2022 Baldor-Reliance® 501
A brand trusted for motor reliability

2022 Baldor-Reliance® 501 standard motor catalog

Effective 02/22

Sustainability and energy management

Energy efficiency is the invisible climate solution, and we're leading the way by introducing motors that are premium and ultra-premium efficient. We continue to encourage our customers to use a drive wherever variable speed and loads cause inefficiencies – to use only the electricity that is needed for their operations. Together, we can lead the world to a low-carbon future.

Join us in our energy efficiency movement.

Baldor-Reliance®

Sustainable, IE5+ ultra-premium efficient motors

Critical Cooling
Highest bearing protection available in NEMA Premium® (IE3) and ultra-premium (IE5) designs
(HVAC section)

EC Titanium™
IE5 ultra-premium efficient integrated motor and drive
Additional C-Face and plenum use additions
(Variable speed section)

ABB Ability™
for hazardous locations
Condition monitoring for motors
(Service section)

What's new

Severe Duty XT motor
Completing our offering of severe duty motors
(Severe duty section)

Food Safe with AEGIS® shaft grounding ring
Additional bearing protection for our stainless-steel encapsulated C-Face motors
(Washdown section)

Explosion proof motors
Completing our offering of general purpose, severe duty and drill rig duty motors
(Explosion proof section)

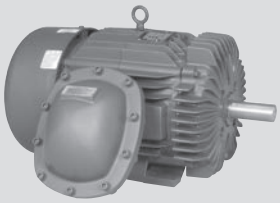

RPM AC
Generation 3 extends our offering thru 1750Hp and include shaft grounding brushes as standard
(Variable speed section)

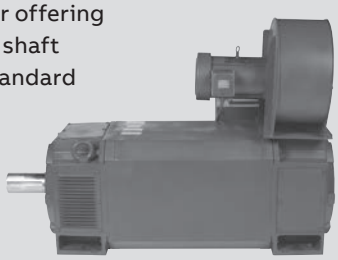

Baldor-Reliance® motor's 100+ year history

- **1920** – Edwin Ballman and Emil Doerr founded Baldor Electric Company in St. Louis, MO

- **1976** – Baldor was recognized by the Federal Agency Administration for design and manufacture of high efficiency motors
- **1978** – Baldor produced its 1 millionth motor

1900 | 1910 | 1920 | 1930 | 1940 | 1950 | 1960 | 1970

- **1904** – Lincoln Electric was formed and later became Reliance Electric
- **1905** – Lincoln Electric introduced the first adjustable speed DC motor

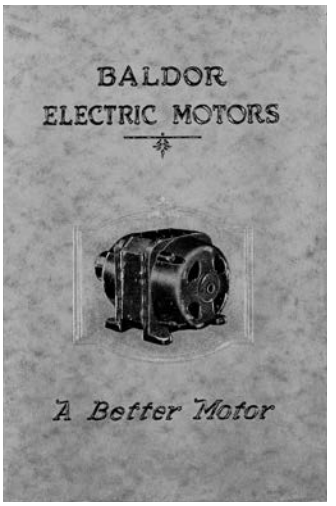

- **1956** – Baldor opened its first AC motor plant in Fort Smith, AR

Our **mission** is to be the best, as determined by our customers, marketers, designers and manufacturers of industrial electric motors.

- You determine what is best
- You grade our papers every day
- We will continue to work with customers to determine the motors they, and the industry, need.
- We want to design and build our own motors
- We want to provide you with the most preferred industrial motors

- **1980** – The Mission Statement and Value Formula were introduced
- **1983** – The Super-E® premium efficient motor line was introduced

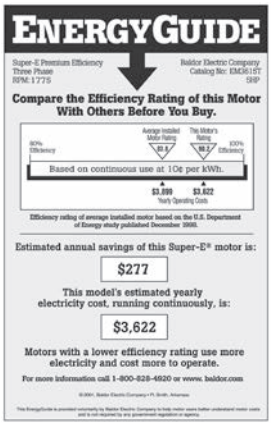
ENERGYGUIDE

Super-E Premium Efficiency
Three Phase
RPM: 1775

Baldor Electric Company
Catalog No: EM3615T
5HP

Compare the Efficiency Rating of this Motor With Others Before You Buy.

80% Efficiency — Average Installed Motor Rating 85.5 — This Motor's Rating 88.5 — 100% Efficiency

Based on continuous use at 10¢ per kWh.

$3,899 — $3,622
Yearly Operating Costs

Efficiency rating of average installed motor based on the U.S. Department of Energy study published December 2002.

Estimated annual savings of this Super-E® motor is:

$277

This model's estimated yearly electricity cost, running continuously, is:

$3,622

Motors with a lower efficiency rating use more electricity and cost more to operate.

For more information call 1-800-828-4920 or www. baldor.com

© 2001, Baldor Electric Company • Ft. Smith, Arkansas

This EnergyGuide is provided voluntarily by Baldor Electric Company to help motor users better understand motor costs and is not required by any government regulation or agency.

- **2011** – Baldor joined the ABB family, creating the largest industrial motor company in the world
- **2020** – The EC Titanium™ IE5 integrated motor drive was introduced

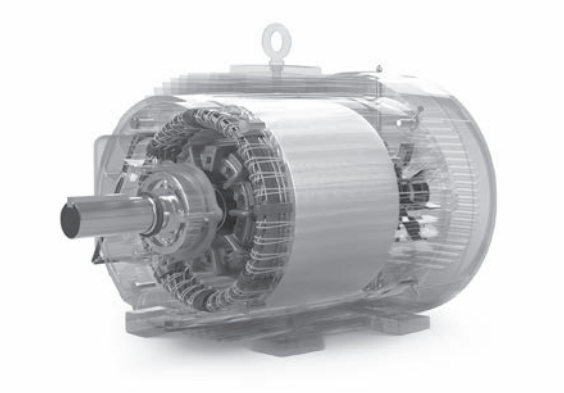

1980
1990
2000
2010
2020

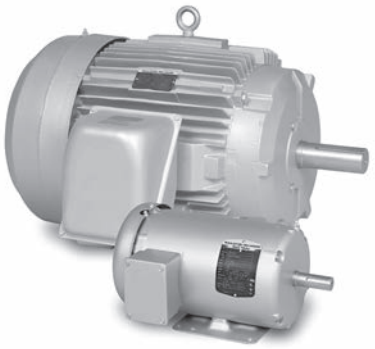

- **2001** – Baldor introduced the EnergyGuide label to the industrial motor market
- **2007** – Reliance® joined the Baldor family
- **2017** – ABB Ability™ smart sensor for motors was introduced
- **2018** – Food Safe motors were introduced

The years ahead – The investments are being made, the tools are being implemented.

The next 100 years will bring a more innovative way of marketing, designing and manufacturing industrial electric motors.

We want to provide you more **perceived value** than you get from other motor manufacturers.

$$V_p = \frac{Q_p \times S_p®}{C \times T}$$

Q The motor you receive should perform exactly as you expect it to. We do that with a clear understanding of your needs, well-engineered designs, and advanced operational technologies and processes.

S We offer 24/7 local sales support, information, inventory, and technical support.

C A reliable, efficient and safe motor reduces the lifetime cost of your processes and equipment.

T Receive information, support and your motor where and when you want it.

Innovation. Availability. Durability. Everything counts.

All Baldor-Reliance motors meet or exceed all efficiency requirements for US, Canada, and Mexico regulations. In addition, we comply with government mandated regulations and offer certifications to help our customers comply with motor requirements from around the world.

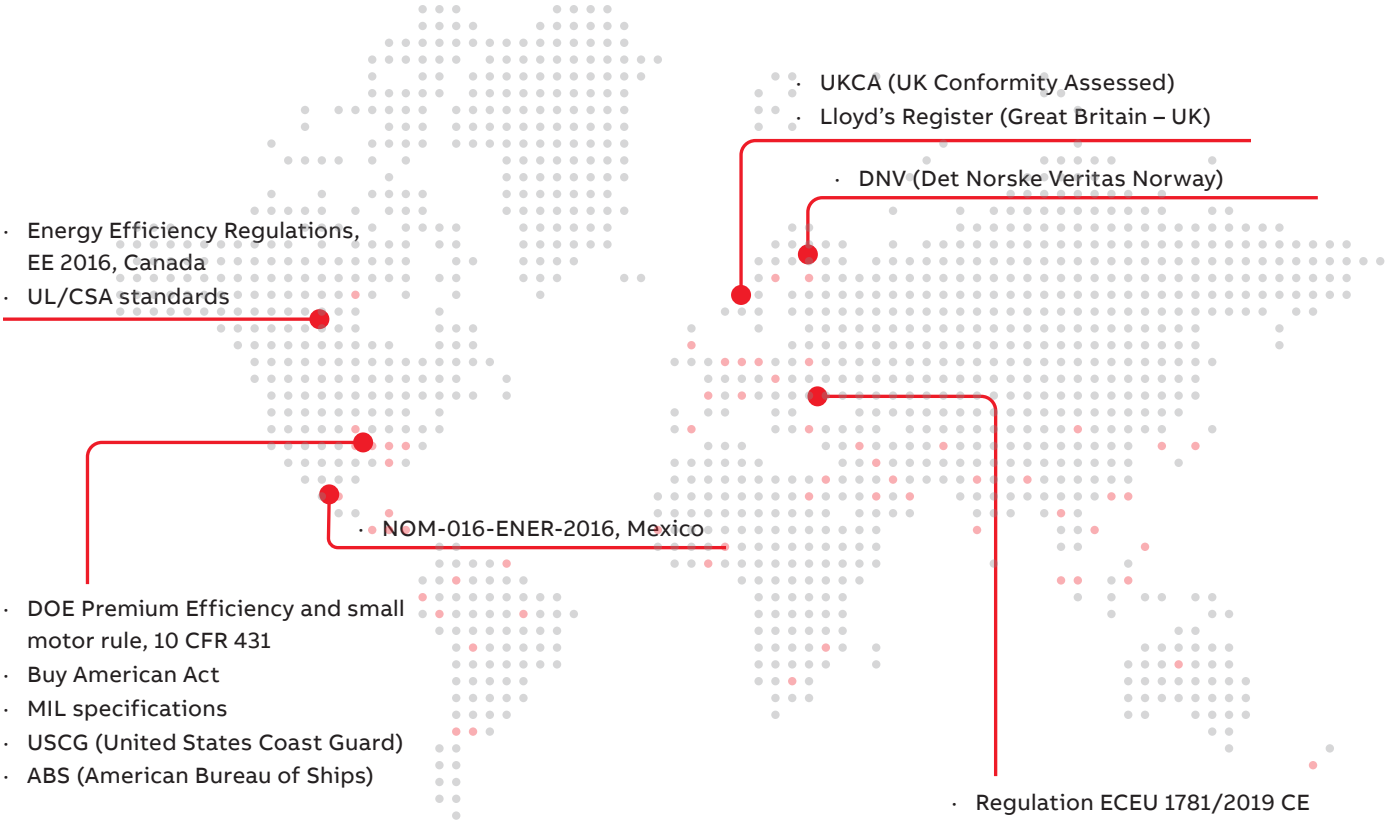

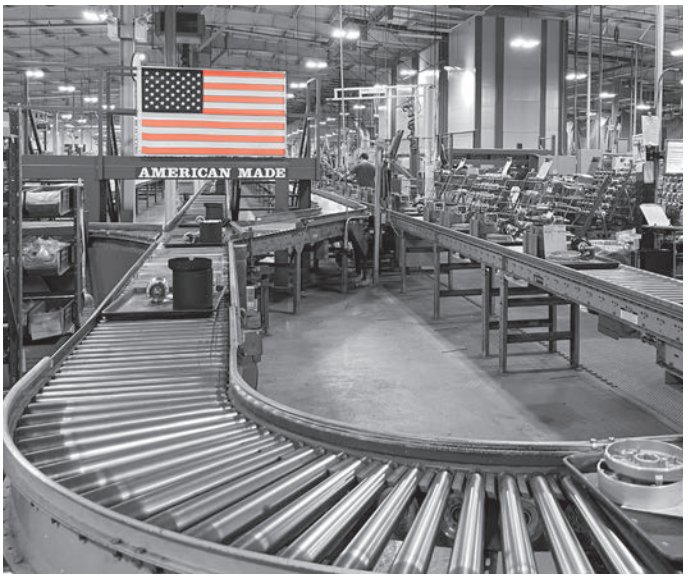

When you choose a Baldor-Reliance® motor, you get a motor backed by more than 100 years of efficiency and performance. Our motors are designed and built in Arkansas, Georgia, Mississippi and Oklahoma, and our employees are committed to quality so that we can provide a reliable motor every time.

Every day, thousands of customers make the choice to trust ABB and Baldor-Reliance motors. Your success is our success, and we will work with you every step of the way to deliver the right motor that exceeds your expectations.

Over 90% of Baldor-Reliance motors meet the Buy American Act.

Find out more here.

Table of contents

General information

1 What's new in this catalog
2 Baldor-Reliance® history
2 Our mission
3 Perceived value
4 Motor compliance
10 Catalog notes
11 Approvals UL and CSA
12 Motors used outside of the United States
13 UL and CSA explosion-proof classifications
14 Abbreviations

General purpose, single and three phase motors

16 Single and three phase general purpose motors key features

General purpose, single phase motors

17 General purpose, single phase, TEFC, foot mounted
19 General purpose, single phase, TEFC, C-Face
20 General purpose, single phase, ODP, foot mounted
22 General purpose, single phase, ODP, C-Face

General purpose, three phase industrial motors

23 General purpose, three phase, totally enclosed, foot mounted
28 General purpose, three phase, totally enclosed, C-Face, foot mounted
31 General purpose, three phase, totally enclosed, C-Face, footless
34 General purpose, three phase, open drip proof, foot mounted
38 General purpose, three phase, open drip proof, C-Face, foot mounted
40 General purpose, three phase, open drip proof, C-Face, footless
41 General purpose, F-2 mount, three phase, TEFC and ODP, foot mounted

Severe duty motors

43 Severe duty motors key features
44 **NEW!** XT severe duty, three phase, totally enclosed, 230/460 volts, 460 and 575 volts, foot mounted
47 **NEW!** XT severe duty, three phase, totally enclosed, 230/460 volts, 460 and 575 volts, C-Face
51 **NEW!** XEX severe duty, three phase, totally enclosed, 230/460 volts, 460 and 575 volts, foot mounted
55 XEX severe duty, three phase, totally enclosed, 230/460 volts, 460 and 575 volts, C-Face
57 841XL, three phase, totally enclosed, 460 volts and 575 volts
60 841XL, three phase, TEFC, 460 volts and 575 volts, C-Face
62 661XL / IEEE 841, three phase, TEFC, 460 volts, foot mounted
63 RPM XE, eXtreme efficient, totally enclosed, 460 volts
64 Dirty Duty Plus, three phase, TEFC
65 Quarry duty motors, three phase, TEFC, Design C, high torque
66 Crusher motors, three phase, TEFC, 460 volts and 575 volts, foot mounted
68 **NEW!** Crusher motors, three phase, TEFC, C-Face, 460 volts, foot mounted
68 Crusher duty conversion base
69 Division 2 capabilities

Large Motors and Generators

74 Large Motors and Generators key features
74 **NEW!** NXR US – Modified to Order (MTO)
74 NXR US Features
75 AXR - Engineered to Order (ETO) / NXR 315 - 500
75 Main specifications
76 General purpose motors
76 N-series
76 Engineered motors
76 A-series
77 ABB Large motor portfolio
77 Rib cooled motors – NXR US, NXR EN, AXR EN, and HXR 560
77 Flameproof motor – AMD
78 Modular induction motors – NMI and AMI
78 Slip ring motor – NMK
78 Synchronous motors – AMS and AMZ
79 ABB Generators portfolio
79 Generators – AMG and AMS
79 Renewable Generators
79 Synchronous Condensers
79 Data Center Generators

Washdown duty motors

80 Washdown duty motors key features
81 Food Safe stainless steel, single phase, C-Face
82 Food Safe stainless steel, three phase, C-Face, foot mounted, encapsulated
84 Food Safe stainless steel, three phase, C-Face, footless, encapsulated
86 **NEW!** Food Safe stainless steel, three phase, C-Face, encapsulated with internal AEGIS® Bearing Protection Ring
87 Food Safe stainless steel, three phase, foot mounted, encapsulated
88 Food Safe stainless steel, three phase, foot mounted, close-coupled pump, encapsulated
89 Food Safe IEC stainless steel, three phase, totally enclosed, encapsulated
91 Stainless steel, three phase, totally enclosed, C-Face, foot mounted
93 Stainless steel, three phase, totally enclosed, C-Face, footless
94 Paint-free, three phase, totally enclosed, C-Face
95 **NEW!** Paint-free, three phase, totally enclosed, C-Face, 575 volt

Table of contents

Washdown duty motors (continued)

96 Inverter Duty motor, paint free, three phase, totally enclosed, C-Face
97 Single phase, totally enclosed, foot mounted
97 Single phase, totally enclosed, C-Face
98 Three phase, totally enclosed, foot mounted
99 Three phase, totally enclosed, C-Face, foot mounted
101 Three phase, totally enclosed, C-Face, footless
102 Three phase, totally enclosed, C-Face, 575 volt
103 Feather Picker motor, three phase, TEFC, encapsulated, foot mounted
103 Feather Picker motor, three phase, TEFC, encapsulated, C-Face, foot mounted
104 Cut Saw motor, three phase, TENV, foot mounted
104 Brake motor, three phase, totally enclosed, C-Face, foot mounted
105 Jet pump, three phase, TEFC, C-Face
106 Close-coupled pump, three phase, totally enclosed, foot mounted
107 Inverter Duty motor, three phase, TENV, C-Face, foot mounted
107 Vector Duty motor, three phase, TENV, C-Face, foot mounted
108 **NEW!** Three phase, totally enclosed, foot mounted, washdown features
109 **NEW!** Three phase, totally enclosed, C-Face, foot mounted, washdown features
110 **NEW!** Close-coupled pump, three phase, totally enclosed, foot mounted, washdown features
110 Washdown lead connection kits

Explosion proof motors

111 Explosion proof motors key features
112 **NEW!** Explosion proof, general purpose, single phase
114 **NEW!** Explosion proof, general purpose, foot mounted, three phase, 230/460 and 575 volts
116 **NEW!** Explosion proof, general purpose, C-Face, three phase, 230/460 and 575 volts
118 **NEW!** Explosion proof, general purpose, brake, three phase
118 **NEW!** Explosion proof, general purpose, close coupled pump, three phase
119 **NEW!** Explosion proof, general purpose, jet pump, single and three phase
120 **NEW!** Explosion proof, general purpose, 50 Hz, single and three phase
121 **NEW!** Explosion proof, severe duty, three phase
123 **NEW!** Explosion proof, drill rig duty, 230/460 and 460 volt
126 **NEW!** Explosion proof, drill rig duty, 575 volt
128 **NEW!** Explosion proof, drill rig duty, single phase
128 **NEW!** Explosion proof, drill rig duty, close coupled pump, 230/460 and 575 volt
129 Division 1 Inverter capabilities

Pump motors

133 Pump motors key features
134 Fire pump, three phase, ODP, foot mounted
136 Fire pump, three phase, ODP, footless, close-coupled pump
138 Jet pump, single phase, TEFC
139 Jet pump, single phase, ODP
140 Jet pump, three phase, TEFC
141 Jet pump, three phase, ODP
142 Washdown, jet pump, three phase, TEFC, C-Face
143 Square flange pump, ODP
144 Close-coupled pump, single phase
145 Close-coupled pump, three phase, foot mounted, with internal AEGIS® Bearing Protection Ring
147 Close-coupled pump, three phase, TEFC
149 Close-coupled pump, three phase, TEFC, footless
150 Close-coupled pump, three phase, ODP
152 Close-coupled pump, three phase, totally enclosed, foot mounted
153 **NEW!** Close-coupled pump, three phase, totally enclosed, foot mounted, washdown features
154 Food Safe stainless steel, three phase, foot mounted, close-coupled pump, encapsulated
155 **NEW!** IEEE 841XL, P-base solid shaft pump, three phase, TEFC
156 P-base vertical solid shaft pump, three phase, TEFC
158 SAE hydraulic pump motors, three phase, TEFC
159 Submersible motors, single phase, TENV
160 Submersible motors, three phase, TENV
162 Submersible motor lead cable assemblies

HVAC motors

163 HVAC motors key features
164 **NEW!** Critical Cooling Motor, Inverter Duty, TEAO, with Sealed Hybrid Ceramic bearing protection
165 **NEW!** Critical Cooling Motor, Inverter Duty, TEFC, foot mounted, with Sealed Hybrid Ceramic bearing protection
166 **NEW!** Critical Cooling Motor, Inverter Duty, three phase, totally enclosed, with FASR rotor technology, with Sealed Hybrid Ceramic bearing protection
167 Super-E®, three phase, TEFC, foot mounted, with internal Baldor-Reliance® Shaft Grounding Brush
169 Super-E®, three phase, ODP, foot mounted, with internal Baldor-Reliance® Shaft Grounding Brush
170 **NEW!** Super-E®, three phase, TEFC, C-Face, foot mounted, with internal AEGIS® Bearing Protection Ring
172 Super-E®, three phase, TEFC, foot mounted, with internal AEGIS® Bearing Protection Ring
174 **NEW!** Super-E®, three phase, ODP, C-Face, foot mounted, with internal AEGIS® Bearing Protection Ring
176 Super-E®, three phase, ODP, foot mounted, with internal AEGIS® Bearing Protection Ring
178 Super-E®, three phase, ODP, foot mounted

Table of contents

HVAC motors (continued)

180 Super-E®, three phase, TEFC, foot mounted
181 Chiller/cooling tower, three phase, TEAO
182 Chiller/cooling tower, three phase, two speed, TEFC
183 **NEW!** Chiller/cooling tower, three phase, TEAO, shaft ground
184 **NEW!** Chiller/cooling tower, three phase, TEFC, shaft ground
185 **NEW!** Chiller/cooling tower, three phase, TEFC, 575V, shaft ground
186 Three phase, TEAO, foot mounted
187 Condenser fan, three phase, ODP, “belly band” round body
187 Condenser fan, three phase, TEAO, “belly band” round body
188 Fan and blower, single and three phase, ODP, resilient base
189 Three phase, ODP
189 (PSC) – direct drive fan, single phase, foot mounted, TEAO
190 Direct drive fan, single and three phase, TEAO
191 Yoke/pedestal fan, single phase, PSC, TEAO
191 Ventilation fan, three phase, TEAO, C-Face, footless

Farm duty motors

192 Farm duty motors key features
193 Super-E®, three phase, TEFC
195 Single phase, TEFC
196 Single phase, TEAO, foot mounted
197 Grain dryer/centrifugal fan, single and three phase, TEFC and ODP
198 Grain dryer/vane axial fan, single and three phase, TEAO and OPAO
199 Universal crop dryer, single phase, PSC (switchless), OPAO
200 Auger drive, single phase, TEFC, flange mount, capacitor start
200 Grain stirring, single phase, TEFC, foot mounted
201 Instant reversing, single phase, TEFC, foot mounted
201 Aeration fan, single and three phase, TEAO, foot mounted
202 (PSC) – direct drive fan, single phase, TEAO
202 Dairy/vacuum pump, single phase, TEFC, foot mounted
203 Metering pump, three phase, TEFC, foot mounted
203 Incubator/hatchery vent fan, single phase, TEAO

Definite purpose motors

204 Ammonia refrigeration compressor motors, three phase, ODP, 460 volt, foot mounted
205 Three phase, two speed, TEFC, foot mounted
207 Three phase, two speed, ODP, foot mounted
208 Pressure washer, single phase, TEFC and ODP
209 U-frame, three phase, TEFC
210 U-frame, single phase
211 Automotive duty, three phase, TEFC, foot mounted

Unit handling motors

212 Single and three phase, C-Face, TEFC
213 High cycle brake motor, three phase
214 D-series brake motor, three phase, totally enclosed
215 Short series brake motor, three phase, TEFC

Brake motors

216 Single and three phase, TEFC
218 Single and three phase, TEFC, C-Face, fan on drive end
219 Single and three phase, TEFC and open, Dings brake
220 Three phase, ODP
221 Washdown, three phase, totally enclosed, C-Face, foot mounted
221 Double C-Face motor brake kits

IEC frame motors

222 IEC LV motors product portfolio
223 Process Performance IEC aluminum, three phase, 50/60 Hz, 400/460VY
226 Process Performance IEC cast iron, three phase, 50/60 Hz, 400/460V
229 **NEW!** Metric IEC flanges for Process Performance aluminum (M3AA) and cast iron (M3BP) motors (safe area)
230 Food Safe IEC stainless steel, three phase, totally enclosed, encapsulated, 50/60 Hz, 400/460VY
232 **NEW!** IEC Zone 2 & 22 and Div 2 Increased Safety, three phase, 50/60 Hz
233 **NEW!** IEC Zone 1 Flameproof, three phase, 50/60 Hz, for export only
234 Metric IEC, three phase, 60 Hz, TEFC, foot mounted
235 Metric IEC, three phase, 60 Hz, TEFC, B5 flange
236 Metric IEC, three phase, 60 Hz, TEFC, B14 face

50 Hertz motors

237 Single phase, NEMA frame, TEFC and ODP, foot mounted
238 Three phase, NEMA frame, TEFC and ODP, foot mounted
239 Single and three phase, NEMA frame, TEFC, C-Face

Variable Speed AC motors

240 Variable Speed AC motors key features
241 Variable Speed AC motors – Speed range capabilities
242 **NEW!** EC Titanium™ motor, Inverter Duty, three phase, totally enclosed
243 **NEW!** EC Titanium™, Top Mount Integrated Drive Motor, three phase, totally enclosed
245 **NEW!** EC Titanium™, Axial Mount Integrated Drive Motor, three phase, totally enclosed
247 **NEW!** EC Titanium™, Plenum Use, Aluminum Housing and Fan Cover, Non-Bluetooth Drive
248 **NEW!** EC Titanium™ programming keypad and cable kits
249 RPM AC, Inverter Duty, three phase
251 RPM AC, Vector Duty, three phase, totally enclosed

Table of contents

Variable Speed AC motors (continued)

252 Encoder feedback kits
252 Encoder feedback kits RPM AC designs
253 Encoder mounting kits – no encoder
254 RPM AC slide bases
255 RPM AC filter kits
255 RPM AC mounting conversion kits for FL180 - FL280 frames
256 Replacement blower kits for DPG-FV RPM AC motors
256 **NEW!** Roller bearing kits for RPM AC motors
257 V*S Master Inverter Duty motors, three phase, totally enclosed
259 V*S Master Vector Duty, three phase, totally enclosed
261 V*S Master severe duty vector drive, three phase, totally enclosed
262 V*S Master encoder feedback kits 360 - 440 frame size
263 Feedback cable assembly with MS connector
263 Connector transition (patch) cables
264 Encoder feedback kits for IDM, IDNM and IDWNM motors
265 Constant velocity blower cooling conversion kits

DC motors and controls

266 DC motors key features
267 SCR drive fractional permanent magnet motor, TENV and TEFC, C-Face with base
268 Integral DC tach permanent magnet SCR drive motor – TENV and TEFC, C-Face with base
268 Explosion proof permanent magnet SCR drive motor – TEFC, C-Face with base
269 Washdown duty permanent magnet SCR drive motor – TENV and TEFC, C-Face with base
269 Paint free washdown duty permanent magnet SCR drive motor, TEFC, C-Face with base
270 Metric flange permanent magnet SCR drive motor, TENV and TEFC, flange and face mount
271 Low voltage permanent magnet motor – TENV and TEFC
271 DC power motor – TEFC – right base
272 Shunt wound SCR drive motors, TEFC, C-Face with base
273 Shunt wound SCR drive motors, explosion proof, TEFC, C-Face with base
274 RPM III DC shunt wound SCR drive motors, 180V armature, power code K
274 RPM III DC shunt wound SCR drive motors, 240V armature, 240V field, power code C
275 RPM III DC shunt wound SCR drive TEFC motors, 240V and 500V armature, power code C
276 RPM III wound field SCR drive DPG-FV motors, 240V and 500V armature, power code C
277 RPM III wound field SCR drive DPG motors, 240V and 500V armature, power code C
279 RPM III DC motor encoder and tachometer kits
279 Encoder and tachometer mounting kits (less tach)
280 Blower kits for use with RPM III DC motors
280 Filter kits for use with DPF-FV, RPM III DC motors
280 Sliding Bases for RPM III DC motors
281 SCR drive motors, shunt wound – DPFG, self ventilated, rigid base
282 SCR drive motor, shunt and stabilized shunt wound DPBV enclosure – rigid base
282 SCR drive motor, 240V armature – 240V field shunt wound DPFG – Self-ventilated rigid base and C-Face
283 Shunt wound SCR drive motor – TEFC, rigid base
283 Lifting magnet generators
285 Tach mounting kits and cooling blowers for DC integral Hp motors
286 Tach generators DC, AC and digital output
287 Field conversion tach mounting kits for permanent magnet and shunt wound motor
288 NEMA 1 enclosed DC controls for PMDC and shunt wound motors
288 DC control accessories
289 Chassis mount DC controls
290 Plug-in horsepower resistor and fuse kit
291 NEMA 4X DC control and accessories
291 DC SCR NEMA 4X DC control accessories
292 Line regenerative DC controls
292 Line regenerative DC control accessories
293 NEMA enclosed DC control specifications

Motor accessories

295 C-Face kits for field conversion NEMA AC motor
297 C-Face kits for field conversion NEMA DC SCR drive motor
297 Double C-Face motor brake kits
298 Conduit box kits
299 D-Flange kits
299 Drain fitting kit
300 Drip covers for field conversion – Standard ODP motors to vertical mount
300 **NEW!** Drip covers for field conversion – Standard TEFC motors
301 Cast iron fan cover for field conversion – Standard TEFC cast iron motors
301 Cast iron fan cover and conduit boxes for field conversion – Standard TEFC cast iron motors
302 Adjustable motor bases
302 Bushing kit
303 Adjustable motor bases dimension diagrams
304 Conversion bases
304 Conversion bases dimension diagrams

Table of contents

Service

305 ABB Motors and Generators PG Service
305 Base Service
306 Preventive Maintenance
306 Air Gap Inspection
307 Spares and Consumables
307 Replacements
308 ABB Ability™ Advanced Services
308 ABB Ability™ Condition Monitoring for LV Motors
308 ABB Ability™ Condition Monitoring for Pumps
309 Standard Performance Smart Sensors for motors
309 High Performance Smart Sensors for motors
309 Mounting hardware – Standard and High Performance motor Smart Sensors
309 Subscription – Standard and High Performance motor Smart Sensors
309 Subscription – High Performance motor Smart Sensors
309 Smart Sensor Gateway
310 ABB Ability™ Condition Monitoring for HV Motors
310 ABB Ability™ Condition Monitoring for Shaft Lines
311 ABB Ability™ LEAP for HV Motors and Generators
311 ABB Ability™ Condition Assessment for Motors and Generators
312 ABB Ability™ Predictive Maintenance for Generators

Grinders

313 Industrial Grinders
316 Industrial Tool Grinders
317 Industrial Belt Sanders
317 Industrial Buffers
318 Big Red Grinders
318 Big Red Accessories
319 Accessories – Grinder and Buffer
319 Dust Control Units
319 Dust Collector Bags
320 Grinder and Buffer Accessories
321 Grinder Wheels
321 Buffing Wheels
321 Wire Brush Wheels
322 Polishing Lathes
322 True-Running Chucks

Mod Express®

323 Motor Mod Express®
358 ABB Motor Mod Express®

Index

366 Product Index

Quick reference charts

416 IEC quick reference chart
416 NEMA quick reference chart (inside back cover)
416 LAC quick reference chart (outside back cover)

Catalog notes

Customers have easy access to additional data and information by visiting baldor.abb.com.

- Local sales offices
- Authorized distributors
- Sales terms & conditions
- Freight policy
- Warranty information
- Authorized service centers
- Product literature
- Energy efficiency
- Performance data
- Connection diagrams
- Dimension sheets
- Installation manuals
- Renewal parts
- Customer product education

501 catalog notes:

Efficiencies – Efficiencies of all 60 Hz motor designs are listed as NEMA nominal at full load (Except the motors designed to meet the Small Motor Rule average efficiencies as specified by the US Department of Energy (DOE).

Full Load Amps (FLA) – For low voltage amps, double high voltage amps shown, excluding medium voltage amps for 2300/4000 voltage.

Motor bearings – Motors with ball bearings are suitable for coupled loads. If a load is belted, a roller bearing may be required, contact your local sales office if you have questions or need assistance.

Service factor – NEMA T-frames in TEFC construction have a service factor of 1.15 or greater except where noted. All NEMA U- frame TEFC motors (except explosion-proof) have NEMA open service factors. Fractional horsepower TEFC motors have NEMA open service factors. All Inverter Duty and Vector Duty AC motors have 1.0 Service Factors. All DC motors have 1.0 service factors.

Mounting holes – Most steel band and cast iron foot-mounted motors have dual mounting holes (143T-145T, 182T-184T, etc.)

F1/F2 – All cast iron motors are built with symmetrical frames which may be converted from F1 to F2 by switching endplates and rotor from end-to-end except for L182T, L184T, L213T, L215T and L449T. TEFC 5000 and 5800 frame motors are field convertible from F1 to F2 via swingarm. Frames with the "L" prefix have standard NEMA base and BA dimensions. Also applies to TC versions of these frame sizes.

DC SCR drive motors – Field Amps listed are for high voltage connections with motor at operating temperature.

Modified motors – Using stock motors, ABB can modify motors to fit a variety of applications in only 2 to 5 working days for most modifications. Please see the Mod Express section in this catalog for more information.

Custom motors – For information on motor designs and capabilities not found in this catalog, please contact your local sales office.

IP Protection – Baldor-Reliance® enclosures (1)
Open motor enclosures:
IP22 or 23 - Open drip proof AC or DC motors

Totally enclosed motor enclosures*:
IP44 - LV General purpose AC or DC motors **
IP54 - LV Severe Duty XT motors
IP55 - ABB IEC motors
Severe duty AC motors (ECP)
Crusher, Quarry & Dirty Duty Plus motors
White Washdown & Paint-Free motors
IP56 - LV Motors meeting IEEE 841
Dirty Duty Plus motors
Feather Picker motors
Stainless steel motors (non-encapsulated)
IP69 for Water -
Food Safe Stainless steel encapsulated motors

Notes:
(1) Codes are not included on stock motor nameplate as standard.
* Totally enclosed motors will meet IP protection level indicated when drain plugs and or T-drains are properly installed.
** IP54 when drain fitting kit #HA5027A03 is installed in the weep holes (48 thru 256T frame motors only)

Summary of IP protection numbers

First # Protection Against Solid Objects		Second # Protection Against Liquids	
IP	Tests	**O**	No Protection
O	No Protection	**1**	Protection against vertical drops of water. (E.G. Condensation.)
1	Protection against solid objects up to 50 mm. (E.G. Accidental touch by hands.)	**2**	Protection against falling water up to 15 degrees from the vertical.
2	Protection against solid objects up to 12 mm. (E.G. Fingers)	**3**	Protection against falling water up to 60 degrees from the vertical.
3	Protection against solid objects over 2.5 mm. (E.G. Tools, Wires)	**4**	Protection against splashing water from all directions, limited ingress.
4	Protection against solid objects over 1 mm. (E.G. Tools, Wires, and Small Wires)	**5**	Protection against low pressure jets of water from all directions, limited ingress.
5	Protection against dust - limited ingress (No harmful deposits)	**6**	Protection against strong jets of water. (E.G. Use on ship decks, limited ingress.)
6	Totally protected against all dust.	**7**	Protection against immersion.
		8	Protection against submersion.
		9	Protection against high pressure, high temperature spray of water from all directions

Contact your local sales office for clarification, assistance or additional information on any Baldor-Reliance or ABB product. A listing of the offices can be found on baldor.abb.com

Approvals UL and CSA

Approvals for AC Motors, Explosion Proof, and DC Motors:

File #:	Description:	Description:
E10822	UL Listed Explosion Proof AC Motors	182T - 449T Frames
		5008, 5010, 9540 Frames
		140TY - 440TY Frames - Submersible Water-Sewer Pump motors
		182T - 286T Frames – Shaker Duty motors
	UL Listed Explosion Proof DC Motors	1811AT - 259AT Frames
		327AT - 3610A Frames
		408AT - 409AT Frames
E481231	UL Listed Fire Pump Motors	140 - 440 Frames, up to 400 Hp
E27506	UL Recognition for Thermally Protected motors	42 - 250 Frames - Subfractional thru 20 Hp motors
E37609	Special Explosion Proof conduit boxes	
E46145	UL Recognition for DC frames	42 - 184 Frames – Subfractional Motors and Gearmotors
	UL Recognition for NEMA frames	42 - 449 Frames
E54825	UL Recognition for AC frames	180 - 5800 Frames
		L180 - DL2814 Frames
	UL Recognition for DC frames	48 - 4013AT Frames
E6881	UL Listed Explosion Proof DC Motors	56 Frame
E6951	UL Listed Explosion Proof AC/DC Motors	48 - 449 Frames – Subfractional thru 300 Hp motors
EEV79350	CSAc-us EEV Certification (Energy Efficiency Verification)	1 - 500 Hp Motors
EEV78389		
LR19467	CSA Certified Explosion Proof (Division 1)	140TY - 440TY Frames
		180 - 449T Frames
	CSA c-us Certified Explosion Protected (Division 2)	180 - 449T Frames
LR22553	CSA Certification for Explosion Proof motors	48 - 215 Frames
	CSA c-us Certified Explosion Protected (Division 2)	56 - 364T Frames
LR2262	CSA Certification for DC frames	42 - 184 Frames
	CSA Certification for NEMA frames	42 - 449 Frames
LR40567	CSA c-us Certification for AC frames	L180 - DL2814 Frames – 32-1000 Hp
	CSA c-us Certification for DC frames	48 - 4013AT Frames – 5-500 Hp
	CSA c-us Certification for MG Sets	7MG - 80MG Frames – 15-150 Hp
	CSA c-us Certification for NEMA frames	140TY - 360TY Frames – Submersible and Immersible motors
LR46877	CSA c-us Certified Explosion Proof (Division 1)	L180 - L440 frames – TEPV Type X Purge Motors
	CSA c-us Certified Explosion Protected (Division 2)	L180 - DL2814 Frames
LR48703	CSA Certification for Explosion Proof motors	
LR52580	CSA Certification for Explosion Proof motors	447T - 10840 Frames up to 7200 Volts
	CSA Certification for AC frames	C4412 - B1610 Frames – 100-3000 Hp
LR53258	CSA c-us Certification for DC frames	447T - 9600 Frames up to 7200 Volts
LR60344	CSA c-us Certified Explosion Protected (Division 2)	447T - 10840 Frames up to 14000 Volts
LR63415	CSA Certification for Explosion Proof motors	
LR6451	CSA c-us Certification for AC frames	5800 - 10840 Frames – 1000-10000 Hp
LR6771	CSA Certified AC Division 1	
EEV78389	CSA EEV Certification (Energy Efficiency Verification)	1 - 500 Hp
LR7861	CSA c-us Certification for NEMA frames	180 - 449 Frames – 600 Hp max.
LR40567	CSA c-us Certification for NEMA frames	180 - 449 Frames – 600 Hp max.

Motor Designs built at Athens and Gainesville Plants.

Motor Designs built at Westville, Fort Smith, Ozark, and Columbus Plants.

Motor Designs built at Athens, Gainesville, Westville, Fort Smith, Ozark, and Columbus Plants.

Department of Energy (DOE) Compliance Certification: CC 010A

Motors for use in Canada meet NRC Canadian Standards for Efficiency.

DC Tachometers

XPY tachometers are UL recognized, file number E109527 and CSA listed file number LR36841-5.

DC SCR Controls and Accessories

BC-series SCR controls are UL/cUL Listed, file number E114039.

Motors used outside of the United States

Use of motors outside of North America

ABB is capable of supplying a wide range of electric motors suitable for use throughout the world. Both NEMA and IEC designs are available in a wide range of voltages, frequencies, mountings and certifications.

Compliance is not only about a regulated efficiency level to comply with MEPS but in many countries the motors must be certified and show a specific marking or documentation to allow importation and use. Such certification may be testing for efficiency in approved labs within that country. Usually these tests are done by spec and not for a wide ranging family. To avoid later confusion, addressing compliance needs and certifications should be done during the quote process, not after.

Please feel free to contact your local sales office for assistance in determining what needs to be done to make your export motor compliant.

60 Hz motors marked with 50 Hz data

Certain motors may have secondary 50 Hz nameplate data either at rated or reduced output power. Since most motors in this CA501 catalog are designed as 230/460 V, 60 Hz, on 50 Hz many of these motors are rated as 190/380 V. The efficiency on such motors is usually lower on 50 Hz than on 60 Hz and may not be compliant in all countries. Just because these motors are 50 Hz, they may not be CE compliant.

Please feel free to contact your local sales office for assistance in determining what needs to be done to make your export motor compliant.

European Union (EU) – CE compliance

Ecodesign Regulation (EU) 2019/1781 sets minimum efficiency levels for both direct-on-line (DOL) rated low voltage motors and variable speed drives. It repeals and replaces Regulation 640/2009, setting new and more demanding requirements.

As of July 1, 2021 motors from .75 kW to 1000 kW (1 to 1300 Hp, 2, 4, 6, and 8 pole up to 1000V) sold in Europe will require IE3 efficiencies. Motors .12 kW up to .75 kW will require IE2 efficiencies as a minimum. Additionally the motors need to have a CE mark. There is no formal registration process for motors sold for use in the EU.

Motors within the scope of the regulation that are to be used on adjustable speed drives now require IE3 efficiencies.

Hazardous location motors (except Ex eb increased safety), brake motors, TEAO and 8 pole motors are no longer exempt from the EU regulations. These motors now require IE3 efficiencies.

Note that specific motor construction and marking requirements beyond the motor efficiency level are required for CE compliance. These include nameplate markings, which IEC standards are referenced for compliance, earth ground symbol, IEC lead marking, half and three quarter efficiency levels (posted to literature or website), and more.

Please feel free to contact your local sales office for assistance in determining what needs to be done to make your export motor compliant.

UL and CSA explosion-proof classifications

CAUTION! Motors misapplied in hazardous environments can cause a fire or explosion resulting in destruction of property, serious injury or death. Only the end user or a qualified underwriter is to identify and select the proper class, group, division, and temperature code motor to meet the requirements of each installation. ABB personnel can advise what listings and approvals Baldor-Reliance® and ABB motors carry, but cannot evaluate nor recommend what motors may be suitable for use in hazardous environments.

1. **Hazardous Locations —** For details on area classification and equipment suitability please consult NFPA70™ National Electric Code® Articles 500-516.
   - **Class I Group C —** locations are those which contain flammable gas, vapor, combustible liquid produced vapor mixed with air that may burn or explode, either having a maximum experimental safe gap (MESG) value greater than 0.45 mm and less than or equal to 0.75mm or a minimum igniting current ratio (MIC ratio) greater than 0.40 and less than or equal to 0.80. Ethylene is a typical Group C gas. For other substances in this group, please consult NFPA 497.
   - **Class I Group D —** locations are those which contain flammable gas, vapor, combustible liquid produced vapor mixed with air that may burn or explode, either having a (MESG) value greater than 0.75 mm or a (MIC ratio) greater than 0.80. Propane is a typical Group D gas. For other substances in this group, please consult NFPA 497.
   - **Class II Group E —** locations with atmospheres containing combustible metal dusts such as aluminum, magnesium and their alloys or other combustible dusts with particle sizes and conductivity that present similar hazards. For other substances and guidance relative to this group, please consult NFPA 499.
   - **Class II Group F —** locations with atmospheres containing combustible carbonaceous dusts with more than 8% entrapped volatiles. Coal, carbon black, charcoal and coke dust are examples from this group. For other substances and guidance relative to this group, please consult NFPA 499.
   - **Class II Group G —** locations with atmospheres containing combustible dusts not included in Group E or F, including flour, grain, wood, plastic and chemicals. For other substances and guidance relative to this group, please consult NFPA 499.
2. Class II Temperature Codes are typically the lower of either the ignition temperature of the combustible dust that is present or 165°C. Low surface temperature requirements (higher temperature codes) in Class II F&G require that over temperature protection be used.
   - Class II Explosion-proof motors rated 1 1/2 Hp or less have internally mounted automatic thermal overloads when indicated by suffix "A". Caution must be observed when applying these to machinery applications to prevent accidental injury should the thermal device automatically reset and restart the motor.
   - Class II Explosion-proof motors rated 1 Hp and larger without automatic thermal overloads have thermostats in the windings. These thermostats are pilot circuit devices to be connected to the magnetic starter circuit.
3. Motors for use in Class I only locations may be provided without T-stats. In these cases, the T-Code is determined by the maximum external surface temperature of the motor enclosure at the point when the winding burns out. These motors have T-Codes T2A or T2B depending on design, and require special sacrificial insulation. Consult ABB for the acceptability of a requested T-code for specific designs. When motors for use in Division 1 areas (Class I and/or Class II) are provided with T-stats (Over temperature devices) the over-temperature protection must be utilized. If accepted by the AHJ (Authority Having Jurisdiction) other means of limiting the temperature may be utilized in the application. Such alternate protection means are the responsibility of the end user, and ABB does not accept any responsibility for them.
4. Surface temperatures of Baldor-Reliance explosion-proof motors will not exceed the following UL and CSA maximums under fault conditions.
   The "T" Code identifies the maximum absolute motor surface temperature that will be developed under all conditions of operation.
   - Division 1 considers external surface temperature and includes overloads and locked rotor conditions.
   - Division 2 considers internal and external surface temperatures during normal operation.

Maximum surface temperature	US (NEC 500) CA (CEC Annex J)	US (NEC 505) CA (CEC Section 18)
450° C	T1	T1
300° C	T2	T2
280° C	T2A	–
260° C	T2B	–
230° C	T2C	–
215° C	T2D	–
200° C	T3	T3

Maximum surface temperature	US (NEC 500) CA (CEC Annex J)	US (NEC 505) CA (CEC Section 18)
180° C	T3A	–
165° C	T3B	–
160° C	T3C	–
135° C	T4	T4
120° C	T4A	–
100° C	T5	T5
85° C	T6	T6

5. Stock Motors are not suitable for applications in temperatures below -25°C (-13°F). Custom motor designs available for applications in temperatures down to -60°C. Contact your local Sales office for further information.
6. All Baldor-Reliance explosion-proof motors are supplied with Explosion-Proof UL and CSA approved conduit boxes as standard.
7. Most Baldor-Reliance three phase AC explosion proof motors, are approved for use on adjustable speed drives. Only explosion proof motors with adjustable speed information on the motor nameplate can be used. Custom explosion proof ratings are available, contact your local sales office for more information.
8. Baldor-Reliance Division 1 and Division 2 motors are certified for hazardous locations in the North American market, to the Class and Division system. When these motors also carry a CE mark, it is CE marked only for Electrical Safety, to the Low Voltage Directive, 2014/35/EU and has not been certified nor marked for the ATEX Directive, 2014/34/EU.

Baldor-Reliance Explosion Proof motors in this catalog use the following symbols to designate their Division 1, Class and Group certification capabilities. These assignments are for use with this version of the 501 catalog only.

XP Class & Group Symbol	Description
①	Class I, Group D
②	Class I, Group D, Class II, Group F & G
③	Class I, Group D, Class II, Group E, F & G
④	Class I, Group C & D
⑤	Class I, Group C & D, Class II, Group F & G
⑥	Class I Group C & D, Class II Group E, F & G

Abbreviations

The basic catalog number consists of a letter(s) prefix and several non-significant proceeding numbers. A suffix letter(s) and/or number(s) may also be part of the catalog number. For example L3510 or L3510T. Following is a list of prefix and suffix definitions.

Motors Prefix

AEM	Automotive Motor, three phase
AFL	Aeration Fan Motor, single phase
AFM	Aeration Fan Motor, three phase
ANFL	Auger Fan Motor, single phase
AOM	Air Over Motor, three phase
AP	Subfractional Hp, PM motor
B	Brake motor
BN	Brake motor, TENV enclosure
BTG	Tachometer generator
C	NEMA C-Face with base
CBXM	General Purpose explosion proof, Brake, three phase, C-Face foot mounted
CBXMN	General Purpose explosion proof, Brake, three phase, C-Face foot mounted, TENV
CCPX	Severe Duty explosion proof, three phase, C-Face foot mounted
CD	Wound field DC motor NEMA C-Face with base
CDM	Dirty Duty - three phase, C-Face
CDMG	Lifting magnet generator, C-Face
CDP	PM SCR drive motor
CDPSWD	Paint free washdown PM SCR drive motor C-Face with base
CDPT	PM SCR drive motor with integral tachometer
CDPWD	Washdown PM SCR drive motor NEMA C-Face with base
CDPX	Explosion proof PM SCR drive motor C-Face with base
CDRX	Drill Rig Duty explosion proof, three phase, C-face foot mounted
CDRXL	Drill Rig Duty explosion proof, single phase, C-face foot mounted
CDX	Explosion proof wound Field DC motor, NEMA C-Face
CEL	Super-E® premium efficient motor, single phase, C-Face
CEM	Super-E premium efficient motor, three phase, C-Face
CFC	Condenser fan motor, permanent split capacitor
CFM	Condenser fan motor, three phase
CHC	Direct drive fan motor, permanent split capacitor
CHL	Direct drive fan motor, single phase
CHM	Direct drive fan motor, three phase
CJWDM	Washdown jet pump, three phase, foot mounted
CP	Severe duty motor
CPX	Severe Duty explosion proof, three phase
CR	Crusher duty motor
CSC	Checkout stand motor
CTM	Cooling tower motor, three phase
CXL	General Purpose explosion proof, single phase, C-Face foot mounted
CXM	General Purpose explosion proof, three phase, C-Face foot mounted
CXT	Severe duty XT motor, C-face foot mounted
D	Wound field DC motor
DDC	Direct drive, indoor blower motor, permanent split capacitor
DEL	Dairy/vacuum pump motor, single phase
DM	Dirty Duty - three phase
DRX	Drill Rig Duty explosion proof, three phase
E	Super-E premium efficient motor
ECP	Super-E Severe duty motor
ECP6	IEEE 661 motor
ECP8	IEEE 841 motor
ENCP	Super-E severe duty motor, TENV
ENCP8	IEEE 841 motor, TENV
F	TEFC motor (when special)
FDL	Farm duty motor, single phase
FDEM	Farm duty motor, three phase, premium efficient, standard NEMA frame
FLT	Filter kit
FM	F-2 mounted motor
FP	Fire pump motor
FSWDM	All stainless steel food safe washdown motor, three phase
FSWDL	All stainless steel food safe washdown motor, single phase
FVB	Blower kit
FWDM	Washdown duty motor, TEFC, three phase
GD	Grain dryer centrifugal fan motor
GSL	Grain stirring motor, single phase
HFM	HVAC duty, F-2 mounted connection box, three phase
HIC	Incubator/hatchery vent fan motor, permanent split capacitor
HM	HVAC duty motor, three phase
HPM	Hydraulic pump motor, three phase
IDBRPM	RPMAC Inverter Duty motor – laminated frame, TEBC
IDCSWDM	Inverter Duty motor, paint free washdown, C-Face with base
IDDRPM	RPMAC Inverter Duty motor – laminated frame, DPG-FV
IDFRPM	RPMAC Inverter Duty motor – laminated frame, TEFC
IDM	Inverter Duty motor, TEBC
IDNM	Inverter Duty motor, TENV
IDNRPM	RPMAC Inverter Duty motor – laminated frame, TENV
IDVSM	VS Master Inverter Duty motor
IDVSNM	VS Master Inverter Duty motor, TENV
IDVSWDM	Inverter Duty motor, paint free washown, C- Face less base
IDWNM	Washdown Inverter Duty motor, TENV
IM	Irrigation drive motor
IR	Instant reversing single phase farm motor
J	56J stainless steel threaded shaft with drip cover/jet pump
JM	JM pump shaft and face
JMXM	General purpose explosion proof, three phase, Close Couped Pump
JP	JP pump shaft & face with base/close-coupled pump
JPDRX	Drill Rig Duty explosion proof, three phase, Close Coupled pump
JPM	JP pump shaft and face with base, three phase/close-coupled pump
JS	Square flange pump mount motors with threaded shaft
JXL	General purpose explosion proof, single phase, jet pump
JXM	General purpose explosion proof, three phase, jet pump
K	Model 34 diameter motor with 56 C-Face, less base
L	Single phase motor
M	Three phase motor
MM	Metric dimension motor with base
MP	Metering pump motor, three phase
MVM	Metric dimension motor, flange mount less base, three phase
N	Totally enclosed non-ventilated motor
PCL	Pressure washer motor, C-Face with base, single phase
PFTG	Tachometer generator foot mount
PL	Pressure washer motor, single phase
PSC	Permanent split capacitor motor
PTG	Tachometer generator
R	Repulsion-start induction-run motor
RBM	High cycle brake motor, three phase
RHM	Definite purpose HVAC motors, three phase
RL	Resilient base motor (cradle mount), single phase
RM	Resilient base motor (cradle mount), three phase
SPM	Synchronous permanet magnet motor
SSEWDM	All stainless encapsulated Super-E washdown motor, three phase
SSWDM	All stainless washdown, three phase
SWDM	Paint free washdown duty motor, three phase
UCC	Universal crop dryer motor, permanent split capacitor, open air over
UCCE	Universal crop dryer motor, permanent split capacitor, TEAO
UCL	Grain dryer/vane axial fan, single phase, open air over
UCLE	Grain dryer/vane axial fan, single phase, TEAO
UCM	Grain dryer/vane axial fan, three phase, open air over
UCME	Grain dryer/vane axial fan, three phase, TEAO
UH	Unit handling motor
UHM	Unit handling motor, three phase
V	NEMA C-Face less base
V2L	Two compartment jet pump motor C-Face less base, single phase
VDRX	Drill Rig Duty explosion proof, three phase, C-face footless
VEM	Super-E premium efficient motor, three phase, C-Face, less base
VHECP	Super-E vertical pump motor, severe duty - normal thrust
VHM	Vertical pump motor - normal thrust, three phase

Abbreviations

Motor Prefix (continued)

VLCP	Vertical pump motor, severe duty – medium thrust
VP	PM SCR drive motor with metric flange or C-Face
VPCP	Vertical pump motor, severe duty – high thrust
VXL	General Purpose explosion proof, single phase, C-Face footless
VXM	General Purpose explosion proof, three phase, C-Face footless
VXT	Severe duty XT motor, C-face footless
WC	West coast fit TCZ
WD	Washdown duty motor
WDBM	Washdown brake motor, three phase
XL	General purpose explosion proof, single phase
XM	General purpose explosion proof, three phase
XT	Severe duty XT motor
YPC	Yoke pedestal fan motor, permanent split capacitor
ZDBRPM	RPMAC Vector Duty motor – laminated frame, TEBC
ZDFRPM	RPMAC Vector Duty motor – laminated frame, TEFC
ZDM	Vector Duty motor, TEBC
ZDNM	Vector Duty motor, TENV
ZDNRPM	RPMAC Vector Duty motor - laminated frame, TENV
ZDPM	RPMAC permanent magnet rotor - laminated frame
ZDVSCP	VS Master severe duty Vector Duty motor
ZDVSM	VS Master Vector Duty motor
ZDVSNCP	VS Master severe duty Vector Duty motor, TENV
ZDVSNM	VS Master Vector Duty motor, TENV
ZDWNM	Washdown Vector Duty motor, TENV
ZDVSNM	VS Master Vector Duty motor, TENV
ZDWNM	Washdown Vector Duty motor, TENV

Kits & Accessories Prefix

BLW	Blower kit
BU	Bushing kit
CBL	Cable assembly
CC	Corrective capacitor bank
EN	Encoder kit
FCD	Drip cover kit
FFC	Fan cover/conduit box Kit
FL	Flange kit
RBT	Roller bearing conversion kit
RES	Resolver feedback kit
TK	Tachometer mounting kit

Motors Suffix

/35	Full 140 frame band diameter
/36	Full 180 frame band diameter
-2	120/240V field
-2/4	200/400 volt winding
-4	460 volt winding
-5	575 volt winding
-8	200 volt winding
-9	NEMA Design C high torque winding
-12	12 leads
-50	Wound for 50 hertz service
-57	230/380-415 volt winding
-58	380-415 Volt Y-start/delta-run
-277	277 volt winding
-2340	2300/4000 volt winding

Motors Suffix (continued)

-AP	Aluminum process performance
-PP	Cast iron process performance
-BG	Baldor-Reliance® shaft ground motor
-BV	Blower vented
-CI	Cast iron frame
-D	Dodge D-series brake
-DI	Dings Brake
-E	Encapsulated windings
-EX1	Ex nA
-EX2	Ex d
-EX3	Ex de
-G	AEGIS® shaft ground motor
-H	56H mounting
-I	Explosion-proof, 1.15 service factor
-NL	Non linear - for VFD use
-P	Partial AC motor excludes pulley endplate
-S	Dodge short-series brake
-TP	Refrigerator fan motor
A	Automatic thermal overload
C	IEC frame B14 face mount
D	IEC frame B5 flange mount
E	New electrical design
L	Long shafted motor with ball bearings that may be converted to have D.E. roller bearing.
LR	Long shafted motor with D.E. roller bearing that may be converted to ball bearings.
M	Manual thermal overload
P	Wound field DC motor NEMA “AT” frame
S	Motor has a short shaft for coupled loads
T	NEMA “T” frame dimensions
TP	Feather picker motor
TR	NEMA “T” frame - roller bearing
TS	NEMA “T” frame - short shaft
Y	Special mounting dimension

Grinders Suffix

D	Deluxe
E	Exhaust guards
W	Wide design

Single and three phase general purpose motors

Single phase and three phase general purpose motors are designed to meet or exceed the energy efficiency requirements of the United States, Canada and Mexico for general purpose industrial motors, while delivering high starting torque, overload capability and superior reliability. The extensive line of General Purpose motors are available in a wide variety of enclosure construction from industrial steel band open designs where water and dust exposure is moderate, to totally enclosed cast iron designs where exposure to water, dust and corrosives exists. Super-E® motors provide NEMA Premium efficiency and are Inverter ready with wide variable torque speed ranges as standard. For motors with features outside the capabilities below, please contact your sales representative.

Key features:

- Baldor-Reliance® motors meet or exceed all efficiency requirements for US, Canada and Mexico regulations
- Super-E® motors suitable for inverter use per NEMA MG1 Part 31.4.4.2
- Designed for longevity with a 3 year warranty on premium efficient Super-E® motors

For Above NEMA General Purpose motors, see ABB NXR US Series in the Large Motors and Generators section.

1/12 - 450 Horsepower

General Purpose product line		Totally enclosed (single phase)	Open (single phase)	Totally enclosed (three phase)	Open (three phase)
NEMA frame	Frame size range for stock products	42-250T	48-210T	42-449T	48-449T
Hp		1/12 - 15	1/6 - 10	1/8 - 400	1/4 - 450
Voltage 60 Hz	115/208-230 or 115/230 volts	S	S	–	–
	200 volts	–	–	S	S
	230/460 volts	–	–	S	S
	460 volts	–	–	S	S
	575 volts	–	–	S	S
	2300/4000 volts	–	–	S	A
Speed	Speed (60 Hz)	3600, 1800 or 1200 RPM	3600, 1800 or 1200 RPM	3600, 1800, 1200 or 900 RPM	3600, 1800, 1200 or 900 RPM
Electrical features					
Efficiency	Baldor-Reliance motors meet or exceed all efficiency requirements for US, Canada and Mexico regulations	S	S	S	S
Torque	NEMA Design B torques (most ratings)	S	S	S	S
Service factor & temp. rise	1.15 service factor – continuous (most ratings)	S	S	S	S
	Class F insulation with Class B rise @ 1.0 service factor	S	S	S	S
Inverter ready	Super E® – meets NEMA MG1 Part 31.4.4.2	–	–	S	S
Electrical connection	6 Lead dual voltage connection	S	S	–	–
	9 Lead dual voltage connection	–	–	S	S
	12 Lead wye delta connection	–	–	S	S
Mechanical features					
IP code	IP22 ingress protection	–	S	–	S
	IP44 ingress protection	S	–	S	–
	IP54 ingress protection (ABB NXR US Series are IP54 as standard)	A	–	A/S	–
Frame	Heavy gauge steel frame	S	S	S	S
	Cast iron frame	A	–	S	A
	Lifting provisions positioned for easy handling in the application (motors over 70 Lbs)	S	S	S	S
Bearings	High performance ball bearings designs	S	S	S	S
	Roller bearing design -TR suffix	–	–	S	A
Lubrication	Super-premium Mobil Polyrex™ EM Series grease	S	S	S	S
Conduit box	Cast aluminum	S	S	S	S
	Gasketed cast aluminum	S	–	S	A
	Gasketed cast iron frame	–	–	S	A
Nameplate	Laser etched nameplate with highly legible font	S	S	S	S
	50 Hz stamping (2, 4, 6 pole 1-125 Hp) on Super E® motors	A	A	S	A
Other key features					
Warranty	Warranty - in number of months from manufacture (NEMA Premium Super E®)	36	36	36	36
	Warranty - in number of months from manufacture	18	18	18	18

S = Standard A = Available through Mod Express or as custom

General purpose, single phase, TEFC, foot mounted

1/12 thru 15 Hp

IP44*

Features:

- Low noise vibration dampening base
- Dynamically balanced rotor to increase bearing life
- Superior switch design provides optimized torque profiles
- Robust heavy gauge steel design

Applications:

- Air handling
- Material handling
- Machine tools
- Conveyors
- Pumps
- Fans

Hp	RPM	NEMA Frame	Catalog Number	List Price	Disc. Sym.	"C" Dim.	Aprx. Wt. (lb)	Full Load Efficiency	Voltage	Full Load Amps	Notes (a)
1/12	1800	42	**L3351**	525	GE1	9.56	15	44	115/230	1	3, 30
1/8	3600	42	**L3352**	537	GE1	9.56	15	45	115/230	1.3	3, 30
	1800	42	**L3353**	547	GE1	9.56	16	47	115/230	1.6	3, 30
1/6	3600	42	**L3354**	563	GE1	9.56	16	52	115/230	1.6	3, 30
	1800	42	**L3355**	596	GE1	9.56	18	51	115/230	1.8	3, 30
		48	**L3400**	594	GE1	10.72	18	49	115/230	1.9	3, 30
	1200	48	**L3401**	837	GE1	10.72	23	47	115/230	2.3	3, 30
1/4	3600	42	**L3356**	603	GE1	9.56	18	57	115/230	2	3, 30
	1800	48	**EL3403**	744	GE1	11.35	24	74	115/230	1.3	1, 13, 65
		48	**L3403**	609	GE1	10.72	20	55	115/230	2.5	3, 30
		48	**L3403M**	698	GE1	10.72	11	55	115/230	2.5	3, 30
	1200	48	**L3404**	891	GE1	11.34	25	48	115/230	3.2	3, 30
		56	**L3500**	935	GE1	12.25	30	52.5	115/230	2.6	3, 30
1/3	3600	48	**L3405**	555	GE1	10.72	21	55	115/208-230	3	3
	1800	48	**L3406**	647	GE1	10.72	22	60	115/230	3	3, 30
		48	**L3406M**	734	GE1	10.72	22	60	115/230	3	3, 30
		56	**EL3501**	822	GE1	11.97	27	77	115/230	1.6	1, 13, 65
		56	**L3501**	626	GE1	11.34	22	60	115/230	3	3, 30
		56	**L3501M**	734	GE1	11.34	22	60	115/230	3	3, 30
	1200	48	**L3407**	980	GE1	11.34	27	54	115/230	3.7	3, 30
		56	**L3502**	980	GE1	11.97	28	54	115/230	3.7	3, 30
1/2	3600	48	**L3408**	627	GE1	10.73	22	66	115/230	3.5	3, 30
		56	**EL3503**	807	GE1	11.97	23	68	115/230	2.5	12, 65
		56	**L3503**	627	GE1	11.35	23	66	115/230	3.5	3, 30
	1800	48	**L3409**	718	GE1	11.34	26	68	115/230	3.7	3, 30
		48	**L3409M**	863	GE1	11.34	26	68	115/230	3.7	3, 30
		56	**EL3504**	970	GE1	11.97	30	78.5	115/230	2.3	1, 12, 65
		56	**L3504**	734	GE1	11.35	27	68	115/230	3.7	3, 30
		56	**L3504A**	878	GE1	11.97	27	68	115/230	3.7	3, 30
		56	**L3504M**	863	GE1	11.97	27	68	115/230	3.7	3, 30
	1200	56/56H	**L3505**	1,388	GE1	12.91	43	62.5	115/230	3.9	3, 30, 36
3/4	3600	56	**EL3506**	907	GE1	11.97	29	72	115/230	3.9	12, 65
		56	**L3506**	706	GE1	11.97	28	66	115/230	4.8	3, 30
	1800	56	**EL3507**	1,179	GE1	13.25	44	82.5	115/208-230	3.2	1, 12, 65
		56	**L3507**	845	GE1	12.47	33	72	115/230	4.2	30, 65
		56	**L3507A**	1,059	GE1	12.47	35	74	115/230	4.1	30, 65
		56	**L3507M**	1,013	GE1	12.47	33	74	115/230	4.1	30, 65
	1200	56/56H	**L3508**	1,607	GE1	12.93	44	73.5	115/230	3.9	2, 30, 36, 65
		143T	**L3508T**	1,581	GE1	13.29	46	73.5	115/230	3.9	2, 30, 65

(a) See notes on inside back flap.
*IP54 when Drain Fitting Kit #HA5027A03 is installed in the weep holes (48 thru 256T frame motors only)

General purpose, single phase, TEFC, foot mounted

Hp	RPM	NEMA Frame	Catalog Number	List Price	Disc. Sym.	"C" Dim.	Aprx. Wt. (lb)	Full Load Efficiency	Voltage	Full Load Amps	Notes (a)
1	3600	56/56H	**EL3509**	1,047	GE1	12.93	38	74	115/208-230	4.7	12, 65
		56/56H	**L3509**	818	GE1	12.93	37	68	115/230	5.9	3, 30, 36
		56/56H	**L3509M**	925	GE1	12.93	40	66	115/230	6	3, 36
	1800	56/56H	**L3510A**	1,191	GE1	12.91	40	67	115/230	6.5	3, 30, 36
		56/56H	**L3510M**	1,149	GE1	12.93	38	67	115/230	6.5	3, 30, 36
		56/56H	**EL3510**	1,355	GE1	13.81	45	82.5	115/230	4.3	1, 36, 65
		56/56H	**L3510**	958	GE1	12.93	41	68	115/230	6.4	3, 30, 36
		143T	**L3510T**	978	GE1	13.29	39	68	115/230	6.4	3, 30
		143T	**L3510TM**	1,149	GE1	13.31	40	67	115/230	6.5	3, 30
1 1/2	3600	56/56H	**L3513**	1,097	GE1	12.93	41	70	115/230	8	3, 30, 36
		56/56H	**L3513M**	1,255	GE1	12.91	46	70	115/230	7.5	2, 3, 36
		143T	**L3513T**	1,075	GE1	13.31	43	70	115/230	8	3, 30
	1800	56/56H	**L3514**	1,107	GE1	13.81	49	80	115/230	6.2	30, 36, 65
		56/56H	**L3514A**	1,411	GE1	13.81	48	75.5	115/230	8	2, 36, 65
		56/56H	**L3514M**	1,298	GE1	13.81	51	75.5	115/208-230	8	2, 36, 65
		56/56H	**EL3514**	1,543	GE1	15.18	58	84	115/230	6.3	1, 36, 65
		145T	**EL3514T**	1,543	GE1	15.55	58	84	115/230	6.3	1, 65
		145T	**L3514T**	1,123	GE1	13.30	44	78.5	115/208-230	7	65
		145T	**L3514TM**	1,298	GE1	14.17	49	75.5	115/208-230	8	2, 65
	1200	184T	**L3613T**	2,934	GE1	16.56	77	73	115/230	8.2	1, 30, 65
2	3600	56/56H	**L3515**	1,400	GE1	13.79	52	74	115/230	11.5	1, 3, 30, 36
		56/56H	**L3515M**	1,466	GE1	13.79	52	74	115/230	11.5	2, 3, 36
		145T	**L3515T**	1,411	GE1	14.19	52	74	115/230	11.5	1, 3, 30
		145T	**EL3515T**	1,810	GE1	14.18	65	77	115/208-230	8.3	1, 65
	1800	56HZ	**L3516TM**	1,848	GE1	13.31	46	82.5	208-230	8.1	1, 57
		145T	**L3516T**	1,793	GE1	14.17	51	78.5	115/230	8.8	1, 65
		182T	**L3605T**	1,602	GE1	16.56	68	75.5	115/230	11.5	3, 30
		182T	**L3605TM**	1,955	GE1	16.56	73	75	115/230	11	2, 3
		182T	**EL3605T**	2,109	GE1	16.56	66	82.5	115/230	8.8	1, 65
3	3600	182T	**EL3606T**	1,969	GE1	16.56	79	82	115/230	12.4	2, 65
		182T	**L3606T**	1,655	GE1	16.56	74	76	115/230	14.5	1, 3, 30
	1800	184T	**EL3609T**	2,462	GE1	18.06	89	85.5	230	11.8	1, 65
		184T	**L3609T**	1,885	GE1	16.56	80	78	115/230	14	2, 20, 30, 65
		184T	**L3609TM**	2,040	GE1	16.54	79	78	115/230	14.5	2, 20
5	3600	184T	**EL3608T**	2,714	GE1	18.06	91	85	230	19.4	2, 20, 65
		184T	**L3608T**	2,276	GE1	18.06	88	83	230	19.5	2, 20, 65
		184T	**L3608TM**	2,348	GE1	18.05	89	83	230	19.5	2, 20
	1800	184T	**EL3612T**	2,936	GE1	18.06	97	86.5	230	19.1	2, 20, 65
		184T	**L3612TM**	1,327	GE1	18.05	100	80	230	23	2, 20
		213T	**L3708T**	2,251	GE1	19.02	116	84	230	20.5	1, 30, 65
		213T	**L3708TM**	2,643	GE1	19.02	135	82	230	21.5	2, 65
7 1/2	3600	213T	**L3709T**	2,931	GE1	17.89	123	83	230	33	2, 30, 65
	1800	215T	**L3710T**	2,972	GE1	19.02	134	86.5	230	29	2, 20, 30, 65
10	3600	215T	**L3711T**	3,593	GE1	19.02	148	82	230	40	2, 20, 65
	1800	215T	**L3712T**	3,647	GE1	20.52	158	86.5	230	38	2, 20, 65
15	1800	254T	**L1177T**	10,387	GE1	23.28	323	86.5	230	60	2, 20, 65
		256T	**L3912T**	9,328	GE1	24.56	303	86.5	208-230	58	

(a) See notes on inside back flap.
Cast iron frame
*IP54 when Drain Fitting Kit #HA5027A03 is installed in the weep holes (48 thru 256T frame motors only)

General purpose, single phase, TEFC, C-Face

1/6 thru 10 Hp

IP44*

Features:

- Locked DE bearing to allow mounting in any configuration
- Low noise vibration dampening base
- Dynamically balanced rotor to increase bearing life
- Superior switch design provides optimized torque profiles
- Robust heavy gauge steel design

Applications:

- Gear reducers
- Material handling
- Machine tools
- Conveyors
- Pumps
- Fans

Hp	RPM	NEMA Frame	Catalog Number	List Price	Disc. Sym.	"C" Dim.	Aprx. Wt. (lb)	Full Load Efficiency	Voltage	Full Load Amps	Notes (a)
C-Face, foot mounted											
1/4	1800	56C	**CL3403**	644	GE1	11.35	20	55	115/230	2.5	3
1/3	3600	56C	**CL3405**	642	GE1	11.35	21	55	115/208-230	3	3
	1800	56C	**CL3501**	672	GE1	11.35	23	60	115/230	3	3, 30
1/2	3600	56C	**CL3503**	673	GE1	11.35	23	66	115/230	3.5	3, 30
	1800	56C	**CL3504**	785	GE1	11.35	28	68	115/230	3.7	3, 30
3/4	3600	56C	**CL3506**	749	GE1	11.97	29	66	115/230	4.8	3, 30
	1800	56C	**CL3507**	937	GE1	12.47	34	72	115/230	4.2	30, 65
1	3600	56C	**CL3509**	866	GE1	12.25	36	68	115/230	5.9	3, 30
	1800	56C	**CL3510**	1,057	GE1	13.25	40	68	115/230	6.4	3, 30
1 1/2	3600	56C	**CL3513**	1,121	GE1	13.25	46	70	115/230	7.5	3, 30
	1800	56C	**CL3514**	1,255	GE1	14.12	51	80	115/230	6.2	30, 65
2	3600	56C	**CL3515**	1,446	GE1	14.12	50	74	115/230	11.5	1, 3, 30
		145TC	**CL3515T**	1,457	GE1	14.19	53	74	115/230	11.5	1, 3, 30
	1800	145TC	**CL3516TM**	1,862	GE1	14.16	53	82.5	208-230	7.9	1
3	1800	184TC	**CL3619TM**	2,422	GE1	16.54	81	81.5	230	13.2	2, 20
5	3600	184TC	**CL3608TM**	2,625	GE1	18.05	92	83	230	19.5	2, 20
	1800	184TC	**CL3612TM**	2,539	GE1	18.05	102	80	230	23	2, 20
7.5	3600	213TC	**CL3709T**	3,343	GE1	18.63	126	83	230	33	2, 20, 65
	1800	215TC	**CL3710T**	3,384	GE1	19.75	127	86.5	230	29	2, 20, 30, 65
10	3600	215TC	**CL3711T**	4,265	GE1	19.75	167	82	230	40	2, 20
	1800	215TC	**CL3712T**	4,316	GE1	21.25	171	86.5	230	38	2, 20
C-Face, footless											
1/6	1800	56C	**KL3400**	626	GE1	11.35	19	49	115/230	1.9	3, 30
	1200	56C	**KL3401**	876	GE1	11.35	24	47	115/230	2.3	3, 30
1/4	1800	56C	**KL3403**	644	GE1	11.35	20	55	115/230	2.5	3, 30
1/3	3600	56C	**KL3405**	594	GE1	11.35	24	55	115/208-230	3	3
	1800	56C	**VL3501**	659	GE1	11.35	22	60	115/230	3	3, 30
1/2	3600	56C	**VL3503**	667	GE1	11.35	23	66	115/230	3.5	3, 30
	1800	56C	**VL3504**	771	GE1	11.35	27	68	110/220	3.7	3, 30
	1200	56C	**VL3505**	1,426	GE1	13.25	43	62.5	115/230	3.9	3, 30
3/4	3600	56C	**VL3506**	741	GE1	11.97	29	66	115/230	4.8	3, 30
		56C	**VL3506A**	818	GE1	11.97	28	66	115/230	4.8	3
	1800	56C	**VL3507**	883	GE1	12.47	33	72	115/230	4.2	1, 30, 65
	1200	56C	**VL3508**	1,640	GE1	13.25	44	73.5	115/230	3.9	2, 30, 65
1	3600	56C	**VL3509**	853	GE1	12.25	36	68	115/230	5.9	3, 30
		56C	**VL3509A**	932	GE1	13.25	41	66	110/220	6	3
	1800	56C	**VL3510**	1,011	GE1	13.25	40	68	115/230	6.4	3, 30
		143TC	**VL3510T**	1,011	GE1	13.29	44	68	115/230	6.4	3, 30
1 1/2	3600	56C	**VL3513**	1,108	GE1	13.25	40	70	115/230	8	3, 30
		143TC	**VL3513T**	1,177	GE1	13.31	41	70	115/230	8	3, 30
	1800	56C	**VL3514**	1,146	GE1	14.12	48	80	115/230	6.2	30, 65
		145TC	**VL3514T**	1,159	GE1	14.17	50	80	115/230	6.2	30, 65
2	3600	56C	**VL3515**	1,419	GE1	14.12	50	74	115/208-230	11.5	1, 3
		145TC	**VL3515T**	1,446	GE1	14.19	51	74	115/230	11.5	1, 3, 30
	1800	182TC	**VL3605T**	2,048	GE1	16.55	66	75.5	115/230	11.5	3, 30
3	3600	182TC	**VL3606T**	2,286	GE1	16.55	73	76	115/230	14.5	1, 3, 30
	1800	184TC	**VL3609T**	2,419	GE1	16.55	79	78	115/230	14	2, 20, 30, 65

(a) See notes on inside back flap. **Red** catalog number indicates **NEW** product.
*IP54 when Drain Fitting Kit #HA5027A03 is installed in the weep holes (48 thru 256T frame motors only)

General purpose, single phase, ODP, foot mounted

1/6 thru 10 Hp

IP22

Features:

- Low noise vibration dampening base
- Dynamically balanced rotor to increase bearing life
- Superior switch design provides optimized torque profiles
- Robust heavy gauge steel design
- Optimized airflow design providing higher horsepower in a smaller package

Applications:

- Air handling
- Material handling
- Machine tools
- Conveyors
- Pumps
- Fans

Hp	RPM	NEMA Frame	Catalog Number	List Price	Disc. Sym.	"C" Dim.	Aprx. Wt. (lb)	Full Load Efficiency	Voltage	Full Load Amps	Notes (a)
1/6	1800	48	**L1200**	494	G01	9.13	18	49	115/230	1.9	30
	1200	48	**L1201**	757	G01	9.38	23	47	115/230	2.3	30
1/4	1800	48	**EL11203**	678	G01	9.76	19	68.5	115/230	1.3	15
		48	**EL11203M**	723	G01	9.76	19	68.5	115/230	1.3	15
	1200	48	**EL11204**	809	G01	9.76	25	64	115/230	1.5	15
		56	**EL11300**	841	G01	10.13	25	64	115/230	1.5	15
1/3	3600	48	**EL11205**	716	G01	9.76	24	70.5	115/230	1.5	15
	1800	48	**EL11206**	729	G01	9.76	27	72.4	115/230	1.7	15
		48	**EL11206M**	774	G01	9.76	27	72.4	115/230	1.7	15
		56	**EL11301**	729	G01	10.13	27	72.4	115/230	1.7	15
		56	**EL11301M**	774	G01	10.13	27	72.4	115/230	1.7	15
	1200	48	**EL11207**	863	G01	9.76	27	68	115/230	1.9	15
		56	**EL11302**	863	G01	10.13	30	68	115/230	1.9	15
1/2	3600	48	**EL11208**	762	G01	9.76	24	72.4	115/230	2.5	15
		56	**EL11303**	762	G01	10.13	24	72.4	115/230	2.5	15
	1800	48	**EL11209**	818	G01	10.63	32	76.2	115/230	2.4	15
		48	**EL11209M**	863	G01	10.63	32	76.2	115/230	2.2	15
		56H	**EL11304**	818	G01	11.00	32	76.2	115/230	2.4	15
		56	**EL11304A**	863	G01	11.00	32	76.2	115/230	2.3	15
	1200	56H	**EL11305**	1,296	G01	11.75	46	76.2	115/230	2.2	15
3/4	3600	56H	**EL11306**	797	G01	11.00	39	76.2	115/230	3.3	15
		56	**EL11306A**	841	G01	11.00	39	76.2	115/230	3.3	15
	1800	56H	**EL11307**	975	G01	12.07	39	81.8	115/230	3.5	15
		56	**EL11307A**	1,019	G01	12.07	39	81.8	115/230	3.4	15
		56	**EL11307M**	1,019	G01	12.07	39	81.8	115/230	3.4	15
	1200	56H	**EL11308**	1,459	G01	12.62	47	80.2	115/230	3.1	15
1	3600	56H	**EL11309**	935	G01	12.07	43	82	115/230	3.9	15
		56	**EL11309A**	978	G01	12.07	43	82	115/230	3.9	15
	1800	56H	**EL11318**	1,123	G01	11.75	44	82.6	115/230	4.2	15
		56H	**EL11318M**	1,166	G01	11.75	44	82.6	115/230	4.5	15
		143T	**L1318T**	995	G01	12.12	43	67	115/230	6.2	30
		143T	**L1318TM**	1,037	G01	12.12	42	67	115/230	6.2	2
1 1/2	3600	56H	**EL11313**	1,062	G01	12.62	52	82	115/230	5.9	15
		56H	**EL11313A**	1,107	G01	12.62	52	82	115/230	5.9	15
		143T	**L1313T**	942	G01	11.12	36	70	115/230	8.9	30
	1800	56H	**EL11319**	1,337	G01	14.00	59	83.8	115/230	6.2	15
		56H	**EL11319M**	1,446	G01	14.00	59	83.8	115/230	6.2	15
		145T	**EL1319T**	1,485	G01	13.00	50	85.5	115/208-230	6.3	1, 65
		145T	**L1319T**	1,060	G01	12.12	42	68	115/230	9	30
		145T	**L1321T**	1,273	G01	13.00	49	70	115/230	10.5	30
		145T	**L1321TM**	1,382	G01	13.00	48	70	115/208-230	10.5	

(a) See notes on inside back flap.
Red catalog number indicates **NEW** product.

General purpose, single phase, ODP, foot mounted

Hp	RPM	NEMA Frame	Catalog Number	List Price	Disc. Sym.	"C" Dim.	Aprx. Wt. (lb)	Full Load Efficiency	Voltage	Full Load Amps	Notes (a)
2	3600	56H	**EL11317**	1,174	G01	14.00	66	82.9	115/230	7.8	15
		56H	**EL11317A**	1,219	G01	14.00	66	82.9	115/230	7.8	15
		145T	**L1320T**	1,342	G01	12.12	46	71	115/230	11.5	30, 65
	1800	145T	**L1322T**	1,298	G01	13.00	49	75.5	115/208-230	10.2	65
		145T	**L1322TM**	1,413	G01	13.00	45	78.5	115/230	9.2	65
		182T	**EL1405T**	1,797	G01	15.87	65	82.5	115/230	8.8	1, 65
		182T	**L1405T**	1,332	G01	15.00	66	71	115/230	12	30
3	3600	182T	**EL1406T**	1,892	G01	15.00	70	81	115/230	12.3	65
		182T	**L1406T**	1,526	G01	15.00	65	78	115/230	14	30
	1800	184T	**EL1408T**	1,880	G01	16.50	81	85.5	208-230	11.2	1, 65
		184T	**L1408T**	1,442	G01	15.00	76	78	115/230	16	30, 65
		184T	**L1408TM**	1,696	G01	15.00	74	78	115/230	16	
5	3600	184T	**EL1409T**	2,246	G01	15.00	79	81.5	230	20	65
		184T	**L1409T**	1,816	G01	15.00	79	75	230	23	30
	1800	184T	**EL1410T**	2,147	G01	18.00	97	86.5	230	19.1	1, 65
		184T	**L1410T**	1,517	G01	16.50	81	82.5	230	23	1, 30, 65
		184T	**L1410TM**	2,063	G01	16.50	85	82.5	230	23	1, 30
		184T	**L1430T**	1,564	G01	16.55	78	84	230	20.6	1, 30, 65
		184T	**L1430TM**	2,063	G01	16.55	82	80	230	24	1, 30, 65
		213T	**L1508T**	2,251	G01	16.32	108	77	230	27	
7 1/2	3600	213T	**L1509T**	2,806	G01	18.37	94	82.5	230	30	1, 30, 65
	1800	215T	**L1510T**	2,442	G01	17.45	134	85.5	230	31	30, 65
10	3600	215T	**L1511T**	3,539	G01	17.45	131	83	230	46	1, 30
	1800	215T	**L1512T**	3,563	G01	17.45	132	85.5	230	39	65

(a) See notes on inside back flap.

General purpose, single phase, ODP, C-Face

1/6 thru 5 Hp

IP22

Features:

- Locked DE bearing to allow mounting in any configuration**
- Low noise vibration dampening base
- Dynamically balanced rotor to increase bearing life
- Superior switch design provides optimized torque profiles
- Robust heavy gauge steel design
- Optimized airflow design providing higher horsepower in a smaller package

Applications:

- Gear reducers
- Material handling
- Machine tools
- Conveyors
- Pumps
- Fans

Hp	RPM	NEMA Frame	Catalog Number	List Price	Disc. Sym.	"C" Dim.	Aprx. Wt. (lb)	Full Load Efficiency	Voltage	Full Load Amps	Notes (a)
C-Face, foot mounted											
1/3	1800	56C	**CEL11301**	779	G01	10.74	27	72.4	115/230	1.7	15
1/2	3600	56C	**CEL11303**	812	G01	10.74	24	72.4	115/230	2.5	15
	1800	56C	**CEL11304**	868	G01	11.62	32	76.2	115/230	2.4	15
3/4	1800	56C	**CEL11307**	1,024	G01	12.06	39	81.8	115/230	3.5	15
1	1800	56C	**CEL11310**	1,172	G01	12.06	44	82.6	115/230	4.2	15
3	1800	184TC	**CL1408TM**	1,792	G01	14.99	80	78	115/230	16	
5	1800	184TC	**CL1410TM**	2,160	G01	16.49	88	82.5	230	23	1, 30
C-Face, footless, drip cover											
1/6	1800	56C	**KL1200**	530	G01	11.22	19	49	115/230	1.9	30
1/4	1800	56C	**KEL11203**	728	G01	11.85	22	68.5	115/230	1.3	15
1/3	3600	56C	**KEL11205**	766	G01	11.85	24	70.5	115/230	1.5	15
		56C	**KEL11205A**	810	G01	12.66	24	70.5	115/230	1.5	15
	1800	56C	**VEL11301**	779	G01	11.85	27	72.4	115/230	1.7	15
		56C	**VEL11301A**	823	G01	11.85	27	72.4	115/230	1.7	15
1/2	3600	56C	**VEL11303**	812	G01	11.85	24	72.4	115/230	2.5	15
		56C	**VEL11303A**	823	G01	11.85	24	72.4	115/230	2.5	15
	1800	56C	**VEL11304**	868	G01	12.73	32	76.2	115/230	2.4	15
		56C	**VEL11304A**	912	G01	12.51	32	76.2	115/230	2.3	15
	1200	56C	**VEL11305**	1,345	G01	13.24	42	76.2	115/230	2.2	15
3/4	3600	56C	**VEL11306**	846	G01	14.04	39	76.2	115/230	3.3	15
		56C	**VEL11306A**	891	G01	14.04	39	76.2	115/230	3.3	15
	1800	56C	**VEL11307**	1,024	G01	13.22	44	81.8	115/230	3.5	15
		56C	**VEL11307A**	1,069	G01	12.75	39	81.8	115/230	3.4	15
	1200	56C	**VEL11308**	1,508	G01	14.12	47	80.2	115/230	3.1	15
1	3600	56C	**VEL11309**	985	G01	12.06	43	82	115/230	3.9	15
		56C	**VEL11309A**	1,029	G01	12.06	43	82	115/230	3.9	15
	1800	56C	**VEL11318**	1,172	G01	13.24	44	82.6	115/230	4.2	15
		56C	**VEL11318A**	1,217	G01	12.75	44	82.6	115/230	4.2	15
1 1/2	3600	56C	**VEL11313**	1,113	G01	14.10	52	82	115/230	5.9	15, 30
		56C	**VEL11313A**	1,158	G01	14.10	52	82	115/230	5.9	15
	1800	56C	**VEL11319**	1,386	G01	15.50	59	83.8	115/230	6.2	15
		145TC	**VL1321T**	1,311	G01	14.17	48	70	115/230	10.5	30
2	3600	56C	**VEL11317**	1,223	G01	15.47	66	82.9	115/230	7.8	15
		56C	**VEL11317A**	1,268	G01	15.47	66	82.9	115/230	7.8	15
	1800	145TC	**VL1322T**	1,335	G01	14.18	49	75.5	115/230	10.2	65
3	3600	182TC	**VL1406T**	1,622	G01	15.18	61	75.5	115/230	13.6	30, 65
	1800	184TC	**VL1408T**	1,642	G01	16.55	78	78	115/230	16	30, 65

(a) See notes on inside back flap.
Red catalog number indicates **NEW** product.
**ODP motors retain IP rating when mounted in horizontal position only.

General purpose, three phase, totally enclosed, foot mounted

1/8 thru 400 Hp

IP44*

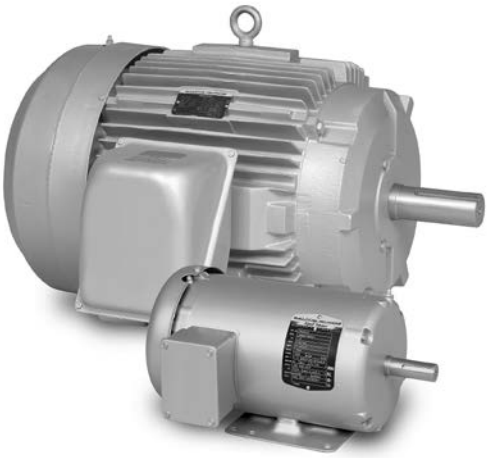

Features:

- 60 Hz designs with 50 Hz information on 2,4,6 pole 1-125 Hp ratings
- 2,4,6,8 pole
- Suitable for inverter use per NEMA MG1 Part 31.4.4.2 unless note 38 is indicated
- Simple F1 to F2 conversion on cast iron frames
- Designed for longevity with a 3 year warranty on premium efficient Super-E® motors

Applications:

- Fans
- Pumps
- Blowers
- Conveyors
- Compressors
- Industrial machines
- Other general purpose applications

Hp	RPM	NEMA Frame	Enclosure	Catalog Number	List Price	Disc. Sym.	"C" Dim.	Aprx. Wt. (lb)	Full Load Efficiency	Voltage	Full Load Amps	Notes (a)
230/460 volts												
1/8	1800	42	TEFC	**M3353**	619	GE3	9.56	16	44	230/460	0.5	30, 38
1/6	1800	42	TEFC	**M3355**	701	GE3	9.56	17	62	230/460	0.6	13, 30, 38
	1200	48	TEFC	**M3452**	723	GE3	10.73	17	57.5	230/460	0.6	13, 30, 38
1/4	1800	48	TEFC	**M3454**	512	GE3	10.73	19	64	230/460	0.7	13, 30, 38
		48	TENV	**NM3454**	537	GE3	9.62	20	68	230/460	0.5	1, 13, 30, 38
		56	TENV	**NM3454 /35**	863	GE3	11.06	28	80	230/460	0.4	1, 30, 48
	1200	48	TEFC	**M3455**	805	GE3	10.73	18	68	230/460	0.7	13, 30, 38
		48	TENV	**NM3455**	741	GE3	9.62	19	68	230/460	0.7	30, 38
		56	TEFC	**M3531**	797	GE3	11.35	23	68	230/460	0.7	13, 30, 38
	900	56	TEFC	**M3532**	1,161	GE3	12.23	28	57.5	208-230/460	0.8	13
1/3	3600	48	TENV	**M3457**	520	GE3	9.62	20	72	230/460	0.7	13, 30, 38
	1800	48	TEFC	**M3458**	624	GE3	10.73	21	68	230/460	0.8	13, 30, 38
		56	TEFC	**M3534**	560	GE3	11.35	21	68	230/460	0.8	13, 30, 38
		56	TENV	**NM3534**	601	GE3	10.25	23	70	230/460	0.7	1, 13, 30, 38
	1200	56	TEFC	**M3535**	896	GE3	11.35	22	70	230/460	0.9	13, 30, 38
	900	56	TEFC	**M3536**	1,265	GE3	12.23	29	59.5	208-230/460	1	13
1/2	3600	48	TEFC	**M3460**	603	GE3	10.73	19	68	230/460	1	12, 30, 38
		56	TEFC	**M3537**	603	GE3	11.35	19	68	230/460	1	12, 30, 38
	1800	48	TEFC	**M3461**	731	GE3	10.73	22	74	230/460	1	12, 30, 38
		56	TEFC	**EM3538**	965	GE3	12.23	29	82.5	230/460	0.8	1, 30
		56	TEFC	**M3538**	570	GE3	11.35	23	74	230/460	1	12, 30, 38
		56	TEFC	**M3538 /35**	825	GE3	12.23	25	72	208-230/460	1.1	1, 48
		56	TENV	**NM3538**	697	GE3	10.88	25	75.5	230/460	0.9	1, 12, 30, 38
		56	TENV	**NM3538 /35**	841	GE3	11.06	27	80	230/460	0.8	1, 30, 48
	1200	56	TEFC	**M3539**	965	GE3	11.35	24	72	230/460	1.2	30, 38
		56	TENV	**NM3539**	1,060	GE3	12.06	40	78.5	230/460	1	30
	900	56H	TEFC	**M3560**	1,419	GE3	12.91	38	70	208-230/460	1.3	36
3/4	3600	48	TEFC	**M3463**	664	GE3	10.73	21	74	230/460	1.3	12, 30, 38
		56	TEFC	**M3541**	664	GE3	11.35	21	74	230/460	1.3	12, 30, 38
	1800	48	TEFC	**M3464**	790	GE3	10.73	25	75.5	208-230/460	1.5	12, 38
		56	TEFC	**M3542**	685	GE3	11.35	25	75.5	208-230/460	1.5	12, 38
		56	TENV	**NM3542**	749	GE3	11.06	29	78.5	230/460	1.4	1, 12, 30
	1200	56	TEFC	**M3543**	985	GE3	12.84	32	77	208-230/460	1.5	38
		143T	TEFC	**M3543T**	985	GE3	13.41	33	77	208-230/460	1.5	38
	900	145T	TEFC	**M3562T**	1,805	GE3	14.19	51	72	208-230/460	1.6	1, 30

(a) See notes on inside back flap.
*IP54 when Drain Fitting Kit #HA5027A03 is installed in the weep holes (48 thru 256T frame motors only)
For larger Hp motors, please refer to the "Large Motors and Generators" section of the catalog.

General purpose, three phase, totally enclosed, foot mounted

Hp	RPM	NEMA Frame	Enclosure	Catalog Number	List Price	Disc. Sym.	"C" Dim.	Aprx. Wt. (lb)	Full Load Efficiency	Voltage	Full Load Amps	Notes (a)
230/460 volts (continued)												
1	3600	56	TEFC	**EM3545**	1,056	GE3	12.25	37	77	230/460	1.4	1, 12, 30
	1800	56	TEFC	**EM3546**	1,079	GE3	12.23	35	85.5	230/460	1.5	1, 30
		56	TENV	**ENM3546**	1,215	GE3	12.06	39	85.5	230/460	1.5	1, 30
		143T	TEFC	**EM3546T**	1,079	GE3	12.31	35	85.5	230/460	1.5	1, 30
		143T	TEFC	**EM3581T**	1,503	GE3	12.53	51	85.5	230/460	1.5	1, 30
		143T	TENV	**ENM3546T**	1,215	GE3	12.12	39	85.5	230/460	1.5	1, 30
	1200	56	TEFC	**EM3556**	1,393	GE3	13.23	42	82.5	230/460	1.8	1, 30
		145T	TEFC	**EM3556T**	1,393	GE3	13.31	42	82.5	230/460	1.8	1, 30
		145T	TEFC	**EM3582T**	1,685	GE3	12.53	56	82.5	230/460	1.7	1, 30
	900	182T	TEFC	**EM3617T**	2,294	GE3	16.54	65	75.5	230/460	2.3	1, 30
1 1/2	3600	56	TEFC	**EM3550**	1,195	GE3	12.25	35	84	230/460	1.9	1, 30
		143T	TEFC	**EM3550T**	1,195	GE3	12.31	36	84	230/460	1.9	1, 30
		143T	TEFC	**EM3583T**	1,591	GE3	12.53	52	84	230/460	1.9	1, 30
	1800	56	TEFC	**EM3554**	1,199	GE3	13.23	40	86.5	230/460	2.2	1, 30
		145T	TEFC	**EM3554T**	1,199	GE3	13.31	41	86.5	230/460	2.2	1, 30
		145T	TEFC	**EM3584T**	1,559	GE3	12.53	57	86.5	230/460	2.3	1, 30
		145T	TENV	**ENM3554T**	1,350	GE3	13.00	50	86.5	230/460	2.1	1, 30
	1200	182T	TEFC	**EM3607T**	1,629	GE3	16.55	73	87.5	230/460	2.4	1, 30
		182T	TEFC	**EM3667T**	2,004	GE3	15.24	93	87.5	230/460	2.5	1, 30
	900	184T	TEFC	**EM3618T**	2,717	GE3	18.04	82	78.5	230/460	3	1, 30
2	3600	56	TEFC	**EM3555**	1,309	GE3	13.25	42	85.5	230/460	2.5	1, 30
		145T	TEFC	**EM3555T**	1,309	GE3	13.29	43	85.5	230/460	2.5	1, 30
		145T	TEFC	**EM3586T**	1,670	GE3	12.55	59	85.5	230/460	2.5	1, 30
	1800	56	TEFC	**EM3558**	1,268	GE3	13.23	46	86.5	230/460	2.9	1, 30
		145T	TEFC	**EM3558T**	1,268	GE3	13.31	45	86.5	230/460	2.9	1, 30
		145T	TEFC	**EM3587T**	1,635	GE3	12.53	58	86.5	230/460	2.9	1, 30
	1200	184T	TEFC	**EM3614T**	1,708	GE3	18.05	93	88.5	230/460	3.5	1, 30
		184T	TEFC	**EM3664T**	2,037	GE3	15.24	109	88.5	230/460	3.2	1, 30
	900	213T	TEFC	**EM3702T**	3,440	GE3	17.89	110	84	230/460	3.5	1, 30
3	3600	56H	TEFC	**EM3559**	1,434	GE3	13.79	50	86.5	230/460	3.6	1, 30
		145T	TEFC	**EM3559T**	1,434	GE3	14.17	49	86.5	230/460	3.6	1, 30
		182T	TEFC	**EM3610T**	1,452	GE3	15.14	50	86.5	230/460	3.6	1, 30
		182T	TEFC	**EM3660T**	1,805	GE3	15.24	84	86.5	230/460	3.8	1, 30
	1800	182T	TEFC	**EM3611T**	1,301	GE3	16.55	73	89.5	230/460	4.2	1, 30
		182T	TEFC	**EM3661T**	1,856	GE3	15.24	97	89.5	230/460	4.1	1, 30
	1200	213T	TEFC	**EM3704T**	2,221	GE3	19.02	134	89.5	230/460	4.6	1, 30
		213T	TEFC	**EM3764T**	2,538	GE3	18.45	173	89.5	230/460	4.5	1, 30
	900	215T	TEFC	**EM3705T**	3,759	GE3	19.01	111	86.5	230/460	5.2	1, 30
5	3600	184T	TEFC	**EM3613T**	1,610	GE3	16.55	75	88.5	230/460	5.9	1, 30
		184T	TEFC	**EM3663T**	2,221	GE3	15.24	99	88.5	230/460	5.8	1, 30
	1800	184T	TEFC	**EM3615T**	1,344	GE3	18.05	93	89.5	230/460	6.7	1, 30
		184T	TEFC	**EM3665T**	1,899	GE3	15.24	107	89.5	230/460	6.6	1, 30
	1200	215T	TEFC	**EM3708T**	2,510	GE3	19.77	154	89.5	230/460	7.3	1, 30
		215T	TEFC	**EM3768T**	2,944	GE3	18.45	195	89.5	230/460	7.4	1, 30
	900	254T	TEFC	**EM2280T**	5,982	GE3	23.28	256	86.5	230/460	7.9	1, 30
7 1/2	3600	184T	TEFC	**EM3616T**	2,124	GE3	18.05	98	89.5	230/460	8.4	1, 30
		213T	TEFC	**EM3709T**	2,412	GE3	17.89	116	89.5	230/460	9	1, 30
		213T	TEFC	**EM3769T**	2,570	GE3	18.45	165	89.5	230/460	9	1, 30
	1800	213T	TEFC	**EM3710T**	1,938	GE3	19.02	128	91.7	230/460	9.4	1, 30
		213T	TEFC	**EM3770T**	2,477	GE3	18.45	170	91.7	230/460	9.5	1, 30
	1200	254T	TEFC	**EM2276T**	4,197	GE3	23.28	278	91	230/460	11	1, 30
	900	256T	TEFC	**EM2401T**	6,597	GE3	23.28	320	86.5	230/460	12.2	1, 30
10	3600	215T	TEFC	**EM3711T**	2,445	GE3	17.89	120	90.2	230/460	11.8	1, 30
		215T	TEFC	**EM3771T**	3,013	GE3	18.45	182	90.2	230/460	11.8	1, 30
	1800	215T	TEFC	**EM3714T**	2,188	GE3	20.52	162	91.7	230/460	12	1, 30
		215T	TEFC	**EM3774T**	2,778	GE3	18.45	191	91.7	230/460	12.2	1, 30
	1200	256T	TEFC	**EM2332T**	4,790	GE3	23.28	290	91	230/460	14.1	1, 30
	900	284T	TEFC	**EM2402T**	7,659	GE3	27.76	391	89.5	230/460	14.6	1, 30

(a) See notes on inside back flap. Cast iron frame

*IP54 when Drain Fitting Kit #HA5027A03 is installed in the weep holes (48 thru 256T frame motors only)

For larger Hp motors, please refer to the "Large Motors and Generators" section of the catalog.

General purpose, three phase, totally enclosed, foot mounted

Hp	RPM	NEMA Frame	Enclosure	Catalog Number	List Price	Disc. Sym.	"C" Dim.	Aprx. Wt. (lb)	Full Load Efficiency	Voltage	Full Load Amps	Notes (a)
230/460 volts (continued)												
15	3600	215T	TEFC	**EM3713T**	3,450	GE3	20.52	172	91	230/460	17	1, 30
		254T	TEFC	**EM2394T**	4,150	GE3	23.28	241	91	230/460	17.5	1, 30
	1800	254T	TEFC	**EM2333T**	3,371	GE3	23.28	270	92.4	230/460	18.1	1, 30
	1200	284T	TEFC	**EM4100T**	6,389	GE3	27.76	391	91.7	230/460	21	1, 30
	900	286T	TEFC	**EM2395T**	10,651	GE3	27.76	455	89.5	230/460	23	1, 30
20	3600	256T	TEFC	**EM4106T**	4,555	GE3	23.28	262	91	230/460	23	1, 30
	1800	256T	TEFC	**EM2334T-12**	5,174	GE3	23.28	291	93	230/460	23	1, 30
		256T	TEFC	**EM2334T**	4,087	GE3	23.28	289	93	230/460	24	1, 30
	1200	286T	TEFC	**EM4102T**	8,507	GE3	27.76	399	91.7	230/460	27	1, 30
	900	324T	TEFC	**EM4112T**	12,111	GE3	30.28	534	90.2	230/460	35	1, 30
25	3600	256T	TEFC	**EM4118T**	5,312	GE3	23.28	305	91.7	230/460	29	1, 30
		284TS	TEFC	**EM4107T**	5,943	GE3	24.70	327	91.7	230/460	29	1, 30
	1800	284T	TEFC	**EM4103T**	5,345	GE3	27.76	388	93.6	230/460	30	1, 30
		284T	TEFC	**EM4103T-12**	6,926	GE3	27.56	402	93.6	230/460	30	1, 25, 30
	1200	324T	TEFC	**EM4111T**	9,625	GE3	30.39	445	93	230/460	32	1, 30
	900	326T	TEFC	**EM4116T**	14,958	GE3	30.28	578	90.2	230/460	37	1, 30
30	3600	286TS	TEFC	**EM4108T**	7,061	GE3	24.70	347	91.7	230/460	34	1, 30
	1800	286T	TEFC	**EM4104T**	6,340	GE3	27.76	430	93.6	230/460	38	1, 30
		286T	TEFC	**EM4104T-12**	8,047	GE3	27.76	425	93.6	230/460	36	1, 25
	1200	326T	TEFC	**EM4117T**	11,120	GE3	30.28	604	93	230/460	39	1, 30
	900	364T	TEFC	**EM4338T**	16,635	GE3	33.44	813	92.4	230/460	39.3	1, 30
40	3600	324TS	TEFC	**EM4109T**	9,677	GE3	28.78	551	92.4	230/460	46	1, 30
	1800	324T	TEFC	**EM4110T**	8,291	GE3	30.28	570	94.1	230/460	48	1, 30
		324T	TEFC	**EM4110T-12**	10,743	GE3	30.28	601	94.1	230/460	48	1, 25, 30
	1200	364T	TEFC	**EM4308T**	13,855	GE3	33.48	899	94.1	230/460	49.4	1, 30
	900	364T	TEFC	**EM4348T**	20,633	GE3	33.48	875	93	230/460	52	1, 30
50	3600	326TS	TEFC	**EM4114T**	10,586	GE3	28.78	575	93	230/460	56	1, 30
	1800	326T	TEFC	**EM4115T**	9,058	GE3	30.28	650	94.5	230/460	58	1, 30
		326T	TEFC	**EM4115T-12**	11,609	GE3	30.28	652	94.5	230/460	58	1, 25
		326TS	TEFC	**EM4115TS**	10,208	GE3	28.78	639	94.5	230/460	58	1, 30
	1200	365T	TEFC	**EM4312T**	16,742	GE3	33.48	902	94.1	230/460	61.7	1, 30
	900	405T	TEFC	**EM4458T**	25,336	GE3	38.20	1216	93	230/460	63	1, 30
60	3600	364TS	TEFC	**EM4310T**	14,873	GE3	31.36	810	95	230/460	65.1	1
	1800	364T	TEFC	**EM4314T**	13,071	GE3	33.48	912	95	230/460	67.8	1, 30
		364T	TEFC	**EM4314T-12**	16,890	GE3	33.48	850	95	230/460	68	1, 25
		364TS	TEFC	**EM4314TS**	14,687	GE3	31.36	907	95	230/460	68	1, 30
	1200	404T	TEFC	**EM4403T**	20,322	GE3	38.04	1187	95	230/460	69	1
	900	405T	TEFC	**EM4468T**	29,260	GE3	38.20	1216	93	230/460	76	1
75	3600	365TS	TEFC	**EM4313T**	17,302	GE3	31.36	980	94.5	230/460	80.7	1
	1800	365T	TEFC	**EM4316T**	15,284	GE3	33.48	955	95.4	230/460	84.9	1, 30
		365T	TEFC	**EM4316T-12**	19,750	GE3	33.48	955	95.4	230/460	85.9	1, 25
		365TS	TEFC	**EM4316TS**	17,173	GE3	31.36	946	95.4	230/460	85.9	1
	1200	405T	TEFC	**EM4404T**	23,664	GE3	38.04	1229	94.5	230/460	86.8	1
100	3600	405TS	TEFC	**EM4402T-4**	22,121	GE3	35.04	1187	95	460	110	1, 25
	1800	405T	TEFC	**EM4400T**	18,927	GE3	38.04	1203	95.4	230/460	112	1
		405T	TEFC	**EM4400T-12**	24,527	GE3	38.04	1211	95.4	230/460	112	1, 25
		405TS	TEFC	**EM4400TS**	21,328	GE3	35.04	1206	95.4	230/460	112	1
	1200	444T	TEFC	**EM4409T-4**	28,561	GE3	44.75	1828	95	460	119	1
125	3600	444TS	TEFC	**EM4412T-4**	27,343	GE3	40.83	1901	95	460	137	1
	1800	444T	TEFC	**EM4410T-4**	23,541	GE3	44.75	1969	95.4	460	144	1, 25
		444TS	TEFC	**EM4410TS-4**	26,401	GE3	41.08	2001	95.4	460	144	1
		444T	TEFC	**EM4410TR-4**	28,423	GE3	44.75	1988	95.4	460	144	1, 5
	1200	445T	TEFC	**EM4411T-4**	33,600	GE3	44.75	2073	95	460	146	1, 25
150	3600	445TS	TEFC	**EM4413T-4**	32,173	GE3	41.08	1995	95	460	164	1
	1800	445T	TEFC	**EM4406T-4**	26,951	GE3	44.75	1826	95.8	460	169	1, 25
		445TS	TEFC	**EM4406TS-4**	30,369	GE3	41.08	2071	95.8	460	169	1
		445T	TEFC	**EM4406TR-4**	32,392	GE3	44.75	1826	95.8	460	169	1, 5, 25
	1200	447T	TEFC	**EM44156T-4**	38,486	GE3	48.24	2571	95.8	460	170	1, 25

(a) See notes on inside back flap.
Cast iron frame
*IP54 when Drain Fitting Kit #HA5027A03 is installed in the weep holes (48 thru 256T frame motors only)
For larger Hp motors, please refer to the "Large Motors and Generators" section of the catalog.

General purpose, three phase, totally enclosed, foot mounted

Hp	RPM	NEMA Frame	Enclosure	Catalog Number	List Price	Disc. Sym.	"C" Dim.	Aprx. Wt. (lb)	Full Load Efficiency	Voltage	Full Load Amps	Notes (a)
230/460 volts (continued)												
200	3600	447TS	TEFC	**EM4416T-4**	38,558	GE3	44.48	2355	95.4	460	216	1
	1800	447T	TEFC	**EM4407T-4**	38,069	GE3	48.24	2497	96.2	460	223	1, 25
		447TS	TEFC	**EM4407TS-4**	38,069	GE3	44.48	2487	96.2	460	223	1
		447T	TEFC	**EM4407TR-4**	40,091	GE3	48.24	2531	96.2	460	223	1, 5
	1200	449T	TEFC	**EM44206T-4**	47,483	GE3	53.24	3017	95.8	460	225	1
250	3600	449TS	TEFC	**EM44252T-4**	60,041	GE3	49.48	2595	95.8	460	268	1
	1800	447T	TEFC	**EM4408T-4**	49,922	GE3	53.22	2888	96.2	460	276	1, 25
		447T	TEFC	**EM4408TR-4**	51,944	GE3	53.22	2888	96.2	460	276	1, 5
		447TS	TEFC	**EM4408TS-4**	49,922	GE3	59.47	2888	96.2	460	276	1, 25
	1200	449T	TEFC	**EM44256T-4**	69,422	GE3	53.22	3125	95.8	460	285	1, 25
300	3600	449TS	TEFC	**EM44302T-4**	87,107	GE3	49.47	2595	95.8	460	324	1
	1800	449T	TEFC	**EM44304T-4**	68,590	GE3	53.24	2888	96.2	460	327	1
		449TS	TEFC	**EM44304TS-4**	68,590	GE3	49.47	2888	96.2	460	327	1
	1200	449T	TEFC	**EM44306T-4**	82,360	GE3	60.21	3683	95.8	460	340	1
350	3600	449TS	TEFC	**EM44352T-4**	104,553	GE3	49.47	2855	96.2	460	375	1
	1800	449T	TEFC	**EM44354T-4**	82,564	GE3	53.24	3027	96.2	460	392	1
		449TS	TEFC	**EM44354TS-4**	82,564	GE3	49.47	3027	96.2	460	392	1
400	3600	449TS	TEFC	**EM44402T-4**	122,319	GE3	49.47	3149	95.8	460	424	
	1800	449T	TEFC	**EM44404T-4**	102,800	GE3	60.21	3680	96.2	460	436	
200 volts												
1	1800	143T	TEFC	**EM3546T-8**	1,215	GE3	12.31	35	85.5	200	3.5	1, 68
1 1/2	1800	145T	TEFC	**EM3554T-8**	1,350	GE3	13.31	43	86.5	200	5	1, 68
2	1800	145T	TEFC	**EM3558T-8**	1,428	GE3	13.31	46	86.5	200	6.7	1, 68
3	3600	182T	TEFC	**EM3660T-8**	1,805	GE3	15.24	82	86.5	200	8.8	1, 68
	1800	182T	TEFC	**EM3661T-8**	1,856	GE3	15.24	96	89.5	200	9.5	1, 68
		182T	TEFC	**EM3611T-8**	1,466	GE3	16.55	72	89.5	200	9.7	1, 68
5	3600	184T	TEFC	**EM3663T-8**	2,221	GE3	15.24	99	88.5	200	13.3	1, 68
	1800	184T	TEFC	**EM3665T-8**	1,899	GE3	15.24	108	89.5	200	15.1	1, 68
		184T	TEFC	**EM3615T-8**	1,513	GE3	18.04	93	89.5	200	15.2	1, 68
7 1/2	3600	213T	TEFC	**EM3769T-8**	2,570	GE3	18.45	155	89.5	200	21	1, 68
	1800	213T	TEFC	**EM3770T-8**	2,477	GE3	18.45	170	91.7	200	21.4	1, 68
		213T	TEFC	**EM3710T-8**	2,183	GE3	19.01	127	91.7	200	21.6	1, 68
10	3600	215T	TEFC	**EM3771T-8**	3,013	GE3	18.45	182	90.2	200	26.8	1, 68
	1800	215T	TEFC	**EM3774T-8**	2,778	GE3	18.45	189	91.7	200	28	1, 68
		215T	TEFC	**EM3714T-8**	2,465	GE3	19.78	165	91	200	28.9	1, 68
15	3600	254T	TEFC	**EM2394T-8**	4,150	GE3	23.28	240	91	200	40	1, 68
	1800	254T	TEFC	**EM2333T-8**	3,797	GE3	23.28	255	92.4	200	42.4	1, 30, 68
20	3600	256T	TEFC	**EM4106T-8**	4,555	GE3	23.28	242	91	200	52	1, 24, 69
	1800	256T	TEFC	**EM2334T-8**	4,604	GE3	23.28	292	93	200	55.2	1, 24, 30, 69
25	3600	284TS	TEFC	**EM4107T-8**	5,943	GE3	24.70	305	91.7	200	65	1, 24, 69
	1800	284T	TEFC	**EM4103T-8**	6,022	GE3	27.76	382	93.6	200	68.4	1, 24, 69
30	3600	286TS	TEFC	**EM4108T-8**	7,061	GE3	24.70	324	91.7	200	76	1, 24, 69
	1800	286T	TEFC	**EM4104T-8**	7,143	GE3	27.76	413	93.6	200	84	1, 24, 69
40	1800	324T	TEFC	**EM4110T-8**	9,342	GE3	30.28	576	94.1	200	111	1, 24, 69
50	1800	326T	TEFC	**EM4115T-8**	10,208	GE3	30.28	621	94.5	200	131	1, 24, 69
575 volts												
1/3	1800	56	TEFC	**M3534-5**	560	GE3	11.35	20	68	575	0.6	1, 13, 38
1/2	3600	56	TEFC	**M3537-5**	603	GE3	11.35	19	68	575	0.8	1, 12, 38
	1800	56	TEFC	**M3538-5**	641	GE3	11.35	22	74	575	0.8	1, 12, 38
	1200	56	TEFC	**M3539-5**	965	GE3	11.35	23	72	575	1	1, 12, 38
3/4	3600	56	TEFC	**M3541-5**	664	GE3	11.35	21	74	575	1	1, 12, 38
	1800	56	TEFC	**M3542-5**	685	GE3	11.35	26	75.5	575	1.2	1, 12, 38
	1200	56H	TEFC	**M3543-5**	985	GE3	12.84	33	77	575	1.2	38
		143T	TEFC	**M3543T-5**	985	GE3	13.41	34	77	575	1.2	1, 38
1	3600	56	TEFC	**EM3545-5**	1,056	GE3	11.97	27	77	575	1.2	12
	1800	56	TEFC	**EM3546-5**	1,079	GE3	12.23	38	85.5	575	1.2	1
		143T	TEFC	**EM3546T-5**	1,079	GE3	12.31	34	85.5	575	1.2	1
	1200	56H	TEFC	**EM3556-5**	1,393	GE3	12.91	41	82.5	575	1.4	
		145T	TEFC	**EM3556T-5**	1,393	GE3	13.31	40	82.5	575	1.4	1

(a) See notes on inside back flap. Cast iron frame

*IP54 when Drain Fitting Kit #HA5027A03 is installed in the weep holes (48 thru 256T frame motors only)

For larger Hp motors, please refer to the "Large Motors and Generators" section of the catalog.

General purpose, three phase, totally enclosed, foot mounted

Hp	RPM	NEMA Frame	Enclosure	Catalog Number	List Price	Disc. Sym.	"C" Dim.	Aprx. Wt. (lb)	Full Load Efficiency	Voltage	Full Load Amps	Notes (a)
575 volts (continued)												
1 1/2	3600	143T	TEFC	**EM3550T-5**	1,195	GE3	12.29	36	84	575	1.5	1
	1800	145T	TEFC	**EM3554-5**	1,199	GE3	13.23	41	86.5	575	1.8	1
		145T	TEFC	**EM3554T-5**	1,199	GE3	13.31	42	86.5	575	1.8	1
	1200	182T	TEFC	**EM3607T-5**	1,629	GE3	16.55	73	87.5	575	1.9	1
2	3600	56H	TEFC	**EM3555-5**	1,309	GE3	12.91	41	85.5	575	2	
		145T	TEFC	**EM3555T-5**	1,309	GE3	13.29	43	85.5	575	2	1
	1800	56H	TEFC	**EM3558-5**	1,268	GE3	12.91	45	86.5	575	2.3	1
		145T	TEFC	**EM3558T-5**	1,268	GE3	13.31	46	86.5	575	2.3	1
	1200	184T	TEFC	**EM3614T-5**	1,708	GE3	18.05	90	88.5	575	2.8	
3	3600	56H	TEFC	**EM3559-5**	1,434	GE3	13.79	50	86.5	575	2.9	1
		145T	TEFC	**EM3559T-5**	1,434	GE3	14.17	60	86.5	575	2.9	1
		182T	TEFC	**EM3610T-5**	1,452	GE3	15.16	56	86.5	575	2.9	1
	1800	182T	TEFC	**EM3611T-5**	1,301	GE3	16.55	73	89.5	575	3.3	1
		182T	TEFC	**EM3661T-5**	1,856	GE3	15.24	97	89.5	575	3.3	1
	1200	213T	TEFC	**EM3704T-5**	2,221	GE3	19.01	129	89.5	575	3.7	1
5	3600	184T	TEFC	**EM3613T-5**	1,610	GE3	16.54	75	88.5	575	4.7	1
	1800	184T	TEFC	**EM3615T-5**	1,344	GE3	18.05	89	89.5	575	5.3	1
		184T	TEFC	**EM3665T-5**	1,899	GE3	15.24	108	89.5	575	5.3	1
	1200	215T	TEFC	**EM3708T-5**	2,510	GE3	19.76	154	89.5	575	5.8	1
7 1/2	3600	184T	TEFC	**EM3616T-5**	2,124	GE3	18.05	98	89.5	575	6.8	1
		213T	TEFC	**EM3709T-5**	2,412	GE3	17.89	115	89.5	575	7	1
	1800	213T	TEFC	**EM3710T-5**	1,938	GE3	19.02	123	91.7	575	7.6	1
		213T	TEFC	**EM3770T-5**	2,477	GE3	18.45	170	91.7	575	7.5	1
10	3600	215T	TEFC	**EM3711T-5**	2,445	GE3	17.89	119	90.2	575	9.5	1
	1800	215T	TEFC	**EM3714T-5**	2,188	GE3	20.52	165	91.7	575	9.6	1
		215T	TEFC	**EM3774T-5**	2,778	GE3	18.45	185	91.7	575	9.8	1
15	3600	215T	TEFC	**EM3713T-5**	3,450	GE3	20.52	169	91	575	13.6	1
		254T	TEFC	**EM2394T-5**	4,150	GE3	23.28	245	91	575	14.1	1
	1800	254T	TEFC	**EM2333T-5**	3,371	GE3	23.28	258	92.4	575	14.6	1
20	3600	256T	TEFC	**EM4106T-5**	4,555	GE3	23.28	252	91	575	18.2	1
	1800	256T	TEFC	**EM2334T-5**	4,087	GE3	23.28	290	93	575	19.2	1
25	3600	284TS	TEFC	**EM4107T-5**	5,943	GE3	24.70	335	91.7	575	22	1
	1800	284T	TEFC	**EM4103T-5**	5,345	GE3	27.76	380	93.6	575	24	1
30	3600	286TS	TEFC	**EM4108T-5**	7,061	GE3	24.70	331	91.7	575	26.5	1
	1800	286T	TEFC	**EM4104T-5**	6,340	GE3	27.76	408	93.6	575	29	1
40	3600	324TS	TEFC	**EM4109T-5**	9,677	GE3	28.78	522	92.4	575	37	1
	1800	324T	TEFC	**EM4110T-5**	8,291	GE3	30.28	575	94.1	575	39	1
50	3600	326TS	TEFC	**EM4114T-5**	10,586	GE3	28.78	574	93	575	45	1
	1800	326T	TEFC	**EM4115T-5**	9,058	GE3	30.28	623	94.5	575	46	1
60	1800	364T	TEFC	**EM4314T-5**	13,071	GE3	33.48	919	95	575	54.4	1
75	1800	365T	TEFC	**EM4316T-5**	15,284	GE3	33.48	958	95.4	575	68.7	1
100	1800	405T	TEFC	**EM4400T-5**	18,927	GE3	38.04	1208	95.4	575	89.6	1
125	1800	444T	TEFC	**EM4410T-5**	23,429	GE3	44.75	1669	95.4	575	115	1
		444T	TEFC	**EM4410T-5E**	26,401	GE3	44.62	1626	95.8	575	111	1, 56, 100
150	1800	445T	TEFC	**EM4406T-5**	26,951	GE3	44.75	2151	95.8	575	135	1
		445T	TEFC	**EM4406T-5E**	26,951	GE3	44.62	1770	96.2	575	132	1, 56, 100

(a) See notes on inside back flap.
Cast iron frame
Red catalog number indicates **NEW** product.
*IP54 when Drain Fitting Kit #HA5027A03 is installed in the weep holes (48 thru 256T frame motors only)
For larger Hp motors, please refer to the "Large Motors and Generators" section of the catalog.

General purpose, three phase, totally enclosed, C-Face, foot mounted

1/4 thru 100 Hp

IP44*

Features:

- Locked DE bearing to allow mounting in any configuration
- 60 Hz designs with 50 Hz information on 2,4,6 pole 1-125 Hp ratings
- Suitable for inverter use per NEMA MG1 Part 31.4.4.2 unless note 38 is indicated
- Simple F1 to F2 conversion on cast iron frames
- Designed for longevity with a 3 year warranty on premium efficient Super-E® motors

Applications:

- Fans
- Pumps
- Blowers
- Conveyors
- Compressors
- Industrial machines
- Other general purpose applications

Hp	RPM	NEMA Frame	Enclosure	Catalog Number	List Price	Disc. Sym.	"C" Dim.	Aprx. Wt. (lb)	Full Load Efficiency	Voltage	Full Load Amps	Notes (a)
230/460 volts												
1/4	1800	56C	TENV	**CNM3454/35**	863	GE3	11.06	31	80	230/460	0.4	1, 30, 48
	1200	56C	TENV	**CNM3531**	1,097	GE3	11.06	31	68	208-230/460	0.5	13
1/3	3600	56C	TENV	**CNM3457**	634	GE3	10.25	21	72	208-230/460	0.7	30, 38
	1800	56C	TEFC	**CM3534**	552	GE3	11.35	21	68	230/460	0.8	13, 30, 38
1/2	3600	56C	TEFC	**CM3537**	645	GE3	11.35	20	68	230/460	1	12, 30, 38
	1800	56C	TEFC	**CM3538**	611	GE3	11.35	23	74	230/460	1	12, 30, 38
		56C	TENV	**CNM3538/35**	883	GE3	11.06	28	80	230/460	0.8	1, 30, 48
	1200	56C	TEFC	**CM3539**	1,008	GE3	11.35	23	72	230/460	1.2	12, 30, 38
		56C	TENV	**CNM3539**	1,077	GE3	12.06	40	78.5	230/460	1	30
3/4	3600	56C	TEFC	**CM3541**	705	GE3	11.35	22	74	230/460	1.3	12, 30, 38
	1800	56C	TEFC	**CM3542**	649	GE3	11.35	26	75.5	208-230/460	1.5	12, 38
		56C	TENV	**CNM3542**	792	GE3	11.06	31	78.5	230/460	1.4	30
	1200	56C	TEFC	**CM3543**	1,028	GE3	12.85	23	77	208-230/460	1.5	30, 38
1	3600	56C	TEFC	**CEM3545**	1,102	GE3	12.25	33	77	230/460	1.4	1, 12, 30
	1800	56C	TEFC	**CEM3546**	1,261	GE3	12.23	36	85.5	230/460	1.4	1, 30
		56C	TENV	**CENM3546**	1,261	GE3	11.06	38	85.5	230/460	1.5	30
		143TC	TEFC	**CEM3546T**	1,135	GE3	13.29	36	85.5	230/460	1.5	1, 30
		143TC	TEFC	**CEM3581T**	1,610	GE3	13.03	54	85.5	230/460	1.5	1, 30
	1200	56C	TEFC	**CEM3556**	1,439	GE3	13.23	41	82.5	230/460	1.8	30
		143TC	TEFC	**CEM3556T**	1,456	GE3	13.29	43	82.5	230/460	1.8	1, 30
1 1/2	3600	56C	TEFC	**CEM3550**	1,242	GE3	13.25	37	84	230/460	1.9	1, 30
		143TC	TEFC	**CEM3550T**	1,258	GE3	13.29	40	84	230/460	1.9	1, 30
		143TC	TEFC	**CEM3583T**	1,698	GE3	13.05	55	85.5	230/460	2	1, 30
	1800	145TC	TEFC	**CEM3554T**	1,255	GE3	13.29	42	86.5	230/460	2.2	1, 30
		145TC	TEFC	**CEM3584T**	1,666	GE3	13.03	60	86.5	230/460	2.3	1, 30
	1200	182TC	TEFC	**CEM3607T**	1,747	GE3	16.55	77	87.5	230/460	2.4	1, 30
2	3600	56C	TEFC	**CEM3555**	1,355	GE3	13.25	46	85.5	230/460	2.5	1, 30
		145TC	TEFC	**CEM3555T**	1,372	GE3	13.29	44	85.5	230/460	2.5	1, 30
		145TC	TEFC	**CEM3586T**	1,777	GE3	13.03	60	85.5	230/460	2.5	1, 30
	1800	56C	TEFC	**CEM3558**	1,474	GE3	13.23	46	86.5	230/460	2.9	1, 30
		145TC	TEFC	**CEM3558T**	1,324	GE3	14.17	46	86.5	230/460	2.9	1, 30
		145TC	TEFC	**CEM3587T**	1,742	GE3	13.03	62	86.5	230/460	2.9	1, 30
	1200	184TC	TEFC	**CEM3614T**	1,826	GE3	18.05	97	88.5	230/460	3.5	1, 30
		184TC	TEFC	**CEM3664T**	2,200	GE3	16.00	115	88.5	230/460	3.2	1, 30
3	3600	56C	TEFC	**CEM3559**	1,480	GE3	14.12	50	86.5	230/460	3.6	1, 30
		145TC	TEFC	**CEM3559T**	1,497	GE3	14.17	52	86.5	230/460	3.6	1, 30
		182TC	TEFC	**CEM3610T**	1,571	GE3	15.18	50	86.5	230/460	3.6	1, 30
		182TC	TEFC	**CEM3660T**	1,968	GE3	16.00	90	86.5	230/460	3.8	1, 30
	1800	182TC	TEFC	**CEM3611T**	1,406	GE3	16.55	75	89.5	230/460	4.2	1, 30
		182TC	TEFC	**CEM3661T**	2,019	GE3	16.00	104	89.5	230/460	4.1	1, 30
	1200	213TC	TEFC	**CEM3704T**	2,450	GE3	19.76	141	89.5	230/460	4.6	1, 30
		213TC	TEFC	**CEM3764T**	2,860	GE3	19.20	173	89.5	230/460	4.5	1, 30

(a) See notes on inside back flap.

Cast iron frame

*IP54 when Drain Fitting Kit #HA5027A03 is installed in the weep holes (48 thru 256T frame motors only)

General purpose, three phase, totally enclosed, C-Face, foot mounted

Hp	RPM	NEMA Frame	Enclosure	Catalog Number	List Price	Disc. Sym.	"C" Dim.	Aprx. Wt. (lb)	Full Load Efficiency	Voltage	Full Load Amps	Notes (a)
230/460 volts (continued)												
5	3600	184TC	TEFC	**CEM3613T**	1,729	GE3	16.55	78	88.5	230/460	5.9	1, 30
		184TC	TEFC	**CEM3663T**	2,384	GE3	16.00	99	88.5	230/460	5.8	1, 30
	1800	184TC	TEFC	**CEM3615T**	1,449	GE3	18.05	93	89.5	230/460	6.7	1, 30
		184TC	TEFC	**CEM3665T**	2,062	GE3	16.00	114	89.5	230/460	6.6	1, 30
	1200	215TC	TEFC	**CEM3708T**	2,738	GE3	20.51	161	89.5	230/460	7.3	1, 30
		215TC	TEFC	**CEM3768T**	3,267	GE3	19.20	190	89.5	230/460	7.4	1, 30
7 1/2	3600	184TC	TEFC	**CEM3616T**	2,243	GE3	18.05	101	89.5	230/460	8.4	1, 30
		213TC	TEFC	**CEM3709T**	2,641	GE3	18.63	120	89.5	230/460	9	1, 30
		213TC	TEFC	**CEM3769T**	2,893	GE3	19.20	155	89.5	230/460	9	1, 30
	1800	213TC	TEFC	**CEM3710T**	2,142	GE3	19.76	134	91.7	230/460	9.4	1, 30
		213TC	TEFC	**CEM3770T**	2,799	GE3	19.20	170	91.7	230/460	9.5	1, 30
10	3600	215TC	TEFC	**CEM3711T**	2,674	GE3	18.63	121	90.2	230/460	11.8	1, 30
		215TC	TEFC	**CEM3771T**	3,336	GE3	19.20	182	90.2	230/460	11.8	1, 30
	1800	215TC	TEFC	**CEM3714T**	2,391	GE3	21.26	165	91.7	230/460	12	1, 30
		215TC	TEFC	**CEM3774T**	3,101	GE3	19.20	195	91.7	230/460	12.2	1, 30
15	3600	215TC	TEFC	**CEM3713T**	3,679	GE3	21.26	182	91	230/460	17	1, 30
		254TC	TEFC	**CEM2394T**	5,110	GE3	23.78	250	91	230/460	17.5	1, 30
	1800	254TC	TEFC	**CEM2333T**	4,222	GE3	23.78	269	92.4	230/460	18.1	1, 30
20	3600	256TC	TEFC	**CEM4106T**	5,515	GE3	23.78	265	91	230/460	23	1, 30
	1800	256TC	TEFC	**CEM2334T**	5,564	GE3	23.78	298	93	230/460	24	1, 30
25	3600	284TSC	TEFC	**CEM4107T**	7,217	GE3	24.71	346	91.7	230/460	29	1, 30
	1800	284TC	TEFC	**CEM4103T**	7,296	GE3	27.76	400	93.6	230/460	30	1, 30
30	3600	286TSC	TEFC	**CEM4108T**	8,335	GE3	26.39	389	91.7	230/460	33	1, 30
	1800	286TC	TEFC	**CEM4104T**	8,418	GE3	27.76	425	93.6	230/460	38	1, 30
40	3600	324TSC	TEFC	**CEM4109T**	11,148	GE3	28.78	600	92.4	230/460	46	1, 30
	1800	324TC	TEFC	**CEM4110T**	10,812	GE3	30.28	590	94.1	230/460	48	1, 30
50	3600	326TSC	TEFC	**CEM4114T**	12,057	GE3	28.78	591	93	230/460	56	1, 30
	1800	326TC	TEFC	**CEM4115T**	11,678	GE3	30.28	585	94.5	230/460	58	1, 30
60	3600	364TSC	TEFC	**CEM4310T**	16,472	GE3	31.31	830	93.6	230/460	67.3	1
	1800	364TC	TEFC	**CEM4314T**	16,286	GE3	33.44	915	95	230/460	68	1, 30
75	3600	365TSC	TEFC	**CEM4313T**	18,900	GE3	31.31	905	93.6	230/460	83.4	1
	1800	365TC	TEFC	**CEM4316T**	18,772	GE3	33.44	907	95.4	230/460	84.9	1, 30
100	1800	405TC	TEFC	**CEM4400T**	23,327	GE3	38.32	1360	95.4	230/460	112	1
200 volts												
1/2	1800	56C	TEFC	**CM3538-8**	779	GE3	11.35	23	74	200	2.2	12, 38
1	1800	56C	TEFC	**CEM3546-8**	1,261	GE3	12.23	38	85.5	200	3.5	1
575 volts												
1/3	1800	56C	TEFC	**CM3534-5**	552	GE3	11.35	21	68	575	0.6	13, 38
1/2	1800	56C	TEFC	**CM3538-5**	611	GE3	11.35	23	74	575	0.8	12, 38
3/4	1800	56C	TEFC	**CM3542-5**	649	GE3	11.35	26	75.5	575	1.2	12, 38
1	1800	56C	TEFC	**CEM3546-5**	1,261	GE3	12.23	38	85.5	575	1.2	1
		143TC	TEFC	**CEM3546T-5**	1,135	GE3	13.29	37	85.5	575	1.2	1
		143TC	TEFC	**CEM3581T-5**	1,610	GE3	13.03	54	85.5	575	1.2	1
1 1/2	3600	143TC	TEFC	**CEM3583T-5**	1,698	GE3	13.03	54	84	575	1.5	1
	1800	56C	TEFC	**CEM3554-5**	1,396	GE3	13.23	41	86.5	575	1.8	1
		145TC	TEFC	**CEM3554T-5**	1,255	GE3	13.29	42	86.5	575	1.8	1
		145TC	TEFC	**CEM3584T-5**	1,666	GE3	13.03	63	86.5	575	1.8	1
2	3600	145TC	TEFC	**CEM3586T-5**	1,777	GE3	13.05	60	86.5	575	2	1
	1800	56C	TEFC	**CEM3558-5**	1,474	GE3	13.23	45	86.5	575	2.3	1
		145TC	TEFC	**CEM3558T-5**	1,324	GE3	13.29	47	86.5	575	2.3	1
		145TC	TEFC	**CEM3587T-5**	1,742	GE3	13.03	61	86.5	575	2.3	1
3	3600	145TC	TEFC	**CEM3559T-5**	1,497	GE3	14.17	52	86.5	575	2.9	1
		182TC	TEFC	**CEM3610T-5**	1,571	GE3	16.53	58	86.5	575	2.9	1
		182TC	TEFC	**CEM3660T-5**	1,968	GE3	16.00	89	86.5	575	3	1
	1800	182TC	TEFC	**CEM3611T-5**	1,406	GE3	16.55	75	89.5	575	3.3	1
		182TC	TEFC	**CEM3661T-5**	2,019	GE3	16.00	102	89.5	575	3.3	1

(a) See notes on inside back flap.
Cast iron frame
*IP54 when Drain Fitting Kit #HA5027A03 is installed in the weep holes (48 thru 256T frame motors only)

General purpose, three phase, totally enclosed, C-Face, foot mounted

Hp	RPM	NEMA Frame	Enclosure	Catalog Number	List Price	Disc. Sym.	"C" Dim.	Aprx. Wt. (lb)	Full Load Efficiency	Voltage	Full Load Amps	Notes (a)
575 volts (continued)												
5	3600	184TC	TEFC	**CEM3613T-5**	1,729	GE3	16.55	78	88.5	575	4.7	1
		184TC	TEFC	**CEM3663T-5**	2,384	GE3	16.00	99	88.5	575	4.7	1
	1800	184TC	TEFC	**CEM3615T-5**	1,449	GE3	18.05	93	89.5	575	5.3	1
		184TC	TEFC	**CEM3665T-5**	2,062	GE3	16.00	113	89.5	575	5.3	1
7 1/2	3600	213TC	TEFC	**CEM3769T-5**	2,893	GE3	19.20	179	89.5	575	7.4	1
	1800	213TC	TEFC	**CEM3710T-5**	2,142	GE3	19.76	129	91.7	575	7.6	1
		213TC	TEFC	**CEM3770T-5**	2,799	GE3	19.20	170	91.7	575	7.5	1
10	3600	215TC	TEFC	**CEM3711T-5**	2,674	GE3	18.63	123	90.2	575	9.5	1
		215TC	TEFC	**CEM3771T-5**	3,336	GE3	19.20	182	90.2	575	9.3	1
	1800	215TC	TEFC	**CEM3714T-5**	2,391	GE3	21.26	165	91.7	575	9.6	1
		215TC	TEFC	**CEM3774T-5**	3,101	GE3	19.20	231	91.7	575	9.8	1
15	3600	215TC	TEFC	**CEM3713T-5**	3,679	GE3	21.26	169	91	575	13.6	1
	1800	254TC	TEFC	**CEM2333T-5**	4,222	GE3	23.78	263	92.4	575	14.6	1
20	3600	256TC	TEFC	**CEM4106T-5**	5,515	GE3	23.80	280	91	575	18	1
	1800	256TC	TEFC	**CEM2334T-5**	5,564	GE3	23.78	289	93	575	19.2	1
25	1800	284TC	TEFC	**CEM4103T-5**	7,296	GE3	27.76	401	93.6	575	24	1
30	1800	286TC	TEFC	**CEM4104T-5**	8,418	GE3	27.76	449	93.6	575	31	1

(a) See notes on inside back flap.
Cast iron frame
Red catalog number indicates **NEW** product.
Custom induction motors available up to 30,000 Hp.
Contact your sales representative for additional information.
*IP54 when Drain Fitting Kit #HA5027A03 is installed in the weep holes (48 thru 256T frame motors only)

General purpose, three phase, totally enclosed, C-Face, footless

1/4 thru 30 Hp

IP44*

Features:

- Footless design reduces weight and improves safety
- Locked DE bearing to allow mounting in any configuration
- 60 Hz designs with 50 Hz information on 2,4,6 pole 1-125 Hp ratings
- Suitable for inverter use per NEMA MG1 Part 31.4.4.2 unless note 38 is indicated
- Designed for longevity with a 3 year warranty on premium efficient Super-E® motors

Applications:

- Fans
- Pumps
- Blowers
- Conveyors
- Compressors
- Industrial machines
- Other general purpose applications

Hp	RPM	NEMA Frame	Enclosure	Catalog Number	List Price	Disc. Sym.	"C" Dim.	Aprx. Wt. (lb)	Full Load Efficiency	Voltage	Full Load Amps	Notes (a)
230/460 volts												
1/4	1800	56C	TENV	**KENM3454**	845	GE3	11.06	26	80	230/460	0.4	30
		56C	TEFC	**KM3454**	542	GE3	11.35	19	64	230/460	0.7	12, 30, 38
		56C	TENV	**KNM3454**	573	GE3	10.25	18	64	208-230/460	0.7	2, 20, 30, 38
	1200	56C	TEFC	**VM3531**	828	GE3	11.35	20	68	230/460	0.7	13, 30, 38
1/3	3600	56C	TENV	**KM3457**	553	GE3	10.25	20	72	230/460	0.7	13, 30, 38
		56C	TENV	**KNM3457 /35**	891	GE3	11.07	29	78.5	230/460	0.5	1, 13, 30, 48
	1800	56C	TENV	**KENM3534**	932	GE3	11.06	33	80	230/460	0.6	1, 30, 48
		56C	TENV	**KNM3534**	634	GE3	10.25	23	70	208-230/460	0.7	2, 30, 38
		56C	TEFC	**VM3534**	586	GE3	11.35	21	68	230/460	0.8	13, 30, 38
	1200	56C	TENV	**KENM3535**	1,370	GE3	11.06	35	81.5	230/460	0.6	1, 30, 48
		56C	TEFC	**VM3535**	930	GE3	11.35	22	70	230/460	0.9	13, 30, 38
1/2	3600	56C	TEFC	**VM3537**	636	GE3	11.35	20	68	230/460	1	12, 30, 38
		56C	TENV	**VNM3537**	894	GE3	11.06	32	77	230/460	0.8	1, 12, 48
	1800	56C	TEFC	**VEM3538**	1,016	GE3	12.23	31	82.5	230/460	0.8	1, 12, 30, 48
		56C	TENV	**VENM3538**	1,056	GE3	11.06	32	84	230/460	0.9	30
		56C	TEFC	**VM3538**	598	GE3	11.35	23	74	230/460	1	12, 30, 38
		56C	TENV	**VNM3538**	731	GE3	10.25	22	74	208-230/460	1	2, 20, 30, 38
	1200	56C	TEFC	**VM3539**	998	GE3	11.35	24	72	230/460	1.2	12, 30, 38
3/4	3600	56C	TEFC	**VM3541**	695	GE3	11.35	21	74	230/460	1.3	12, 30, 38
		56C	TENV	**VNM3541**	955	GE3	11.06	36	84	208-230/460	1	12, 30, 48
	1800	56C	TEFC	**VEM3542**	1,079	GE3	12.23	35	84	230/460	1.1	1, 12, 30
		56C	TENV	**VENM3542**	1,153	GE3	11.06	33	84	230/460	1.1	1, 30, 48
		56C	TEFC	**VM3542**	636	GE3	11.35	26	75.5	208-230/460	1.5	12, 30, 38
		56C	TENV	**VNM3542**	741	GE3	11.75	31	75	230/460	1.3	12, 30, 38
	1200	56C	TEFC	**VM3543**	1,021	GE3	12.85	32	77	208-230/460	1.5	30, 38
		143TC	TEFC	**VM3543T**	1,021	GE3	13.41	33	77	208-230/460	1.5	30, 38
1	3600	56C	TEFC	**VEM3545**	1,102	GE3	12.24	32	77	230/460	1.4	1, 12, 30
	1800	56C	TEFC	**VEM3546**	1,120	GE3	12.23	36	85.5	230/460	1.5	1, 30
		56C	TEFC	**VEM3581**	1,610	GE3	12.47	52	85.5	230/460	1.5	1, 30
		56C	TENV	**VENM3546**	1,261	GE3	11.06	38	85.5	230/460	1.5	1, 30
		143TC	TEFC	**VEM3546T**	1,135	GE3	12.29	36	85.5	230/460	1.5	1, 30
		143TC	TEFC	**VEM3581T**	1,610	GE3	13.03	54	85.5	230/460	1.5	1, 30
		143TC	TENV	**VENM3546T**	1,278	GE3	12.12	40	85.5	230/460	1.5	1, 30, 48
		143TC	TENV	**VENM3581T**	1,610	GE3	11.36	56	85.5	230/460	1.5	1, 30, 48
	1200	56C	TEFC	**VEM3556**	1,439	GE3	13.23	43	82.5	230/460	1.8	1, 30
		145TC	TEFC	**VEM3556T**	1,456	GE3	13.29	41	82.5	230/460	1.8	1, 30
1 1/2	3600	56C	TEFC	**VEM3550**	1,242	GE3	12.24	35	84	230/460	1.9	1, 30
		143TC	TEFC	**VEM3550T**	1,258	GE3	12.29	38	84	230/460	1.9	30
	1800	56C	TEFC	**VEM3554**	1,240	GE3	13.23	42	86.5	230/460	2.2	1, 30
		145TC	TEFC	**VEM3554T**	1,255	GE3	13.29	41	86.5	230/460	2.2	1, 30
		145TC	TEFC	**VEM3584T**	1,666	GE3	13.03	60	86.5	230/460	2.3	1, 30
	1200	56C	TEFC	**VEM3557**	1,487	GE3	15.62	72	87.5	230/460	2.4	1, 30
		145TC	TEFC	**VEM3557T**	1,503	GE3	15.68	72	87.5	230/460	2.4	1, 30

(a) See notes on inside back flap. Cast iron frame *IP54 when Drain Fitting Kit #HA5027A03 is installed in the weep holes (48 thru 256T frame motors only)

For more information visit baldor.abb.com

General purpose, three phase, totally enclosed, C-Face, footless

Hp	RPM	NEMA Frame	Enclosure	Catalog Number	List Price	Disc. Sym.	"C" Dim.	Aprx. Wt. (lb)	Full Load Efficiency	Voltage	Full Load Amps	Notes (a)
230/460 volts (continued)												
2	3600	56C	TEFC	**VEM3555**	1,355	GE3	13.24	43	85.5	230/460	2.5	1
		143TC	TEFC	**VEM3555T**	1,372	GE3	12.29	41	85.5	230/460	2.5	1
	1800	56C	TEFC	**VEM3558**	1,309	GE3	13.23	46	86.5	230/460	2.9	1, 30
		145TC	TEFC	**VEM3558T**	1,324	GE3	12.29	47	86.5	230/460	2.9	1, 30
		145TC	TEFC	**VEM3587T**	1,742	GE3	13.03	59	86.5	230/460	2.9	1, 30
	1200	184TC	TEFC	**VEM3614T**	1,826	GE3	18.05	91	88.5	230/460	3.3	1, 30
		184TC	TEFC	**VEM3664T**	2,200	GE3	15.98	113	88.5	230/460	3.2	1, 30
3	3600	56C	TEFC	**VEM3559**	1,480	GE3	14.10	50	86.5	230/460	3.6	1, 30
		145TC	TEFC	**VEM3559T**	1,497	GE3	14.17	50	86.5	230/460	3.6	1, 30
		182TC	TEFC	**VEM3610T**	1,571	GE3	15.18	50	86.5	230/460	3.6	1, 30
	1800	56C	TEFC	**VEM3561**	1,429	GE3	15.62	70	89.5	230/460	4.2	1, 30
		145TC	TEFC	**VEM3561T**	1,446	GE3	15.68	70	89.5	230/460	4.2	1, 30
		182TC	TEFC	**VEM3611T**	1,406	GE3	16.55	73	89.5	230/460	4.2	1, 30
		182TC	TEFC	**VEM3661T**	2,019	GE3	16.00	98	89.5	230/460	4.1	1, 30
	1200	213TC	TEFC	**VEM3704T**	2,450	GE3	19.76	132	89.5	230/460	4.6	1, 30
5	3600	184TC	TEFC	**VEM3613T**	1,729	GE3	16.55	75	88.5	230/460	5.9	1, 30
		184TC	TEFC	**VEM3663T**	2,384	GE3	15.98	99	88.5	230/460	6.3	1, 30
	1800	184TC	TEFC	**VEM3615T**	1,449	GE3	18.05	88	89.5	230/460	6.7	1, 30
		184TC	TEFC	**VEM3665T**	2,062	GE3	16.00	109	89.5	230/460	6.6	1, 30
	1200	215TC	TEFC	**VEM3708T**	2,738	GE3	21.26	149	90.2	230/460	7.4	8, 30
7 1/2	3600	184TC	TEFC	**VEM3616T**	2,243	GE3	18.05	96	89.5	230/460	8.1	1, 30
		213TC	TEFC	**VEM3709T**	2,641	GE3	18.56	96	89.5	230/460	8.1	1, 30
	1800	213TC	TEFC	**VEM3710T**	2,412	GE3	19.76	129	91.7	230/460	9.4	1, 30
		213TC	TEFC	**VEM3770T**	2,799	GE3	19.20	170	91.7	230/460	9.5	1, 30
10	3600	215TC	TEFC	**VEM3711T**	2,674	GE3	18.63	125	90.2	230/460	12.1	1, 30
	1800	215TC	TEFC	**VEM3714T**	2,694	GE3	21.26	165	91.7	230/460	12	1, 30
		215TC	TEFC	**VEM3774T**	3,101	GE3	19.20	197	91.7	230/460	12.2	1, 30
	1200	256TC	TEFC	**VEM2332T**	5,750	GE3	23.80	322	91	230/460	14.1	1, 30
15	3600	215TC	TEFC	**VEM3713T**	3,679	GE3	20.51	170	91	230/460	17	1, 30
		254TC	TEFC	**VEM2394T**	5,110	GE3	20.32	225	91	230/460	16.9	1, 30
	1800	254TC	TEFC	**VEM2333T**	4,757	GE3	23.80	268	92.4	230/460	18.1	1, 30
20	3600	256TC	TEFC	**VEM4106T**	5,515	GE3	23.80	229	91	230/460	23	1, 30
	1800	256TC	TEFC	**VEM2334T**	5,564	GE3	23.80	303	93	230/460	24	1, 30
25	3600	284TSC	TEFC	**VEM4107T**	7,217	GE3	22.40	283	91.7	230/460	29	1, 30
	1800	284TC	TEFC	**VEM4103T**	7,296	GE3	27.76	425	93.6	230/460	30	1, 30
30	3600	286TSC	TEFC	**VEM4108T**	8,335	GE3	22.40	299	91.7	230/460	68	1, 30
	1800	286TC	TEFC	**VEM4104T**	8,418	GE3	27.76	286	93.6	230/460	38	1, 30
575 volts												
1/3	1800	56C	TEFC	**VM3534-5**	586	GE3	11.35	21	68	575	0.6	13, 38
1/2	3600	56C	TEFC	**VM3537-5**	636	GE3	11.35	19	68	575	0.8	12, 38
	1800	56C	TEFC	**VEM3538-5**	1,016	GE3	12.23	32	82.5	575	.6	12
		56C	TEFC	**VM3538-5**	672	GE3	11.35	22	74	575	0.8	12, 38
3/4	3600	56C	TEFC	**VM3541-5**	695	GE3	11.35	21	74	575	1	12, 38
	1800	56C	TEFC	**VEM3542-5**	1,079	GE3	12.23	33	84	575	.9	12
		56C	TEFC	**VM3542-5**	715	GE3	11.35	26	75.5	575	1.2	12, 38
1	3600	56C	TEFC	**VEM3545-5**	1,102	GE3	11.97	27	77	575	1.2	1, 12
	1800	56C	TEFC	**VEM3546-5**	1,120	GE3	12.23	35	85.5	575	1.2	1
		143TC	TEFC	**VEM3546T-5**	1,135	GE3	12.29	36	85.5	575	1.2	1
		143TC	TEFC	**VEM3581T-5**	1,610	GE3	13.03	53	85.5	575	1.2	1
1 1/2	3600	56C	TEFC	**VEM3550-5**	1,242	GE3	12.23	38	84	575	1.5	1
		143TC	TEFC	**VEM3550T-5**	1,258	GE3	12.29	35	84	575	1.5	1
	1800	56C	TEFC	**VEM3554-5**	1,240	GE3	14.10	50	88.5	575	1.7	1
		145TC	TEFC	**VEM3554T-5**	1,255	GE3	13.29	41	86.5	575	1.8	1
		145TC	TEFC	**VEM3584T-5**	1,666	GE3	13.03	58	86.5	575	1.8	1
2	3600	56C	TEFC	**VEM3555-5**	1,355	GE3	13.23	41	85.5	575	2	1
	1800	56C	TEFC	**VEM3558-5**	1,309	GE3	13.23	45	86.5	575	2.3	1
		145TC	TEFC	**VEM3558T-5**	1,324	GE3	13.29	46	86.5	575	2.3	1
		145TC	TEFC	**VEM3587T-5**	1,742	GE3	13.03	60	86.5	575	2.3	1

(a) See notes on inside back flap. Cast iron frame
Red catalog number indicates **NEW** product.
*IP54 when Drain Fitting Kit #HA5027A03 is installed in the weep holes (48 thru 256T frame motors only)

General purpose, three phase, totally enclosed, C-Face, footless

Hp	RPM	NEMA Frame	Enclosure	Catalog Number	List Price	Disc. Sym.	"C" Dim.	Aprx. Wt. (lb)	Full Load Efficiency	Voltage	Full Load Amps	Notes (a)
575 volts (continued)												
3	3600	56C	TEFC	**VEM3559-5**	1,480	GE3	14.10	50	86.5	575	2.9	1
		182TC	TEFC	**VEM3610T-5**	1,571	GE3	15.18	53	86.5	575	2.9	1
	1800	182TC	TEFC	**VEM3611T-5**	1,406	GE3	16.55	71	89.5	575	3.3	1
		182TC	TEFC	**VEM3661T-5**	2,019	GE3	16.00	98	89.5	575	3.3	1
5	3600	184TC	TEFC	**VEM3613T-5**	1,729	GE3	16.55	74	88.5	575	4.7	1
	1800	184TC	TEFC	**VEM3615T-5**	1,449	GE3	18.05	88	89.5	575	5.3	1
		184TC	TEFC	**VEM3665T-5**	2,062	GE3	16.00	110	89.5	575	5.3	1
7 1/2	3600	213TC	TEFC	**VEM3709T-5**	2,641	GE3	19.28	101	89.5	575	6.8	1
	1800	213TC	TEFC	**VEM3710T-5**	2,412	GE3	19.76	123	91.7	575	7.6	1
		213TC	TEFC	**VEM3770T-5**	2,799	GE3	19.20	170	91.7	575	7.5	1
10	3600	215TC	TEFC	**VEM3711T-5**	2,674	GE3	18.63	118	90.2	575	9.5	1
	1800	215TC	TEFC	**VEM3714T-5**	2,694	GE3	21.26	165	91.7	575	9.6	1
		215TC	TEFC	**VEM3774T-5**	3,101	GE3	19.20	231	91.7	575	9.8	1
15	3600	215TC	TEFC	**VEM3713T-5**	3,679	GE3	21.26	169	91	575	13.6	1
	1800	254TC	TEFC	**VEM2333T-5**	4,757	GE3	23.80	266	92.4	575	14.6	1
20	1800	256TC	TEFC	**VEM2334T-5**	5,564	GE3	23.80	296	93	575	19.2	1

(a) See notes on inside back flap.
Cast iron frame
Custom induction motors available up to 30,000 Hp.
Contact your sales representative for additional information.
*IP54 when Drain Fitting Kit #HA5027A03 is installed in the weep holes (48 thru 256T frame motors only)

General purpose, three phase, open drip proof, foot mounted

1/4 thru 450 Hp

IP22

Features:

- Suitable for inverter use per NEMA MG1 Part 31.4.4.2 unless note 38 is indicated
- 60 Hz designs with 50 Hz information on 2,4,6 pole 1-125 Hp ratings
- Designed for longevity with a 3 year warranty on premium efficient Super-E® motors
- Optimized airflow design providing higher horsepower in a smaller package

Applications:

- Fans
- Pumps
- Blowers
- Conveyors
- Compressors
- Industrial machines
- Other general purpose applications

Hp	RPM	NEMA Frame	Catalog Number	List Price	Disc. Sym.	"C" Dim.	Aprx. Wt. (lb)	Full Load Efficiency	Voltage	Full Load Amps	Notes (a)
230/460 volts											
1/4	1800	48	**EM30003**	703	G03	9.62	21	69.5	230/460	0.5	13, 15, 30, 38
	1200	48	**EM30004**	777	G03	9.13	24	67.5	230/460	0.7	13, 15, 30, 38
		56	**EM31101**	777	G03	10.25	24	67.5	230/460	0.7	13, 15, 30, 38
1/3	3600	48	**EM30006**	738	G03	9.62	22	69.5	230/460	0.6	13, 15, 30, 38
	1800	48	**EM30007**	743	G03	9.13	24	73.4	230/460	0.7	13, 15, 30, 38
		56	**EM31104**	743	G03	10.25	24	73.4	230/460	0.7	13, 15, 30, 38
	1200	48	**EM30008**	813	G03	9.75	27	71.4	230/460	0.9	13, 15, 30, 38
		56	**EM31105**	813	G03	10.88	27	71.4	230/460	0.9	13, 15, 30, 38
1/2	3600	48	**EM30009**	794	G03	9.62	24	73.4	230/460	0.8	12, 15, 30, 38
		56	**EM31107**	794	G03	10.25	24	73.4	230/460	0.8	12, 15, 30, 38
	1800	48	**EM30010**	818	G03	11.12	31	78.2	230/460	0.8	12, 15, 30, 38
		56	**EM31108**	818	G03	11.75	31	78.2	230/460	0.8	12, 15, 30, 38
		56	**EM31108A**	929	G03	11.75	31	78.2	230/460	0.8	12, 15, 30, 38
	1200	48	**EM30011**	894	G03	10.63	34	75.3	230/460	1	12, 15, 30, 38
		56	**EM31109**	894	G03	11.75	34	75.3	230/460	1	12, 15, 30, 38
	900	56	**M3160**	1,359	G03	12.07	38	70	230/460	1.3	
3/4	3600	48	**EM30012**	790	G03	9.13	22	76.8	230/460	1.2	12, 15, 30, 38
		56	**EM31111**	790	G03	10.25	24	76.8	230/460	1.2	12, 15, 30, 38
	1800	56	**EM31112**	901	G03	11.07	32	81.1	230/460	1	12, 15, 30
		56	**EM31112A**	1,011	G03	11.07	32	81.1	208-230/460	1	12, 15
	1200	56	**EM31153**	1,100	G03	12.07	39	81.7	230/460	1.3	1, 15, 30
		143T	**M3153T**	965	G03	12.32	33	77	230/460	1.5	30, 38
1	3600	56	**EM31115**	810	G03	10.88	27	77	230/460	1.6	12, 15, 30, 38
	1800	56	**EM31116**	948	G03	11.07	29	83.5	230/460	1.5	1, 15, 30
		56	**EM31116A**	993	G03	11.07	29	85.5	230/460	1.5	1, 15, 30
		143T	**EM3116T**	1,039	G03	11.12	34	85.5	230/460	1.5	1, 30
	1200	56H	**EM31156**	1,386	G03	11.75	41	82.5	230/460	1.8	1, 15, 30
		145T	**EM3156T**	1,197	G03	11.62	36	82.5	230/460	1.8	1, 30
	900	182T	**EM3216T**	1,963	G03	15.00	65	75.5	230/460	2.1	1, 30
1 1/2	3600	56	**EM31120**	837	G03	11.07	34	84	230/460	2	1, 15, 30
		143T	**EM3120T**	1,008	G03	11.12	33	84	230/460	2	1, 30
	1800	56	**EM31154**	1,039	G03	12.07	36	86.5	230/460	2.2	1, 15, 30
		56	**EM31154A**	1,149	G03	12.07	41	86.5	230/460	2.2	1, 15, 30
		145T	**EM3154T**	1,087	G03	11.62	37	86.5	230/460	2.2	1, 30
	1200	56H	**EM31159**	1,334	G03	14.00	54	84	230/460	2.6	1, 15, 30
		182T	**EM3207T**	1,401	G03	15.00	66	86.5	230/460	2.5	1, 30
	900	184T	**EM3220T**	2,384	G03	16.50	82	78.5	230/460	3	1, 30

(a) See notes on inside back flap.
Red catalog number indicates **NEW** product.

General purpose, three phase, open drip proof, foot mounted

Hp	RPM	NEMA Frame	Catalog Number	List Price	Disc. Sym.	"C" Dim.	Aprx. Wt. (lb)	Full Load Efficiency	Voltage	Full Load Amps	Notes (a)
230/460 volts (continued)											
2	3600	56	**EM31155**	942	G03	12.07	43	85.5	230/460	2.6	1, 15, 30
		143T	**EM3155T**	1,182	G03	11.62	41	85.5	230/460	2.5	1, 30
	1800	145T	**EM3157TA**	1,442	G03	12.13	44	86.5	230/460	2.9	1, 30
		56H	**EM31157**	1,090	G03	12.63	45	86.5	230/460	3	1, 15, 30
		145T	**EM3157T**	1,164	G03	12.12	40	86.5	230/460	2.9	1, 30
	1200	184T	**EM3215T**	1,433	G03	16.50	79	87.5	230/460	3.4	1, 30
	900	213T	**EM3303T**	2,944	G03	17.45	111	86.5	230/460	3.5	1, 30
3	3600	56H	**EM31158**	1,056	G03	11.75	50	85.5	230/460	3.8	1, 15, 30
		145T	**EM3158T**	1,197	G03	13.00	46	85.5	230/460	3.8	1, 30
	1800	182T	**EM3211T**	1,255	G03	15.00	69	89.5	230/460	4.2	1, 30
		182T	**EM3211TA**	1,545	G03	15.00	65	89.5	230/460	4.4	1, 30
	1200	213T	**EM3305T**	1,823	G03	16.32	119	88.5	230/460	4.5	1, 30
5	3600	182T	**EM3212T**	1,307	G03	13.62	61	86.5	230/460	6	1, 30
	1800	184T	**EM3218T**	1,375	G03	16.50	84	89.5	230/460	6.6	1, 30
		184T	**EM3218TA**	1,680	G03	16.50	84	89.5	230/460	6.6	1, 30
	1200	215T	**EM3309T**	2,389	G03	17.45	139	89.5	230/460	7.4	1, 30
	900	254T	**EM2504T**	4,741	G03	23.19	240	88.5	230/460	7.6	1, 30
7 1/2	3600	184T	**EM3219T**	2,073	G03	15.00	74	88.5	230/460	8.6	1, 30
	1800	213T	**EM3311T**	2,019	G03	16.32	115	91	230/460	9.7	1, 30
	1200	254T	**EM2506T**	2,864	G03	23.19	239	90.2	230/460	11	1, 30
	900	256T	**EM2508T**	5,933	G03	23.19	260	89.5	230/460	11.7	1, 30
10	3600	213T	**EM3312T**	2,371	G03	16.32	121	89.5	230/460	12	1, 30
	1800	215T	**EM3313T**	2,444	G03	17.45	128	91.7	230/460	12.5	1, 30
	1200	256T	**EM2511T**	3,726	G03	23.19	255	91.7	230/460	14.3	1, 30
15	3600	215T	**EM3314T**	3,367	G03	16.32	124	90.2	230/460	17.5	1, 30
	1800	254T	**EM2513T**	3,460	G03	21.69	211	93	230/460	17.7	1, 30
		254T	**EM2513T-CI**	3,710	G03	20.63	238	93	230/460	17.8	1, 30
	1200	284T	**EM2524T**	5,024	G03	23.81	278	91.7	230/460	20.5	1, 30
20	3600	254T	**EM2514T**	3,955	G03	21.69	191	91	230/460	23.5	1, 30
	1800	256T	**EM2515T**	4,276	G03	21.69	225	93	230/460	23.5	1, 30
		256T	**EM2515T-12**	4,846	G03	21.69	225	93	230/460	23.5	1, 25, 30
		256T	**EM2515T-CI**	4,662	G03	22.38	281	93	230/460	24	1, 30
	1200	286T	**EM2528T**	6,114	G03	23.81	302	92.4	230/460	27	1, 30
25	3600	256T	**EM2516T**	4,749	G03	21.69	222	91.7	230/460	28	1, 30
	1800	284T	**EM2531T**	5,213	G03	25.06	331	93.6	230/460	30	1, 30
		284T	**EM2531T-12**	6,117	G03	25.06	307	93.6	230/460	30	1, 25, 30
		284T	**EM2531T-CI**	5,683	G03	23.44	382	93.6	230/460	31	1, 30
	1200	324T	**EM2532T**	7,385	G03	27.69	411	93	230/460	34	1, 30
30	3600	284TS	**EM2534T**	5,605	G03	22.44	308	91.7	230/460	35	1, 30
	1800	286T	**EM2535T**	5,701	G03	25.06	335	94.1	230/460	35	1, 30
		286T	**EM2535T-12**	6,605	G03	25.06	339	94.1	230/460	35	1, 25, 30
		286T	**EM2535T-CI**	6,213	G03	24.94	240	94.1	230/460	35	1, 30
	1200	326T	**EM2536T**	7,703	G03	28.69	380	93.6	230/460	38	1, 30
40	3600	286TS	**EM2538T**	7,221	G03	22.44	329	92.4	230/460	46	1, 30
		286TS	**EM2538T-CI**	7,871	G03	23.57	402	92.4	230/460	46	1, 30
	1800	324T	**EM2539T**	7,436	G03	27.19	396	94.1	230/460	49	1, 30
		324T	**EM2539T-12**	8,838	G03	27.19	397	94.1	230/460	47	1, 25, 30
		324T	**EM2539T-CI**	8,107	G03	26.13	538	94.1	230/460	46	1, 30
	1200	364T	**EM2540T**	10,418	G03	29.81	598	94.1	230/460	51	1, 30
		364T	**EM2540T-CI**	10,973	G03	29.70	801	94.1	230/460	49.4	1, 30

(a) See notes on inside back flap.
Cast iron frame

General purpose, three phase, open drip proof, foot mounted

Hp	RPM	NEMA Frame	Catalog Number	List Price	Disc. Sym.	"C" Dim.	Aprx. Wt. (lb)	Full Load Efficiency	Voltage	Full Load Amps	Notes (a)
230/460 volts (continued)											
50	3600	324TS	**EM2542T**	7,864	G03	25.69	394	93	230/460	56	1, 30
		324TS	**EM2542T-CI**	8,918	G03	24.62	548	93	230/460	56	1, 30
	1800	326T	**EM2543T**	8,205	G03	27.69	467	94.5	230/460	57	1, 30
		326T	**EM2543T-12**	9,607	G03	27.69	468	94.5	230/460	61	1, 25, 30
		326T	**EM2543T-CI**	8,946	G03	27.63	570	94.5	230/460	57	1, 30
		326TS	**EM2543TS-12**	9,607	G03	26.19	469	94.5	230/460	61	1, 25, 30
	1200	365T	**EM2544T**	12,582	G03	33.72	762	94.1	230/460	62	1, 30
		365T	**EM2544T-CI**	13,285	G03	29.70	722	94.1	230/460	60.3	1, 30
60	3600	326TS	**EM2546T**	9,951	G03	25.19	458	93.6	230/460	68	1, 30
	1800	364T	**EM2547T**	10,331	G03	30.69	615	95	230/460	68	1, 30
		364T	**EM2547T-12**	12,534	G03	30.69	620	95	230/460	68	1, 25, 30
		364T	**EM2547T-CI**	11,260	G03	29.70	745	95	230/460	69.5	1, 30
		364TS	**EM2547TS-12**	12,534	G03	28.56	613	95	230/460	68	1, 25, 30
	1200	404T	**EM2548T**	15,500	G03	34.47	888	94.5	230/460	76	1, 30
		404T	**EM2548T-4CI**	16,865	G03	34.00	1009	95	460	70.4	1
75	3600	364TS	**EM2549T**	13,051	G03	25.81	502	93.6	230/460	82	1, 30
	1800	365T	**EM2551T**	12,681	G03	33.72	744	95	230/460	87	1, 30
		365T	**EM2551T-12**	14,884	G03	33.72	758	95	230/460	85	1, 25
		365T	**EM2551T-CI**	13,819	G03	29.70	762	95	230/460	86.5	1, 30
		365TS	**EM2551TS-12**	14,884	G03	31.59	749	95	230/460	85	1, 25
	1200	405T	**EM2552T-4**	18,777	G03	34.00	1067	95	460	86.9	1, 25
100	3600	365TS	**EM2550T**	13,952	G03	27.81	562	93.6	230/460	110	1, 30
	1800	404T	**EM2555T**	14,752	G03	34.47	930	95.4	230/460	118	1, 30
		404T	**EM2555T-12**	17,952	G03	36.97	946	95.4	230/460	118	1, 25
		404T	**EM2555T-4**	14,752	G03	36.97	896	95.4	460	115	1, 25
		404T	**EM2555T-CI**	16,080	G03	34.00	1038	95.4	230/460	115	1, 30
		404TS	**EM2555TS-12**	17,952	G03	33.97	941	95.4	230/460	118	1, 25
	1200	444T	**EM2583T-4**	20,667	G03	39.56	1455	95	460	116	1, 25
125	3600	404TS	**EM2554T-4**	17,509	G03	31.85	894	94.1	460	143	1, 25
		404TS	**EM2554T-4CI**	20,891	G03	31.00	997	95	460	143	1
	1800	405T	**EM2559T-4**	18,099	G03	34.47	955	95.4	460	143	1, 25
		405T	**EM2559T-4CI**	19,724	G03	34.00	1118	95.4	460	141	1
		405TS	**EM2559TS-4**	18,099	G03	34.97	1238	95.4	460	143	1, 25
	1200	445T	**EM2557T-4**	22,321	G03	39.71	1513	95	460	146	1, 25
150	3600	405TS	**EM2556T-4**	21,599	G03	31.85	980	94.1	460	166	1, 25
	1800	444T	**EM2558T-4**	20,103	G03	39.71	1528	96.2	460	170	1, 25
		444TS	**EM2558TS-4**	20,103	G03	35.96	1519	96.2	460	170	1
	1200	445T	**EM2560T-4**	26,286	G03	39.71	1572	95.4	460	175	1, 25
200	3600	444TS	**EM2562T-4**	24,476	G03	35.88	1364	95.4	460	221	1, 25
	1800	445T	**EM2563T-4**	25,122	G03	39.56	1625	95.8	460	222	1, 25
	1200	447T	**EM2564T-4**	34,554	G03	43.06	1827	95.4	460	232	1, 25
250	3600	445TS	**EM2565T-4**	28,713	G03	35.81	1539	95.4	460	274	1, 25
	1800	447T	**EM25254T-4**	28,171	G03	43.06	2036	96.2	460	275	1, 25
300	3600	445TS	**EM2568T-4**	44,878	G03	35.88	1539	95.8	460	324	1, 25
	1800	449T	**EM25694T-4**	42,960	G03	48.06	2151	95.8	460	331	1, 25
350	3600	449TS	**EM2571T-4**	51,360	G03	44.31	1899	95.4	460	380	1, 25
	1800	449T	**EM2572T-4**	50,744	G03	48.12	2694	96.2	460	382	1, 25
400	3600	449TS	**EM25402T-4**	60,255	G03	44.31	2083	96.2	460	431	1, 25
	1800	449T	**EM25404T-4**	55,073	G03	48.12	2799	96.2	460	437	1, 25
450	3600	449TS	**EM25452T-4**	66,351	G03	44.31	2284	96.2	460	494	1, 25
	1800	449T	**EM25454T-4**	62,284	G03	48.12	2888	96.2	460	507	1, 25

(a) See notes on inside back flap.
Cast iron frame

General purpose, three phase, open drip proof, foot mounted

Hp	RPM	NEMA Frame	Catalog Number	List Price	Disc. Sym.	"C" Dim.	Aprx. Wt. (lb)	Full Load Efficiency	Voltage	Full Load Amps	Notes (a)
200 volts											
1	1800	143T	**EM3116T-8**	1,171	G03	11.12	34	85.5	200	3.5	1, 68
1 1/2	1800	145T	**EM3154T-8**	1,223	G03	11.62	37	86.5	200	5.1	1, 68
2	1800	145T	**EM3157T-8**	1,311	G03	12.12	40	86.5	200	6.5	1, 68
3	3600	145T	**EM3158T-8**	1,197	G03	13.00	51	85.5	200	8.5	1, 68
	1800	182T	**EM3211T-8**	1,413	G03	15.00	71	89.5	200	9.7	1, 68
5	3600	182T	**EM3212T-8**	1,307	G03	15.00	69	90.2	200	12.8	1, 68
	1800	184T	**EM3218T-8**	1,548	G03	16.50	84	89.5	200	15.3	1, 68
7 1/2	3600	184T	**EM3219T-8**	2,073	G03	15.00	77	88.5	200	20	1, 68
	1800	213T	**EM3311T-8**	2,274	G03	16.32	114	91	200	22.2	1, 68
10	3600	213T	**EM3312T-8**	2,371	G03	16.32	121	89.5	200	27.3	1, 68
	1800	215T	**EM3313T-8**	2,753	G03	17.45	129	91.7	200	29.5	1, 68
15	3600	215T	**EM3314T-8**	3,367	G03	17.45	131	91.7	200	40	1, 68
	1800	254T	**EM2513T-8**	3,898	G03	21.69	209	93	200	40.7	1, 68
20	3600	254T	**EM2514T-8**	3,955	G03	21.69	190	91	200	53	1, 24, 69
	1800	256T	**EM2515T-8**	4,276	G03	21.69	227	93	200	54.3	1, 24, 69
25	3600	256T	**EM2516T-8**	4,749	G03	21.69	220	91.7	200	65	1, 24, 69
	1800	284T	**EM2531T-8**	5,213	G03	25.06	333	93.6	200	70	1, 24, 69
30	3600	284TS	**EM2534T-8**	5,605	G03	22.44	320	93.6	200	78	1, 24, 69
	1800	286T	**EM2535T-8**	5,701	G03	25.06	278	94.1	200	81	1, 24, 69
40	3600	286TS	**EM2538T-8**	7,221	G03	22.44	362	92.4	200	105	1, 24, 69
		286TS	**M2538T-8**	6,068	G03	23.56	259	91.7	200	104	16, 24, 69
	1800	324T	**EM2539T-8**	7,436	G03	27.19	434	94.1	200	109	1, 24, 69
50	3600	324TS	**EM2542T-8**	7,864	G03	25.69	375	93	200	129	1, 24, 69
	1800	326T	**EM2543T-8**	8,205	G03	27.69	467	94.5	200	132	1, 24, 69
60	1800	364T	**EM2547T-8**	10,331	G03	30.69	623	95	200	160	1, 24, 69
75	1800	365T	**EM2551T-8**	12,681	G03	29.70	783	95	200	199	1, 24, 69
575 volts											
1/3	1800	56	**EM31104-5**	743	G03	9.51	24	73.4	575	0.5	15, 38
1/2	1800	56	**EM31108-5**	818	G03	11.01	31	78.2	575	0.7	15, 38
3/4	1800	56	**EM31112-5**	901	G03	11.07	33	81.5	575	0.9	15
1	1800	56	**EM31116-5**	948	G03	11.07	38	85.5	575	1.2	15
		143T	**EM3116T-5**	1,039	G03	11.12	34	85.5	575	1.2	1
1 1/2	1800	145T	**EM3154T-5**	1,087	G03	11.62	37	86.5	575	1.8	1
2	1800	145T	**EM3157T-5**	1,164	G03	12.12	39	86.5	575	2.3	1
3	1800	182T	**EM3211T-5**	1,255	G03	15.00	69	89.5	575	3.4	1
5	3600	182T	**EM3212T-5**	1,307	G03	15.00	76	90.2	575	4.5	1
	1800	184T	**EM3218T-5**	1,375	G03	16.50	82	89.5	575	5.3	1
7 1/2	3600	184T	**EM3219T-5**	2,073	G03	16.50	92	90.2	575	6.7	1
	1800	213T	**EM3311T-5**	2,019	G03	16.32	114	91	575	7.8	1
10	1800	215T	**EM3313T-5**	2,444	G03	17.45	123	91.7	575	10	1
15	1800	254T	**EM2513T-5**	3,460	G03	21.69	273	93	575	14.1	1
20	1800	256T	**EM2515T-5**	4,276	G03	21.69	227	93	575	18.9	1
25	1800	284T	**EM2531T-5**	5,213	G03	25.06	312	93.6	575	24.5	1
30	1800	286T	**EM2535T-5**	5,701	G03	25.06	333	94.1	575	28	1
40	1800	324T	**EM2539T-5**	7,436	G03	27.19	397	94.1	575	40	1
50	1800	326T	**EM2543T-5**	8,205	G03	27.69	465	94.5	575	46	1
60	1800	364T	**EM2547T-5**	10,331	G03	30.69	430	95	575	56	1
75	1800	365T	**EM2551T-5**	12,681	G03	33.72	740	95	575	68	1
100	1800	404T	**EM2555T-5**	14,752	G03	36.97	943	95.4	575	93	1
125	1800	405T	**EM2559T-5**	18,099	G03	34.47	960	95.4	575	114	1
150	1800	444T	**EM2558T-5**	20,103	G03	39.56	1535	96.2	575	136	1

(a) See notes on inside back flap.
Cast iron frame
Red catalog number indicates **NEW** product.
Custom induction motors available up to 30,000 Hp.
Contact your sales representative for additional information.

General purpose, three phase, open drip proof, C-Face, foot mounted

1/3 thru 125 Hp

IP22

Features:

- Locked DE bearing to allow mounting in any configuration**
- Suitable for inverter use per NEMA MG1 Part 31.4.4.2 unless note 38 is indicated
- 60 Hz designs with 50 Hz information on 2,4,6 pole 1-125 Hp ratings
- Designed for longevity with a 3 year warranty on premium efficient Super-E® motors
- Optimized airflow design providing higher horsepower in a smaller package

Applications:

- Fans
- Pumps
- Blowers
- Conveyors
- Compressors
- Industrial machines
- Other general purpose applications

Hp	RPM	NEMA Frame	Catalog Number	List Price	Disc. Sym.	"C" Dim.	Aprx. Wt. (lb)	Full Load Efficiency	Voltage	Full Load Amps	Notes (a)
1/3	1800	56C	**CEM31104**	789	G03	10.10	24	73.4	230/460	0.7	15, 30, 38
1/2	3600	56C	**CEM31107**	840	G03	10.10	20	73.4	230/460	0.8	15, 30, 38
	1800	56C	**CEM31108**	865	G03	11.60	31	78.2	230/460	0.8	15, 30, 38
3/4	1800	56C	**CEM31112**	947	G03	11.06	35	81.1	230/460	1	15, 30
1	3600	56C	**CEM31115**	1,018	G03	11.06	37	78.5	230/460	1.45	15
	1800	143TC	**CEM3116T**	1,233	G03	11.62	35	85.5	230/460	1.5	1, 30
	1200	145TC	**CEM3156T**	1,260	G03	12.13	41	82.5	230/460	1.8	1
1 1/2	3600	143TC	**CEM3120T**	1,070	G03	11.63	34	84	230/460	2	1
	1800	145TC	**CEM3154T**	1,286	G03	11.62	31	86.5	230/460	2.2	1, 30
	1200	182TC	**CEM3207T**	1,520	G03	15.00	68	86.5	230/460	2.5	1
2	3600	56C	**CEM31155**	1,153	G03	12.06	43	85.5	230/460	2.6	15, 30
	1800	145TC	**CEM3157T**	1,373	G03	12.12	41	86.5	230/460	2.9	1, 30
	1200	184TC	**CEM3215T**	1,551	G03	16.5	82	87.5	230/460	3.4	1
3	3600	145TC	**CEM3158T**	1,260	G03	13.00	46	85.5	230/460	3.8	1, 30
	1800	182TC	**CEM3211T**	1,531	G03	15.00	71	89.5	230/460	4.2	1, 30
	1200	213TC	**CEM3305T**	2,090	G03	17.06	131	88.5	230/460	4.5	1
5	3600	182TC	**CEM3212T**	1,426	G03	13.62	64	86.5	230/460	6	1, 30
	1800	184TC	**CEM3218T**	1,666	G03	16.50	87	89.5	230/460	6.6	1, 30
	1200	215TC	**CEM3309T**	2,656	G03	18.19	141	89.5	230/460	7.4	1
7 1/2	3600	184TC	**CEM3219T**	2,192	G03	15.00	77	88.5	230/460	8.6	1, 30
	1800	213TC	**CEM3311T**	2,541	G03	17.06	118	91	230/460	9.7	1, 30
	1200	254TC	**CEM2506T**	3,399	G03	23.19	248	90.2	230/460	11	1
10	3600	213TC	**CEM3312T**	2,638	G03	17.06	121	89.5	230/460	12	1, 30
	1800	215TC	**CEM3313T**	3,020	G03	18.19	133	91.7	230/460	12.5	1, 30
	1200	256TC	**CEM2511T**	4,262	G03	23.19	255	91.7	230/460	14.3	1, 30
15	3600	215TC	**CEM3314T**	3,634	G03	17.06	128	90.2	230/460	17.5	1, 30
	1800	254TC	**CEM2513T**	4,433	G03	21.69	213	93	230/460	17.7	1, 30
	1200	284TC	**CEM2524T**	5,984	G03	23.81	300	91.7	230/460	20.5	1, 30
20	3600	254TC	**CEM2514T**	4,490	G03	21.69	194	91	230/460	23.5	1, 30
	1800	256TC	**CEM2515T**	4,812	G03	21.69	231	93	230/460	23.5	1, 30
	1200	286TC	**CEM2528T**	7,074	G03	25.06	369	92.4	230/460	27	1, 30
25	3600	256TC	**CEM2516T**	5,284	G03	21.69	219	91.7	230/460	28	1, 30
	1800	284TC	**CEM2531T**	6,173	G03	25.06	336	93.6	230/460	30	1, 30
	1200	324TC	**CEM2532T**	8,717	G03	27.69	383	93	230/460	34	1, 30
30	3600	284TSC	**CEM2534T**	6,565	G03	22.44	320	91.7	230/460	35	1, 30
	1800	286TC	**CEM2535T**	6,661	G03	25.06	378	94.1	230/460	35	1, 30
	1200	326TC	**CEM2536T**	9,035	G03	28.69	482	93.6	230/460	39	1, 30

(a) See notes on inside back flap.
Custom induction motors available up to 30,000 Hp.
**ODP motors retain IP rating when mounted in horizontal position only.
Contact your sales representative for additional information.
Red catalog number indicates **NEW** product.

General purpose, three phase, open drip proof, C-Face, foot mounted

Hp	RPM	NEMA Frame	Catalog Number	List Price	Disc. Sym.	"C" Dim.	Aprx. Wt. (lb)	Full Load Efficiency	Voltage	Full Load Amps	Notes (a)
40	3600	286TSC	**CEM2538T**	8,181	G03	22.44	330	92.4	230/460	46	1, 30
	1800	324TC	**CEM2539T**	8,769	G03	27.19	378	94.1	230/460	49	1, 30
50	3600	324TSC	**CEM2542T**	9,197	G03	25.68	375	93	230/460	56	1
	1800	326TC	**CEM2543T**	9,537	G03	27.69	494	94.5	230/460	57	1, 30
60	3600	326TSC	**CEM2546T**	11,283	G03	25.19	472	93.6	230/460	68	1
	1800	364TC	**CEM2547T**	11,868	G03	30.69	632	95	230/460	68	1, 30
75	3600	364TSC	**CEM2549T**	14,588	G03	25.81	475	93.6	230/460	82	1
	1800	365TC	**CEM2551T**	14,217	G03	33.72	457	95	230/460	87	1, 30
100	3600	365TSC	**CEM2550T**	15,489	G03	37.81	574	93.6	230/460	110	1
	1800	404TC	**CEM2555T**	16,526	G03	36.97	945	95.4	230/460	118	1, 30
125	3600	404TSC	**CEM2554T-4**	19,282	G03	31.85	894	94.1	460	143	1, 25
	1800	405TC	**CEM2559T-4**	19,872	G03	34.47	955	95.4	460	143	1, 25

(a) See notes on inside back flap.
Custom induction motors available up to 30,000 Hp.
**ODP motors retain IP rating when mounted in horizontal position only.
Contact your sales representative for additional information.
Red catalog number indicates **NEW** product.

General purpose, three phase, open drip proof, C-Face, footless

1/4 thru 30 Hp

IP22

Features:

- Footless design reduces weight and improves safety
- Locked DE bearing to allow mounting in any configuration**
- Suitable for inverter use per NEMA MG1 Part 31.4.4.2 unless note 38 is indicated
- 60 Hz designs with 50 Hz information on 2,4,6 pole 1-125 Hp ratings
- Designed for longevity with a 3 year warranty on premium efficient Super-E® motors
- Optimized airflow design providing higher horsepower in a smaller package

Applications:

- Fans
- Pumps
- Blowers
- Conveyors
- Compressors
- Industrial machines
- Other general purpose applications

Hp	RPM	NEMA Frame	Catalog Number	List Price	Disc. Sym.	"C" Dim.	Aprx. Wt. (lb)	Full Load Efficiency	Voltage	Full Load Amps	Notes (a)
1/4	1800	56C	**KEM30003**	749	G03	11.35	21	69.5	230/460	0.5	15, 30, 38
1/3	3600	56C	**KEM30006**	784	G03	11.22	22	69.5	230/460	0.6	15, 30, 38
	1800	56C	**VEM31104**	789	G03	11.22	24	73.4	230/460	0.7	15, 30, 38
1/2	3600	56C	**VEM31107**	840	G03	11.22	24	73.4	230/460	0.8	15, 30, 38
	1800	56C	**VEM31108**	865	G03	12.72	31	78.2	230/460	0.8	15, 30, 38
	1200	56C	**VEM31109**	940	G03	13.35	34	75.3	230/460	1	15, 30, 38
3/4	3600	56C	**VEM31111**	837	G03	11.22	25	76.8	230/460	1.2	15, 30, 38
	1800	56C	**VEM31112**	947	G03	12.23	32	81.1	230/460	1	15, 30
	1200	56C	**VEM31153**	1,146	G03	13.23	39	81.7	230/460	1.3	15, 30
		143TC	**VM3153T**	998	G03	13.41	32	77	230/460	1.5	30, 38
1	3600	56C	**VEM31115**	856	G03	11.84	27	77	230/460	1.6	15, 30, 38
	1800	56C	**VEM31116**	995	G03	12.23	37	83.5	230/460	1.5	15, 30
		143TC	**VEM3116T**	1,233	G03	12.25	38	85.5	230/460	1.5	1, 30
	1200	143TC	**VEM3156T**	1,260	G03	13.25	39	82.5	230/460	1.8	1, 30
1 1/2	3600	56C	**VEM31120**	883	G03	12.23	34	84	230/460	2	15, 30
		143TC	**VEM3120T**	1,070	G03	12.25	34	84	230/460	2	1, 30
	1800	56C	**VEM31154**	1,085	G03	13.23	35	86.5	230/460	2.2	15, 30
		145TC	**VEM3154T**	1,286	G03	13.25	37	86.5	230/460	2.2	1, 30
	1200	145TC	**VEM3159T**	1,464	G03	15.92	68	86.5	230/460	2.5	1, 30
2	3600	56C	**VEM31155**	1,153	G03	13.23	43	85.5	230/460	2.6	15, 30
		143TC	**VEM3155T**	1,245	G03	13.25	43	86.5	230/460	2.5	1, 30
	1800	56C	**VEM31157**	1,136	G03	14.12	48	86.5	230/460	3	15, 30
		145TC	**VEM3157T**	1,220	G03	13.25	43	86.5	230/460	2.9	1, 30
	1200	184TC	**VEM3215T**	1,551	G03	18.03	82	87.5	230/460	3.4	1, 30
3	3600	56C	**VEM31158**	1,102	G03	13.24	50	85.5	230/460	3.8	15, 30
		145TC	**VEM3158T**	1,260	G03	14.18	50	85.5	230/460	3.7	1, 30
	1800	145TC	**VEM3161T**	1,307	G03	15.92	74	89.5	230/460	4.2	1, 30
		182TC	**VEM3211T**	1,531	G03	16.54	74	89.5	230/460	4.2	1, 30
	1200	213TC	**VEM3305T**	2,090	G03	17.94	137	88.5	230/460	4.5	1, 30
5	3600	182TC	**VEM3212T**	1,426	G03	16.54	64	86.5	230/460	6	1, 30
	1800	184TC	**VEM3218T**	1,666	G03	18.03	92	89.5	230/460	6.6	1, 30
	1200	215TC	**VEM3309T**	2,656	G03	19.07	141	89.5	230/460	7.4	1, 30
7 1/2	3600	184TC	**VEM3219T**	2,192	G03	16.54	77	88.5	230/460	8.6	1, 30
	1800	213TC	**VEM3311T**	2,541	G03	17.94	120	91	230/460	9.7	1, 30
10	3600	213TC	**VEM3312T**	2,638	G03	17.94	121	89.5	230/460	12	1, 30
	1800	215TC	**VEM3313T**	3,020	G03	19.07	132	91.7	230/460	12.5	1, 30
15	3600	215TC	**VEM3314T**	3,634	G03	17.94	131	90.2	230/460	17.5	1, 30
	1800	254TC	**VEM2513T**	4,433	G03	22.25	234	93	230/460	17.7	1, 30
20	3600	254TC	**VEM2514T**	4,490	G03	22.25	185	91	230/460	23.5	1, 30
	1800	256TC	**VEM2515T**	4,812	G03	22.25	220	93	230/460	23.5	1, 30
25	3600	254TC	**VEM2516T**	5,284	G03	22.00	233	91.7	230/460	28	1, 30
	1800	284TC	**VEM2531T**	6,173	G03	25.50	377	93.6	230/460	30	1, 30
30	3600	284TSC	**VEM2534T**	6,565	G03	25.10	320	91.7	230/460	35	1, 30

(a) See notes on inside back flap. **ODP motors retain IP rating when mounted in horizontal position only.
Custom induction motors available up to 30,000 Hp. Contact your sales representative for additional information.

General purpose, F-2 mount, three phase, TEFC and ODP, foot mounted

1 thru 100 Hp

TEFC IP44* | **ODP IP22**

Features:

- Suitable for inverter use per NEMA MG1 Part 31.4.4.2 unless note 38 is indicated
- Designed for longevity with a 3 year warranty on premium efficient Super-E® motors
- Dynamically balanced rotor to increase bearing life
- Cast iron or heavy gauge steel design

Applications:

- Fans
- Pumps
- Blowers
- Conveyors
- Compressors
- Industrial machines
- Other general purpose F-2 applications

Hp	RPM	NEMA Frame	Catalog Number	List Price	Disc. Sym.	"C" Dim.	Aprx. Wt. (lb)	Full Load Efficiency	Voltage	Full Load Amps	Notes (a)
Totally enclosed fan cooled, 230/460 volts											
1	1800	143T	**EFM3546T**	1,215	GE3	12.31	35	85.5	230/460	1.5	1, 30
1 1/2	1800	145T	**EFM3554T**	1,350	GE3	13.31	41	86.5	230/460	2.2	1, 30
2	1800	145T	**EFM3558T**	1,428	GE3	13.31	41	86.5	230/460	2.9	1, 30
3	3600	182T	**EFM3610T**	1,452	GE3	15.14	73	86.5	230/460	3.6	1, 30
	1800	182T	**EFM3611T**	1,466	GE3	16.55	73	89.5	230/460	4.2	1, 30
5	3600	184T	**EFM3613T**	1,610	GE3	16.55	75	88.5	230/460	5.9	1, 30
	1800	184T	**EFM3615T**	1,513	GE3	18.06	91	89.5	230/460	6.7	1, 30
7 1/2	3600	213T	**EFM3709T**	2,412	GE3	17.91	128	89.5	230/460	9	1, 30
	1800	213T	**EFM3710T**	2,183	GE3	19.01	128	91.7	230/460	9.4	1, 30
10	3600	215T	**EFM3711T**	2,445	GE3	17.91	119	90.2	230/460	11.8	1, 30
	1800	215T	**EFM3714T**	2,465	GE3	20.51	165	91.7	230/460	12	1, 30
15	3600	254T	**EFM2394T**	4,150	GE3	23.16	256	91	230/460	17.5	1, 30
	1800	254T	**EFM2333T**	3,797	GE3	23.28	256	92.4	230/460	18.1	1, 30
	1200	284T	**EFM4100T**	6,389	GE3	27.76	372	91.7	230/460	21	1, 30
20	1800	256T	**EFM2334T**	4,604	GE3	23.28	276	93	230/460	24	1, 30
	1200	286T	**EFM4102T**	8,507	GE3	27.76	437	91.7	230/460	27	1, 30
25	1800	284T	**EFM4103T**	6,022	GE3	27.76	452	93.6	230/460	30	1, 30
30	1800	286T	**EFM4104T**	7,143	GE3	27.76	408	93.6	230/460	36	1, 30
40	1800	324T	**EFM4110T**	9,342	GE3	30.28	572	94.1	230/460	48	1, 30
	1200	364T	**EFM4308T**	13,855	GE3	33.48	899	94.1	230/460	49.4	1, 30
50	3600	326TS	**EFM4114T**	10,586	GE3	28.78	578	93	230/460	56	1, 30
	1800	326T	**EFM4115T**	10,208	GE3	30.28	640	94.5	230/460	58	1, 30
	1200	365T	**EFM4312T**	16,742	GE3	33.49	868	94.1	230/460	61.7	1, 30
60	1800	364T	**EFM4314T**	14,687	GE3	33.44	800	95	230/460	68	1, 30
	1200	404T	**EFM4403T**	20,322	GE3	38.04	1322	95	230/460	69	1, 30
75	1800	365T	**EFM4316T**	17,173	GE3	33.44	840	95.4	230/460	84.9	1, 30
	1200	405T	**EFM4404T**	23,664	GE3	38.04	1300	94.5	230/460	86.8	1, 30
100	1800	405T	**EFM4400T**	18,927	GE3	38.31	1160	95.4	230/460	112	1, 30
	1200	444T	**EFM4409T-4**	28,561	GE3	44.75	1625	95	460	119	1
Open drip proof, 230/460 volts											
1	1800	145T	**EFM3116T**	1,171	GO3	11.12	35	85.5	230/460	1.5	1, 30
1 1/2	1800	145T	**EFM3154T**	1,223	GO3	11.62	38	86.5	230/460	2.2	1, 30
2	1800	145T	**EFM3157T**	1,311	GO3	12.12	40	86.5	230/460	2.9	1, 30
3	1800	182T	**EFM3211T**	1,413	GO3	15.00	68	89.5	230/460	4.2	1, 30
5	3600	182T	**EFM3212T**	1,307	GO3	13.62	61	86.5	230/460	6	1, 30
	1800	184T	**EFM3218T**	1,548	GO3	16.50	84	89.5	230/460	6.6	1, 30
7 1/2	3600	184T	**EFM3219T**	2,073	GO3	15.00	77	88.5	230/460	8.6	1, 30
	1800	213T	**EFM3311T**	2,274	GO3	16.32	114	91	230/460	9.7	1, 30
10	3600	213T	**EFM3312T**	2,371	GO3	16.32	107	89.5	230/460	12	1, 30
	1800	215T	**EFM3313T**	2,753	GO3	17.45	125	91.7	230/460	12.5	1, 30
15	3600	215T	**EFM3314T**	3,367	GO3	16.32	123	90.2	230/460	17.5	1, 30
	1800	254T	**EFM2513T**	3,898	GO3	21.69	214	93	230/460	17.7	1, 30

(a) See notes on inside back flap. Cast iron frame

*IP54 when Drain Fitting Kit #HA5027A03 is installed in the weep holes (48 thru 256T frame motors only)

General purpose, F-2 mount, three phase, TEFC and ODP, foot mounted

Hp	RPM	NEMA Frame	Catalog Number	List Price	Disc. Sym.	"C" Dim.	Aprx. Wt. (lb)	Full Load Efficiency	Voltage	Full Load Amps	Notes (a)
Open drip proof, 230/460 volts (continued)											
20	1800	256T	**EFM2515T**	4,276	G03	21.69	226	93	230/460	23.5	1, 30
25	1800	284T	**EFM2531T**	5,213	G03	25.06	313	93.6	230/460	30	1, 30
30	1800	286T	**EFM2535T**	5,701	G03	25.06	339	94.1	230/460	35	1, 30
40	1800	324T	**EFM2539T**	7,436	G03	27.19	392	94.1	230/460	49	1, 30
50	1800	326T	**EFM2543T**	8,205	G03	27.69	547	94.5	230/460	57	1, 30
60	1800	364T	**EFM2547T**	10,331	G03	30.69	622	95	230/460	68	1, 30
Open drip proof, 200 volts											
2	1800	145T	**EFM3157T-8**	1,324	G03	12.12	40	86.5	200	6.5	1, 68
3	1800	182T	**EFM3211T-8**	1,433	G03	15.00	70	89.5	200	9.7	1, 68
5	1800	184T	**EFM3218T-8**	1,574	G03	16.50	82	89.5	200	15.3	1, 68
7 1/2	1800	213T	**EFM3311T-8**	2,307	G03	16.32	111	91	200	22.3	1, 68
		213T	**FM3311T-8**	1,426	G03	17.00	96	88.5	200	23	16, 68
10	1800	215T	**EFM3313T-8**	2,793	G03	17.45	127	91.7	200	29.5	1, 68
15	1800	254T	**EFM2513T-8**	3,942	G03	21.69	209	93	200	40.7	1, 68
20	1800	256T	**EFM2515T-8**	4,326	G03	21.69	226	93	200	54.3	1, 24, 69

(a) See notes on inside back flap.
Custom induction motors available up to 30,000 Hp.
Contact your sales representative for additional information.

Severe duty motors

Baldor-Reliance® severe duty motors include features designed to protect against contamination, moisture, vibration and corrosion. These motors use Super-E® premium efficient electrical designs which are built to handle demanding duty cycles, provide high starting and peak torques, and operate over wide speed ranges. Severe Duty motors provide safe, long operating life, reliable performance, and reduced energy consumption in the toughest applications.

Key features:

- Heavy duty cast iron construction
- Premium efficient electrical designs
- Enhanced ingress protection
- Corrosion resistant epoxy finish

For Above NEMA severe duty motors, see ABB NXR US Series in the Large Motors and Generators section.

1/2 - 800 Horsepower

Product line		XT	XEX	841XL	661XL	Dirty Duty Plus	Quarry Duty	Crusher Duty
	Frame size range for stock products	143T-449T	143T-5000	143T-449T	182T-365T	56-256T	145T-215T	180T-588
Electrical features								
Efficiency	Baldor-Reliance motors meet or exceed all efficiency requirements for US, Canada and Mexico regulations	S	S	S	S	S	S	S
Torque	NEMA Design B torques as a minimum	S	S	S	S	S	–	–
	NEMA Design C: High torque	–	–	–	–	–	S	–
	NEMA Design A: High torque design exceed NEMA Design C	–	–	–	–	–	–	S
Service factor and temperature rise	1.15 service factor – continuous	S	S	S	S	S	S	–
	1.25 service factor up to 100 Hp, 1.15 service factor over 100 Hp – continuous	–	–	–	–	–	–	S
	Class F insulation with Class B rise @ 1.0 service factor	S	S	S	S	S	S	S
Inverter	Suitable for inverter use per NEMA MG1 Part 31.4.4.2	S	S	S	S	S	S	S
Mechanical features								
IP code	IP54 enclosure ingress protection	S	–	–	–	–	–	–
	IP55 enclosure ingress protection	–	S	–	–	–	S	S
	IP56 enclosure ingress protection	–	–	S	S	S	–	–
	IP66 enclosure ingress protection 5000 and 586/7/8 frames	–	S	–	–	–	–	S
Frame	Steel band frame – cast iron endplates and conduit box, steel fan	–	–	–	–	S	–	–
	Steel band frame – aluminum endplates and conduit box, steel fan	–	–	–	–	–	S	–
	Cast iron frame	S	S	S	S	–	–	S
	Cast iron frame, endplates, conduit box & fan cover	–	S	S	S	–	–	S
	(5000 frames have fabricated steel fan covers)	–	S	S	S	–	–	S
	Vertical lifting provisions for shaft up or down mounting	–	–	–	S	–	–	–
	Sealed joints between frame and endplates	–	S	S	S	S	S	S
Shaft seals	Neoprene V-ring slinger – DE & ODE	S	S	–	–	–	S	S
	Non-contact, rotating labyrinth seal – DE & ODE, 143T-L449T frames	–	–	S	S	S	–	–
	Non-contact, rotating labyrinth seal – DE & ODE, 5000 frames	–	S	S	S	S	–	–
	Large dome slinger – DE	–	–	–	S	–	–	–
Bearings and lubrication	Ball bearings designs	S	S	S	–	S	S	S
	Roller bearing designs available for belted applications	–	S	S	S	–	–	S
	Bearings: Non regreasable, lubed for life, double sealed	S	–	–	–	S	–	–
	Bearings: Regreasable with grease inlet fitting and outlet threaded plug or easy access relief on DE & ODE	S	S	–	–	–	S	S
	Bearings: Regreasable with PLS lubrication system 140T-449T frames. Grease inlet and auto relief fittings on DE & ODE (Also included on ECP/XEX & Crusher duty 360T-449T frames)	–	–	S	S	–	–	–
Paint	Paint: Corrosion resistant 2 part epoxy paint system, exceeding 300 hrs. salt fog test per ASTM B 117, epoxy coated rotor and stator	S	S	S	S	–	S	S
	Paint: Corrosion resistant 2 part epoxy paint system, exceeding 2,000 hrs. salt fog test per ASTM B 117, epoxy coated rotor and stator	–	–	–	–	S	–	–
Conduit box	Conduit box: Oversized, lipped cover, threaded NPT inlet and rotatable in 90 degree increments	–	S	S	S	–	–	S
	Conduit box: Oversized, split with lipped cover, terminal strips and threaded NPT inlet, rotatable in 90 degree increments with gland plate on 5000 and 586/7/8 frame	–	–	–	–	–	–	S
	Conduit box: Oversized, lipped cover, threaded NPT inlet, rotatable in 180 degree increments	–	–	–	–	S	S	–
Nameplate	Nameplate: Stainless steel embossed raised letter	–	S	S	S	S	–	S
	Nameplate: Stainless steel laser etched letter	S	S	–	–	–	S	–
Other key features								
Certifications and tests	Nameplate marked Class I, Division 2, Groups A, B, C, D with T2 temperature code or better	S	S	S	S	–	–	–
	Meets and exceeds IEEE 841	–	–	S	S	–	–	–
	Meets and exceeds IEEE 45	–	–	S	S	S	–	–
	Documented final motor test – ships with motor	–	–	S	S	–	–	–
Warranty	Warranty – in years from date of manufacture	3	3	5	5	3	3	3

S = Standard

NEW!

XT severe duty, three phase, totally enclosed, 230/460 volts, 460 and 575 volts, foot mounted

1 thru 300 Hp

IP54

Features:

- Robust cast iron frame construction
- Compatible with ABB Ability™ smart sensor
- Laser etched nameplate
- Multi-color leads, for ease of connections (320T frame and below)
- Suitable for inverter use per NEMA MG1 Part 31.4.4.2
- Division 2, Class I, Groups A, B, C, D markings on nameplate
- Sealed bearings on 143T-256T frames

Applications:

- Chemical, oil & gas
- Pulp & paper, forest products
- Metals & foundries
- Cement, aggregate & above ground mining
- Food processing
- Power generation
- Water & wastewater treatment

Hp	RPM	NEMA Frame	Catalog Number	List Price	Disc. Sym.	"C" Dim.	Aprx. Wt. (lb)	Full Load Efficiency	Voltage	Full Load Amps	Notes (a)
230/460 volts & 460 volts											
1	3600	143T	**XT3012T**	1,173	XTM	12.54	53	84	208-230/460	1.4	1
	1800	143T	**XT3014T**	1,151	XTM	12.54	58	87.5	208-230/460	1.5	1
	1200	145T	**XT3016T**	1,288	XTM	12.54	56	82.5	208-230/460	1.7	1
1.5	3600	143T	**XT30152T**	1,243	XTM	12.54	58	85.5	208-230/460	2	1
	1800	145T	**XT30154T**	1,296	XTM	12.54	63	88.5	208-230/460	2.1	1
	1200	182T	**XT30156T**	1,500	XTM	15.23	99	87.5	208-230/460	2.5	1
2	3600	143T	**XT3022T**	1,305	XTM	12.54	64	86.5	208-230/460	2.5	1
	1800	145T	**XT3024T**	1,335	XTM	12.54	65	88.5	208-230/460	2.8	1
	1200	182T	**XT3026T**	1,664	XTM	15.23	113	88.5	208-230/460	3.2	1
3	3600	145T	**XT3032T-140 ***	1,477	XTM	12.54	64	86.5	208-230/460	3.6	1
		182T	**XT3032T**	1,497	XTM	15.23	99	88.5	208-230/460	3.4	1
	1800	182T	**XT3034T**	1,447	XTM	15.23	105	89.5	208-230/460	4.1	1
	1200	213T	**XT3036T**	1,971	XTM	18.47	194	90.2	208-230/460	4.5	1
5	3600	184T	**XT3052T**	1,704	XTM	15.23	115	90.2	208-230/460	5.7	1
	1800	184T	**XT3054T**	1,598	XTM	15.23	115	89.5	208-230/460	6.5	1
	1200	215T	**XT3056T**	2,513	XTM	18.47	203	89.5	208-230/460	8	1
7.5	3600	184T	**XT3072T-180 ***	2,025	XTM	15.23	123	89.5	208-230/460	8.4	1
		213T	**XT3072T**	2,298	XTM	18.47	171	91	208-230/460	8.6	1
	1800	213T	**XT3074T**	2,236	XTM	18.47	203	91.7	208-230/460	9.5	1
	1200	254T	**XT3076T**	3,803	XTM	23.19	302	91	230/460	10.5	1, 30
10	3600	215T	**XT3102T**	2,674	XTM	18.47	198	91	208-230/460	11.9	1
	1800	215T	**XT3104T**	2,657	XTM	18.47	231	92.4	208-230/460	12.5	1
	1200	256T	**XT3106T**	4,617	XTM	23.19	322	91	230/460	14.1	1, 30
15	3600	215T	**XT3152T-210 ***	3,303	XTM	18.47	225	91	208-230/460	16.9	1
		254T	**XT3152T**	3,829	XTM	23.19	239	91	230/460	17.5	1, 30
	1800	254T	**XT3154T**	3,835	XTM	23.19	268	92.4	230/460	17.6	1, 30
	1200	284T	**XT3156T**	6,542	XTM	27.76	391	91.7	230/460	21	1, 30
20	3600	256T	**XT3202T**	4,729	XTM	23.19	229	91	230/460	23	1, 30
	1800	256T	**XT3204T**	4,591	XTM	23.19	322	93	230/460	24	1, 30
	1200	286T	**XT3206T**	7,863	XTM	27.76	437	91.7	230/460	27	1, 30
25	3600	254T	**XT3252T-250 ***	5,358	XTM	23.19	299	91.7	230/460	27	1, 30
		284TS	**XT3252TS**	5,989	XTM	26.39	396	91.7	230/460	28	1, 30
	1800	284T	**XT3254T**	5,657	XTM	27.76	437	93.6	230/460	30	1, 30
	1200	324T	**XT3256T**	8,985	XTM	30.28	605	93	230/460	32	1, 30

* Not Division 2
(a) See notes on inside back flap.
Cast iron frame
Red catalog number indicates **NEW** product.

NEW!

NEW!

XT severe duty, three phase, totally enclosed, 230/460 volts, 460 and 575 volts, foot mounted

Hp	RPM	NEMA Frame	Catalog Number	List Price	Disc. Sym.	"C" Dim.	Aprx. Wt. (lb)	Full Load Efficiency	Voltage	Full Load Amps	Notes (a)
230/460 volts & 460 volts (continued)											
30	3600	286TS	**XT3302TS**	6,930	XTM	26.39	444	91.7	230/460	34	1, 30
	1800	286T	**XT3304T**	6,709	XTM	27.76	460	93.6	230/460	38	1, 30
	1200	326T	**XT3306T**	10,307	XTM	30.28	630	93	230/460	39	1, 30
40	3600	324TS	**XT3402TS**	9,015	XTM	28.78	587	93	230/460	45	1, 30
	1800	324T	**XT3404T**	8,682	XTM	30.28	600	94.1	230/460	48	1, 30
	1200	364T	**XT3406T**	13,790	XTM	33.48	908	94.1	230/460	49.8	1
50	3600	326TS	**XT3502TS**	11,165	XTM	28.78	575	93	230/460	56	1, 30
	1800	326T	**XT3504T**	10,787	XTM	30.28	700	94.5	230/460	57	1, 30
	1200	365T	**XT3506T**	16,259	XTM	33.48	908	94.1	230/460	61.7	1
60	3600	364TS	**XT3602TS**	16,190	XTM	31.35	999	93.6	230/460	65.1	1
	1800	364T	**XT3604T**	14,997	XTM	33.48	947	95	230/460	70	1
	1200	404T	**XT3606T**	19,431	XTM	38.19	1,322	94.5	230/460	69.3	1
75	3600	365TS	**XT3752TS**	18,909	XTM	31.35	1,005	93.6	230/460	81.8	1
	1800	365T	**XT3754T**	17,759	XTM	33.48	965	95.4	230/460	86	1
	1200	405T	**XT3756T**	22,809	XTM	38.19	1,322	94.5	230/460	87	1
100	3600	405TS	**XT31002TS**	25,325	XTM	35.19	1,327	94.1	230/460	110	1
	1800	405T	**XT31004T**	24,665	XTM	38.19	1,375	95.4	230/460	114	1
	1200	444T	**XT31006T-4**	33,682	XTM	44.97	1,800	95	460	115	1
125	3600	444TS	**XT31252TS**	32,401	XTM	41.22	1,539	95	230/460	138	1
	1800	445T	**XT31254T-4**	31,111	XTM	44.97	1,669	95.4	460	144	1
	1200	445T	**XT31256T-4**	38,671	XTM	44.97	1,913	95	460	144	1
150	3600	445TS	**XT31502TS-4**	39,811	XTM	41.22	2,017	95	460	165	1
	1800	445T	**XT31504T-4**	36,729	XTM	44.97	1,826	95.8	460	169	1
	1200	447T	**XT31506T-4**	44,473	XTM	48.22	2,571	95.8	460	175	1
200	3600	447TS	**XT32002TS-4**	46,272	XTM	44.72	2,330	96.2	460	213	1
	1800	447T	**XT32004T-4**	44,483	XTM	48.22	2,676	96.2	460	222	1
	1200	449T	**XT32006T-4**	54,419	XTM	53.22	2,789	95.8	460	225	1
250	3600	449TS	**XT32502TS-4**	69,764	XTM	49.72	2,595	95.8	460	269	1
	1800	447T	**XT32504T-4**	56,369	XTM	53.22	2,888	96.2	460	276	1
	1200	449T	**XT32506T-4**	74,775	XTM	53.22	3,125	95.8	460	286	1
300	3600	449TS	**XT33002TS-4**	80,766	XTM	49.72	2,595	95.8	460	324	1
	1800	449T	**XT33004T-4**	66,235	XTM	53.47	3,130	96.2	460	334	1
575 volts											
1	3600	143T	**XT3012T-5**	1,173	XTM	12.54	53	84	575	1.4	1
	1800	143T	**XT3014T-5**	1,151	XTM	12.54	58	87.5	575	1.5	1
	1200	145T	**XT3016T-5**	1,288	XTM	12.54	56	82.5	575	1.7	1
1.5	3600	143T	**XT30152T-5**	1,243	XTM	12.54	58	85.5	575	2	1
	1800	145T	**XT30154T-5**	1,296	XTM	12.54	63	88.5	575	2.1	1
	1200	182T	**XT30156T-5**	1,500	XTM	15.23	99	87.5	575	2.5	1
2	3600	143T	**XT3022T-5**	1,305	XTM	12.54	64	86.5	575	2.5	1
	1800	145T	**XT3024T-5**	1,335	XTM	12.54	65	88.5	575	2.8	1
	1200	182T	**XT3026T-5**	1,664	XTM	15.23	113	88.5	575	3.2	1
3	3600	182T	**XT3032T-5**	1,497	XTM	15.23	99	88.5	575	3.4	1
	1800	182T	**XT3034T-5**	1,447	XTM	15.23	105	89.5	575	4.1	1
	1200	213T	**XT3036T-5**	1,971	XTM	18.47	194	90.2	575	4.5	1
5	3600	184T	**XT3052T-5**	1,704	XTM	15.23	115	90.2	575	5.7	1
	1800	184T	**XT3054T-5**	1,598	XTM	15.23	115	89.5	575	6.5	1
	1200	215T	**XT3056T-5**	2,513	XTM	18.47	203	89.5	575	8	1
7.5	3600	213T	**XT3072T-5**	2,298	XTM	18.47	171	91	575	8.6	1
	1800	213T	**XT3074T-5**	2,236	XTM	18.47	203	91.7	575	9.5	1
	1200	254T	**XT3076T-5**	3,803	XTM	23.19	302	91	575	10.5	1
10	3600	215T	**XT3102T-5**	2,674	XTM	18.47	198	91	575	11.9	1
	1800	215T	**XT3104T-5**	2,657	XTM	18.47	231	92.4	575	12.5	1
	1200	256T	**XT3106T-5**	4,617	XTM	23.19	322	91	575	14.1	1
15	3600	254T	**XT3152T-5**	3,829	XTM	23.19	239	91	575	17.5	1
	1800	254T	**XT3154T-5**	3,835	XTM	23.19	268	92.4	575	17.6	1
	1200	284T	**XT3156T-5**	6,542	XTM	27.76	391	91.7	575	21	1

(a) See notes on inside back flap.
Cast iron frame
Red catalog number indicates **NEW** product.

NEW!

NEW!

XT severe duty, three phase, totally enclosed, 230/460 volts, 460 and 575 volts, foot mounted

Hp	RPM	NEMA Frame	Catalog Number	List Price	Disc. Sym.	"C" Dim.	Aprx. Wt. (lb)	Full Load Efficiency	Voltage	Full Load Amps	Notes (a)
575 volts (continued)											
20	3600	256T	**XT3202T-5**	4,729	XTM	23.19	229	91	575	23	1
	1800	256T	**XT3204T-5**	4,591	XTM	23.19	322	93	575	24	1
	1200	286T	**XT3206T-5**	7,863	XTM	27.76	437	91.7	575	27	1
25	3600	284TS	**XT3252TS-5**	5,989	XTM	26.39	396	91.7	575	28	1
	1800	284T	**XT3254T-5**	5,657	XTM	27.76	437	93.6	575	30	1
	1200	324T	**XT3256T-5**	8,985	XTM	30.28	605	93	575	32	1
30	3600	286TS	**XT3302TS-5**	6,930	XTM	26.39	444	91.7	575	34	1
	1800	286T	**XT3304T-5**	6,709	XTM	27.76	460	93.6	575	38	1
	1200	326T	**XT3306T-5**	10,307	XTM	30.28	630	93	575	39	1
40	3600	324TS	**XT3402TS-5**	9,015	XTM	28.78	587	93	575	45	1
	1800	324T	**XT3404T-5**	8,682	XTM	30.28	600	94.1	575	48	1
	1200	364T	**XT3406T-5**	13,790	XTM	33.48	908	94.1	575	49.8	1
50	3600	326TS	**XT3502TS-5**	11,165	XTM	28.78	575	93	575	56	1
	1800	326T	**XT3504T-5**	10,787	XTM	30.28	700	94.5	575	57	1
	1200	365T	**XT3506T-5**	16,259	XTM	33.48	908	94.1	575	61.7	1
60	3600	364TS	**XT3602TS-5**	16,190	XTM	31.35	999	93.6	575	65.1	1
	1800	364T	**XT3604T-5**	14,997	XTM	33.48	947	95	575	70	1
	1200	404T	**XT3606T-5**	19,431	XTM	38.19	1,322	94.5	575	69.3	1
75	3600	365TS	**XT3752TS-5**	18,909	XTM	31.35	1,005	93.6	575	81.8	1
	1800	365T	**XT3754T-5**	17,759	XTM	33.48	965	95.4	575	86	1
	1200	405T	**XT3756T-5**	22,809	XTM	38.19	1,322	94.5	575	87	1
100	3600	405TS	**XT31002TS-5**	25,325	XTM	35.19	1,327	94.1	575	110	1
	1800	405T	**XT31004T-5**	24,665	XTM	38.19	1,375	95.4	575	114	1
	1200	444T	**XT31006T-5**	33,681	XTM	44.97	1,800	95	575	115	1
125	3600	444TS	**XT31252TS-5**	32,401	XTM	41.22	1,539	95	575	138	1
	1800	445T	**XT31254T-5**	31,111	XTM	44.97	1,669	95.4	575	144	1
	1200	445T	**XT31256T-5**	38,671	XTM	44.97	1,913	95	575	144	1
150	3600	445TS	**XT31502TS-5**	39,810	XTM	41.22	2,017	95	575	165	1
	1800	445T	**XT31504T-5**	36,728	XTM	44.97	1,826	95.8	575	169	1
	1200	447T	**XT31506T-5**	44,472	XTM	48.22	2,571	95.8	575	175	1
200	3600	447TS	**XT32002TS-5**	46,272	XTM	44.72	2,330	96.2	575	213	1
	1800	447T	**XT32004T-5**	44,483	XTM	48.22	2,676	96.2	575	222	1
	1200	449T	**XT32006T-5**	54,419	XTM	53.22	2,789	95.8	575	225	1
250	3600	449TS	**XT32502TS-5**	69,764	XTM	49.72	2,595	95.8	575	269	1
	1800	447T	**XT32504T-5**	56,369	XTM	53.22	2,888	96.2	575	276	1
	1200	449T	**XT32506T-5**	74,775	XTM	53.22	3,125	95.8	575	286	1
300	3600	449TS	**XT33002TS-5**	80,766	XTM	49.72	2,595	95.8	575	324	1
	1800	449T	**XT33004T-5**	66,234	XTM	53.47	3,130	96.2	575	334	1

(a) See notes on inside back flap.
Cast iron frame
Red catalog number indicates **NEW** product.

NEW!

NEW!

XT severe duty, three phase, totally enclosed, 230/460 volts, 460 and 575 volts, C-Face

1 thru 300 Hp

IP54

Features:

- Robust cast iron frame construction
- Compatible with ABB Ability™ smart sensor
- Laser etched nameplate
- Multi-color leads, for ease of connections (320T frame and below)
- Suitable for inverter use per NEMA MG1 Part 31.4.4.2
- Division 2, Class I, Groups A, B, C, D markings on nameplate
- Sealed bearings on 143T-256T frames

Applications:

- Chemical, oil & gas
- Pulp & paper, forest products
- Metals & foundries
- Cement, aggregate & above ground mining
- Food processing
- Power generation
- Water & wastewater treatment

Hp	RPM	NEMA Frame	Catalog Number	List Price	Disc. Sym.	"C" Dim.	Aprx. Wt. (lb)	Full Load Efficiency	Voltage	Full Load Amps	Notes (a)
C-Face, foot mounted											
1	3600	143TC	**CXT3012T**	1,223	XTM	12.54	53	84	208-230/460	1.4	1
	1800	143TC	**CXT3014T**	1,201	XTM	12.54	58	87.5	208-230/460	1.5	1
	1200	145TC	**CXT3016T**	1,338	XTM	12.54	56	82.5	208-230/460	1.7	1
1.5	3600	143TC	**CXT30152T**	1,296	XTM	12.54	58	85.5	208-230/460	2	1
	1800	145TC	**CXT30154T**	1,362	XTM	12.54	63	88.5	208-230/460	2.1	1
	1200	182TC	**CXT30156T**	1,565	XTM	15.98	99	87.5	208-230/460	2.5	1
2	3600	143TC	**CXT3022T**	1,358	XTM	12.54	64	86.5	208-230/460	2.5	1
	1800	145TC	**CXT3024T**	1,388	XTM	12.54	65	88.5	208-230/460	2.8	1
	1200	182TC	**CXT3026T**	1,743	XTM	15.98	113	88.5	208-230/460	3.2	1
3	3600	145TC	**CXT3032T-140 ***	1,530	XTM	12.54	64	86.5	208-230/460	3.6	1
		182TC	**CXT3032T**	1,576	XTM	15.98	99	88.5	208-230/460	3.4	1
	1800	182TC	**CXT3034T**	1,526	XTM	15.98	105	89.5	208-230/460	4.1	1
	1200	213TC	**CXT3036T**	2,069	XTM	19.20	194	90.2	208-230/460	4.5	1
5	3600	184TC	**CXT3052T**	1,782	XTM	15.98	105	90.2	208-230/460	5.7	1
	1800	184TC	**CXT3054T**	1,677	XTM	15.98	115	89.5	208-230/460	6.5	1
	1200	215TC	**CXT3056T**	2,611	XTM	19.20	203	89.5	208-230/460	8	1
7.5	3600	184TC	**CXT3072T-180 ***	2,103	XTM	15.98	123	89.5	208-230/460	8.4	1
		213TC	**CXT3072T**	2,410	XTM	19.20	171	91	208-230/460	8.6	1
	1800	213TC	**CXT3074T**	2,348	XTM	19.20	203	91.7	208-230/460	9.8	1
	1200	254TC	**CXT3076T**	3,948	XTM	23.76	302	91	230/460	10.5	1, 30
10	3600	215TC	**CXT3102T**	2,786	XTM	19.20	198	91	208-230/460	11.9	1
	1800	215TC	**CXT3104T**	2,769	XTM	19.20	231	92.4	208-230/460	12.5	1
	1200	256TC	**CXT3106T**	4,762	XTM	23.76	322	91	230/460	14.1	1, 30
15	3600	215TC	**CXT3152T-210 ***	3,415	XTM	19.20	225	91	208-230/460	16.9	1
		254TC	**CXT3152T**	3,974	XTM	23.80	253	91	230/460	17.5	1, 30
	1800	254TC	**CXT3154T**	3,979	XTM	23.80	268	92.4	230/460	17.6	1, 30
	1200	284TC	**CXT3156T**	6,766	XTM	27.76	437	91.7	230/460	21	1, 30
20	3600	256TC	**CXT3202T**	4,874	XTM	23.80	229	91	230/460	23	1, 30
	1800	256TC	**CXT3204T**	4,736	XTM	23.80	322	93	230/460	24	1, 30
	1200	286TC	**CXT3206T**	8,086	XTM	27.76	437	91.7	230/460	27	1, 30
25	3600	254TC	**CXT3252T-250 ***	5,503	XTM	23.80	299	91.7	230/460	29	1, 30
		284TSC	**CXT3252TS**	6,213	XTM	26.19	396	91.7	230/460	28	1, 30
	1800	284TC	**CXT3254T**	5,880	XTM	27.76	437	93.6	230/460	30	1, 30
	1200	324TC	**CXT3256T**	9,281	XTM	30.28	605	93	230/460	32	1, 30
30	3600	286TSC	**CXT3302TS**	7,154	XTM	26.19	444	91.7	230/460	34	1, 30
	1800	286TC	**CXT3304T**	6,933	XTM	27.76	460	93.6	230/460	38	1, 30
	1200	326TC	**CXT3306T**	10,603	XTM	30.28	630	93	230/460	39	1, 30

* Not Division 2
(a) See notes on inside back flap.
Cast iron frame
Red catalog number indicates **NEW** product.

NEW!

NEW!

XT severe duty, three phase, totally enclosed, 230/460 volts, 460 and 575 volts, C-Face

Hp	RPM	NEMA Frame	Catalog Number	List Price	Disc. Sym.	"C" Dim.	Aprx. Wt. (lb)	Full Load Efficiency	Voltage	Full Load Amps	Notes (a)
C-Face, foot mounted (continued)											
40	3600	324TSC	**CXT3402TS**	9,311	XTM	28.78	587	93	230/460	45	1, 30
	1800	324TC	**CXT3404T**	8,978	XTM	30.28	600	94.1	230/460	48	1, 30
	1200	364TC	**CXT3406T**	14,731	XTM	33.48	908	94.1	230/460	49.8	1
50	3600	326TSC	**CXT3502TS**	11,461	XTM	28.78	635	93	230/460	56	1, 30
	1800	326TC	**CXT3504T**	11,083	XTM	30.28	700	94.5	230/460	57	1, 30
	1200	365TC	**CXT3506T**	17,200	XTM	33.48	908	94.1	230/460	61.7	1
60	3600	364TSC	**CXT3602TS**	17,130	XTM	31.35	999	93.6	230/460	65.1	1
	1800	364TC	**CXT3604T**	15,937	XTM	33.48	947	95	230/460	70	1
75	3600	365TSC	**CXT3752TS**	19,849	XTM	31.35	1005	93.6	230/460	81.8	1
	1800	365TC	**CXT3754T**	18,700	XTM	33.48	965	95.4	230/460	86	1
100	3600	405TSC	**CXT31002TS**	26,502	XTM	35.20	1327	94.1	230/460	110	1
	1800	405TC	**CXT31004T-4**	25,843	XTM	38.19	1375	95.4	460	115	1
125	1800	445TC	**CXT31254T-4**	33,219	XTM	44.97	1669	95.4	460	144	1
150	1800	445TC	**CXT31504T-4**	38,215	XTM	44.97	1826	95.8	460	169	1
200	1800	447TC	**CXT32004T-4**	46,591	XTM	48.47	2676	96.2	460	222	1
250	1800	447TC	**CXT32504T-4**	58,476	XTM	53.22	2888	96.2	460	276	1
300	1800	449TC	**CXT33004T-4**	68,342	XTM	53.47	3027	96.2	460	334	1
C-Face, foot mounted, 575 volts											
1	3600	143TC	**CXT3012T-5**	1,223	XTM	12.54	53	84	575	1.4	1
	1800	143TC	**CXT3014T-5**	1,201	XTM	12.54	58	87.5	575	1.5	1
	1200	145TC	**CXT3016T-5**	1,338	XTM	12.54	56	82.5	575	1.7	1
1.5	3600	143TC	**CXT30152T-5**	1,296	XTM	12.54	58	85.5	575	2	1
	1800	145TC	**CXT30154T-5**	1,362	XTM	12.54	63	88.5	575	2.1	1
	1200	182TC	**CXT30156T-5**	1,565	XTM	15.98	99	87.5	575	2.5	1
2	3600	143TC	**CXT3022T-5**	1,358	XTM	12.54	64	86.5	575	2.5	1
	1800	145TC	**CXT3024T-5**	1,388	XTM	12.54	65	88.5	575	2.8	1
	1200	182TC	**CXT3026T-5**	1,743	XTM	15.98	113	88.5	575	3.2	1
3	3600	182TC	**CXT3032T-5**	1,576	XTM	15.98	99	88.5	575	3.4	1
	1800	182TC	**CXT3034T-5**	1,526	XTM	15.98	105	89.5	575	4.1	1
	1200	213TC	**CXT3036T-5**	2,069	XTM	19.2	194	90.2	575	4.5	1
5	3600	184TC	**CXT3052T-5**	1,782	XTM	15.98	105	90.2	575	5.7	1
	1800	184TC	**CXT3054T-5**	1,677	XTM	15.98	115	89.5	575	6.5	1
	1200	215TC	**CXT3056T-5**	2,611	XTM	19.2	203	89.5	575	8	1
7.5	3600	213TC	**CXT3072T-5**	2,410	XTM	19.2	171	91	575	8.6	1
	1800	213TC	**CXT3074T-5**	2,348	XTM	19.2	203	91.7	575	9.8	1
	1200	254TC	**CXT3076T-5**	3,948	XTM	23.76	302	91	575	10.5	1
10	3600	215TC	**CXT3102T-5**	2,786	XTM	19.2	198	91	575	11.9	1
	1800	215TC	**CXT3104T-5**	2,769	XTM	19.2	231	92.4	575	12.5	1
	1200	256TC	**CXT3106T-5**	4,762	XTM	23.76	322	91	575	14.1	1
15	3600	254TC	**CXT3152T-5**	3,974	XTM	23.8	253	91	575	17.5	1
	1800	254TC	**CXT3154T-5**	3,979	XTM	23.8	268	92.4	575	17.6	1
	1200	284TC	**CXT3156T-5**	6,766	XTM	27.76	437	91.7	575	21	1
20	3600	256TC	**CXT3202T-5**	4,874	XTM	23.8	229	91	575	23	1
	1800	256TC	**CXT3204T-5**	4,736	XTM	23.8	322	93	575	24	1
	1200	286TC	**CXT3206T-5**	8,086	XTM	27.76	437	91.7	575	27	1
25	3600	284TSC	**CXT3252TS-5**	6,213	XTM	26.19	396	91.7	575	28	1
	1800	284TC	**CXT3254T-5**	5,880	XTM	27.76	437	93.6	575	30	1
	1200	324TC	**CXT3256T-5**	9,281	XTM	30.28	605	93	575	32	1
30	3600	286TSC	**CXT3302TS-5**	7,154	XTM	26.19	444	91.7	575	34	1
	1800	286TC	**CXT3304T-5**	6,933	XTM	27.76	460	93.6	575	38	1
	1200	326TC	**CXT3306T-5**	10,603	XTM	30.28	630	93	575	39	1
40	3600	324TSC	**CXT3402TS-5**	9,311	XTM	28.78	587	93	575	45	1
	1800	324TC	**CXT3404T-5**	8,978	XTM	30.28	600	94.1	575	48	1
	1200	364TC	**CXT3406T-5**	14,731	XTM	33.48	908	94.1	575	49.8	1
50	3600	326TSC	**CXT3502TS-5**	11,461	XTM	28.78	635	93	575	56	1
	1800	326TC	**CXT3504T-5**	11,083	XTM	30.28	700	94.5	575	57	1
	1200	365TC	**CXT3506T-5**	17,200	XTM	33.48	908	94.1	575	61.7	1
60	3600	364TSC	**CXT3602TS-5**	17,130	XTM	31.35	999	93.6	575	65.1	1
	1800	364TC	**CXT3604T-5**	15,937	XTM	33.48	947	95	575	70	1
75	3600	365TSC	**CXT3752TS-5**	19,849	XTM	31.35	1005	93.6	575	81.8	1
	1800	365TC	**CXT3754T-5**	18,700	XTM	33.48	965	95.4	575	86	1

(a) See notes on inside back flap.
Cast iron frame
Red catalog number indicates **NEW** product.

NEW!

NEW!

XT severe duty, three phase, totally enclosed, 230/460 volts, 460 and 575 volts, C-Face

Hp	RPM	NEMA Frame	Catalog Number	List Price	Disc. Sym.	"C" Dim.	Aprx. Wt. (lb)	Full Load Efficiency	Voltage	Full Load Amps	Notes (a)
C-Face, foot mounted, 575 volts (continued)											
100	3600	405TSC	**CXT31002TS-5**	26,502	XTM	35.2	1327	94.1	575	110	1
	1800	405TC	**CXT31004T-5**	25,843	XTM	38.19	1375	95.4	575	115	1
125	1800	445TC	**CXT31254T-5**	33,219	XTM	44.97	1669	95.4	575	144	1
150	1800	445TC	**CXT31504T-5**	38,215	XTM	44.97	1826	95.8	575	169	1
200	1800	447TC	**CXT32004T-5**	46,590	XTM	48.47	2676	96.2	575	222	1
250	1800	447TC	**CXT32504T-5**	58,476	XTM	53.22	2888	96.2	575	276	1
300	1800	449TC	**CXT33004T-5**	68,342	XTM	53.47	3027	96.2	575	334	1
C-Face, footless											
1	3600	143TC	**VXT3012T**	1,223	XTM	12.54	53	84	208-230/460	1.4	1
	1800	143TC	**VXT3014T**	1,201	XTM	12.54	58	87.5	208-230/460	1.5	1
	1200	145TC	**VXT3016T**	1,338	XTM	12.54	56	82.5	208-230/460	1.7	1
1.5	3600	143TC	**VXT30152T**	1,296	XTM	12.54	58	85.5	208-230/460	2	1
	1800	145TC	**VXT30154T**	1,362	XTM	12.54	63	88.5	208-230/460	2.1	1
	1200	182TC	**VXT30156T**	1,565	XTM	15.98	99	87.5	208-230/460	2.5	1
2	3600	143TC	**VXT3022T**	1,358	XTM	12.54	64	86.5	208-230/460	2.5	1
	1800	145TC	**VXT3024T**	1,388	XTM	12.54	65	88.5	208-230/460	2.8	1
	1200	182TC	**VXT3026T**	1,743	XTM	15.98	115	88.5	208-230/460	3.5	1
3	3600	145TC	**VXT3032T-140 ***	1,530	XTM	12.54	64	86.5	208-230/460	3.6	1
		182TC	**VXT3032T**	1,576	XTM	15.98	99	88.5	208-230/460	3.4	1
	1800	182TC	**VXT3034T**	1,526	XTM	15.98	105	89.5	208-230/460	4.1	1
	1200	213TC	**VXT3036T**	2,082	XTM	19.25	171	90.2	208-230/460	4.5	1
5	3600	184TC	**VXT3052T**	1,782	XTM	15.98	115	90.2	208-230/460	5.7	1
	1800	184TC	**VXT3054T**	1,677	XTM	15.98	115	89.5	208-230/460	6.5	1
	1200	215TC	**VXT3056T**	2,624	XTM	19.25	203	89.5	208-230/460	8	1
7.5	3600	184TC	**VXT3072T-180 ***	2,103	XTM	15.98	123	89.5	208-230/460	8.4	1
		213TC	**VXT3072T**	2,410	XTM	19.25	171	91	208-230/460	8.6	1
	1800	213TC	**VXT3074T**	2,348	XTM	19.25	203	91.7	208-230/460	9.5	1
	1200	254TC	**VXT3076T**	3,948	XTM	23.76	302	91	230/460	10.5	1, 30
10	3600	215TC	**VXT3102T**	2,786	XTM	19.25	198	91	208-230/460	11.9	1
	1800	215TC	**VXT3104T**	2,769	XTM	19.25	231	92.4	208-230/460	12.5	1
	1200	256TC	**VXT3106T**	4,762	XTM	23.76	322	91	230/460	14.1	1, 30
15	3600	215TC	**VXT3152T-210 ***	3,415	XTM	19.25	225	91	208-230/460	16.9	1
		254TC	**VXT3152T**	3,974	XTM	23.76	239	91	230/460	17.5	1, 30
	1800	254TC	**VXT3154T**	3,979	XTM	23.76	268	92.4	230/460	17.6	1, 30
	1200	284TC	**VXT3156T**	6,766	XTM	27.76	437	91.7	230/460	21	1, 30
20	3600	256TC	**VXT3202T**	4,874	XTM	23.80	310	91	230/460	23	1, 30
	1800	256TC	**VXT3204T**	4,736	XTM	23.80	322	93	230/460	24	1, 30
	1200	286TC	**VXT3206T**	8,086	XTM	27.76	437	91.7	230/460	27	1, 30
25	3600	254TC	**VXT3252T-250 ***	5,503	XTM	23.76	299	91.7	230/460	27	1, 30
		284TSC	**VXT3252TS**	6,213	XTM	26.39	396	91.7	230/460	28	1, 30
	1800	284TC	**VXT3254T**	5,880	XTM	27.76	437	93.6	230/460	30	1, 30
	1200	324TC	**VXT3256T**	9,281	XTM	30.28	605	93	230/460	32	1, 30
30	3600	286TSC	**VXT3302TS**	7,154	XTM	26.39	396	91.7	230/460	34	1, 30
	1800	286TC	**VXT3304T**	6,933	XTM	27.76	460	93.6	230/460	36	1, 30
C-Face, footless, 575 volts											
1	3600	143TC	**VXT3012T-5**	1,223	XTM	12.54	53	84	575	1.4	1
	1800	143TC	**VXT3014T-5**	1,201	XTM	12.54	58	87.5	575	1.5	1
	1200	145TC	**VXT3016T-5**	1,338	XTM	12.54	56	82.5	575	1.7	1
1.5	3600	143TC	**VXT30152T-5**	1,296	XTM	12.54	58	85.5	575	2	1
	1800	145TC	**VXT30154T-5**	1,362	XTM	12.54	63	88.5	575	2.1	1
	1200	182TC	**VXT30156T-5**	1,565	XTM	15.98	99	87.5	575	2.5	1
2	3600	143TC	**VXT3022T-5**	1,358	XTM	12.54	64	86.5	575	2.5	1
	1800	145TC	**VXT3024T-5**	1,388	XTM	12.54	65	88.5	575	2.8	1
	1200	182TC	**VXT3026T-5**	1,743	XTM	15.98	115	88.5	575	3.5	1
3	3600	182TC	**VXT3032T-5**	1,576	XTM	15.98	99	88.5	575	3.4	1
	1800	182TC	**VXT3034T-5**	1,526	XTM	15.98	105	89.5	575	4.1	1
	1200	213TC	**VXT3036T-5**	2,082	XTM	19.25	171	90.2	575	4.5	1
5	3600	184TC	**VXT3052T-5**	1,782	XTM	15.98	115	90.2	575	5.7	1
	1800	184TC	**VXT3054T-5**	1,677	XTM	15.98	115	89.5	575	6.5	1
	1200	215TC	**VXT3056T-5**	2,624	XTM	19.25	203	89.5	575	8	1

* Not Division 2
(a) See notes on inside back flap.
Cast iron frame
Red catalog number indicates **NEW** product.

NEW!

NEW!

XT severe duty, three phase, totally enclosed, 230/460 volts, 460 and 575 volts, C-Face

Hp	RPM	NEMA Frame	Catalog Number	List Price	Disc. Sym.	"C" Dim.	Aprx. Wt. (lb)	Full Load Efficiency	Voltage	Full Load Amps	Notes (a)
C-Face, footless, 575 volts (continued)											
7.5	3600	213TC	**VXT3072T-5**	2,410	XTM	19.25	171	91	575	8.6	1
	1800	213TC	**VXT3074T-5**	2,348	XTM	19.25	203	91.7	575	9.5	1
	1200	254TC	**VXT3076T-5**	3,948	XTM	23.76	302	91	575	10.5	1
10	3600	215TC	**VXT3102T-5**	2,787	XTM	19.25	198	91	575	11.9	1
	1800	215TC	**VXT3104T-5**	2,769	XTM	19.25	231	92.4	575	12.5	1
	1200	256TC	**VXT3106T-5**	4,762	XTM	23.76	322	91	575	14.1	1
15	3600	254TC	**VXT3152T-5**	3,974	XTM	23.76	239	91	575	17.5	1
	1800	254TC	**VXT3154T-5**	3,979	XTM	23.76	268	92.4	575	17.6	1
	1200	284TC	**VXT3156T-5**	6,766	XTM	27.76	437	91.7	575	21	1
20	3600	256TC	**VXT3202T-5**	4,874	XTM	23.8	310	91	575	23	1
	1800	256TC	**VXT3204T-5**	4,736	XTM	23.8	322	93	575	24	1
	1200	286TC	**VXT3206T-5**	8,086	XTM	27.76	437	91.7	575	27	1
25	3600	284TSC	**VXT3252TS-5**	6,213	XTM	26.39	396	91.7	575	28	1
	1800	284TC	**VXT3254T-5**	5,880	XTM	27.76	437	93.6	575	30	1
	1200	324TC	**VXT3256T-5**	9,281	XTM	30.28	605	93	575	32	1
30	3600	286TSC	**VXT3302TS-5**	7,154	XTM	26.39	396	91.7	575	34	1
	1800	286TC	**VXT3304T-5**	6,933	XTM	27.76	460	93.6	575	36	1

(a) See notes on inside back flap.
Cast iron frame
Red catalog number indicates **NEW** product.

NEW!

XEX severe duty, three phase, totally enclosed, 230/460 volts, 460 and 575 volts, foot mounted

1 thru 900 Hp

IP55 IP66

Features:

- Robust cast iron construction
- Regreasable bearings all frames
- IP55 on 143T-L449T frames, IP66 on 5000 frames
- 304 stainless steel nameplates
- Inverter ready nameplate
- Division 2, Class I, Groups A, B, C, D markings on nameplate
- Division 2, Class II, Groups F & G, T4 on 5000 frames
- Insulated NDE bearing on 5000 frames

Applications:

- Chemical, oil & gas
- Pulp & paper, forest products
- Metals & foundries
- Cement, aggregate & above ground mining
- Food processing
- Power generation
- Water & wastewater treatment

Hp	RPM	NEMA Frame	Catalog Number	List Price	Disc. Sym.	"C" Dim.	Aprx. Wt. (lb)	Full Load Efficiency	Voltage	Full Load Amps	Notes (a)
230/460 volts & 460 volts											
1	3600	143T	**ECP3580T**	1,493	SDM	12.95	59	84	230/460	1.4	1
		143T	**ECP3580T-4**	1,493	SDM	12.95	59	84	460	1.4	1
	1800	143T	**ECP3581T**	1,641	SDM	12.88	64	87.5	230/460	1.5	1, 30
		143T	**ECP3581T-4**	1,641	SDM	12.88	61	87.5	460	1.5	1
		143T	**ENCP3581T-4**	1,709	SDM	11.36	56	87.5	460	1.5	1, 60
	1200	145T	**ECP3582T**	1,812	SDM	12.88	68	82.5	230/460	1.7	1, 30
		145T	**ECP3582T-4**	1,812	SDM	12.88	69	82.5	460	1.7	1
	900	182T	**ECP3687T-4**	2,545	SDM	15.93	103	78.5	460	2	1
1 1/2	3600	143T	**ECP3583T**	1,698	SDM	12.95	67	85.5	230/460	2	1, 30
		143T	**ECP3583T-4**	1,698	SDM	12.95	67	85.5	460	2	1
	1800	145T	**ECP3584T**	1,671	SDM	12.88	69	88.5	230/460	2.1	1, 30
		145T	**ECP3584T-4**	1,671	SDM	12.88	72	88.5	460	2.1	1
	1200	182T	**ECP3667T**	2,120	SDM	15.93	108	87.5	230/460	2.5	1, 30
		182T	**ECP3667T-4**	2,120	SDM	15.93	108	87.5	460	2.5	1
	900	184T	**ECP3668T-4**	3,167	SDM	15.93	110	80	460	3.2	1
2	3600	145T	**ECP3586T**	1,776	SDM	12.95	74	86.5	230/460	2.5	1, 30
		145T	**ECP3586T-4**	1,776	SDM	12.95	74	86.5	460	2.5	1
	1800	145T	**ECP3587T**	1,745	SDM	12.88	75	88.5	230/460	2.8	1, 30
		145T	**ECP3587T-4**	1,745	SDM	12.88	73	88.5	460	2.8	1
	1200	184T	**ECP3664T**	2,147	SDM	15.93	122	88.5	230/460	3.2	1
		184T	**ECP3664T-4**	2,147	SDM	15.93	120	88.5	460	3.2	1
	900	213T	**ECP3772T-4**	3,994	SDM	19.50	179	85.5	460	3.8	1
3	3600	182T	**ECP3660T**	2,100	SDM	15.93	104	88.5	230/460	3.4	1, 30
		182T	**ECP3660T-4**	2,100	SDM	15.93	106	88.5	460	3.4	1
	1800	182T	**ECP3661T**	2,207	SDM	15.93	110	89.5	230/460	4.1	1, 30
		182T	**ECP3661T-4**	2,207	SDM	15.93	112	89.5	460	4.1	1
	1200	213T	**ECP3764T**	3,098	SDM	19.50	185	90.2	230/460	4.5	1, 30
		213T	**ECP3764T-4**	3,098	SDM	19.50	209	89.5	460	4.5	1
	900	215T	**ECP3775T-4**	4,330	SDM	19.50	203	85.5	460	5.2	1
5	3600	184T	**ECP3663T**	2,584	SDM	15.93	114	90.2	230/460	5.7	1, 30
		184T	**ECP3663T-4**	2,584	SDM	15.93	111	89.5	460	5.7	1
	1800	184T	**ECP3665T**	2,246	SDM	15.93	118	89.5	230/460	6.5	1, 30
		184T	**ECP3665T-4**	2,246	SDM	15.93	119	89.5	460	6.6	1
	1200	215T	**ECP3768T**	3,140	SDM	19.50	212	90.2	230/460	7.3	1, 30
		215T	**ECP3768T-4**	3,140	SDM	19.50	227	90.2	460	7.3	1
	900	254T	**ECP2280T-4**	6,892	SDM	24.78	327	87.5	460	8.6	1
7 1/2	3600	213T	**ECP3769T**	3,372	SDM	19.50	169	91	230/460	8.6	1
		213T	**ECP3769T-4**	3,372	SDM	19.50	173	91.7	460	8.6	1
	1800	213T	**ECP3770T**	2,828	SDM	19.50	170	91.7	230/460	9.5	1
		213T	**ECP3770T-4**	2,828	SDM	19.50	170	91.7	460	9.5	1
	1200	254T	**ECP2276T**	4,492	SDM	24.78	335	91	230/460	10.7	1, 30
		254T	**ECP2276T-4**	4,492	SDM	24.78	337	91	460	10.7	1
	900	256T	**ECP2401T-4**	7,881	SDM	24.78	347	86.5	460	12.1	1

(a) See notes on inside back flap. Cast iron frame

XEX severe duty, three phase, totally enclosed, 230/460 volts, 460 and 575 volts, foot mounted

Hp	RPM	NEMA Frame	Catalog Number	List Price	Disc. Sym.	"C" Dim.	Aprx. Wt. (lb)	Full Load Efficiency	Voltage	Full Load Amps	Notes (a)
230/460 volts & 460 volts (continued)											
10	3600	215T	**ECP3771T**	3,590	SDM	19.50	203	92.4	230/460	11	1
		215T	**ECP3771T-4**	3,590	SDM	19.50	215	92.4	460	11	1
	1800	215T	**ECP3774T**	3,386	SDM	19.50	231	92.4	230/460	12.5	1
		215T	**ECP3774T-4**	3,386	SDM	19.50	211	92.4	460	12.5	1
	1200	256T	**ECP2332T**	5,836	SDM	24.78	348	91	230/460	14.2	1, 30
		256T	**ECP2332T-4**	5,836	SDM	24.78	347	91	460	14.2	1
	900	284T	**ECP2402T-4**	9,194	SDM	27.93	468	89.5	460	14.6	1
15	3600	254T	**ECP2294T**	4,593	SDM	24.78	300	91.7	230/460	17.2	1, 30
		254T	**ECP2394T-4**	4,593	SDM	24.78	297	91.7	460	17.2	1
	1800	254T	**ECP2333T**	4,315	SDM	24.78	314	92.4	230/460	18.1	1, 30
		254T	**ECP2333T-4**	4,315	SDM	24.78	294	92.4	460	18.1	1
	1200	284T	**ECP4100T**	6,691	SDM	27.93	449	91.7	230/460	21	1, 30
		284T	**ECP4100T-4**	6,691	SDM	27.93	448	91.7	460	21	1
	900	286T	**ECP2395T-4**	12,271	SDM	27.93	479	89.5	460	23	1
20	3600	256T	**ECP4106T**	5,357	SDM	24.78	324	91.7	230/460	22	1, 30
		256T	**ECP4106T-4**	5,357	SDM	24.78	328	91.7	460	22	1
	1800	256T	**ECP2334T**	4,627	SDM	24.78	334	93	230/460	24	1, 30
		256T	**ECP2334T-4**	4,627	SDM	24.78	333	93	460	24	1
	1200	286T	**ECP4102T**	9,091	SDM	27.93	437	91.7	230/460	27	1
		286T	**ECP4102T-4**	9,091	SDM	27.93	437	91.7	460	27	1
	900	324T	**ECP4112T-4**	13,989	SDM	30.66	600	90.2	460	30	1
25	3600	284TS	**ECP4107T**	6,438	SDM	26.62	396	91.7	230/460	28	1, 30
		284TS	**ECP4107T-4**	6,438	SDM	26.62	410	91.7	460	28	1
	1800	284T	**ECP4103T**	6,055	SDM	27.93	431	93.6	230/460	30	1, 30
		284T	**ECP4103T-4**	6,055	SDM	27.93	435	93.6	460	30	1
	1200	324T	**ECP4111T**	9,500	SDM	30.28	604	93	230/460	32	1, 30
		324T	**ECP4111T-4**	9,500	SDM	30.28	608	93	460	32	1
	900	326T	**ECP4124T-4**	17,469	SDM	30.66	598	90.2	460	37	1
30	3600	286TS	**ECP4108T**	7,848	SDM	26.62	440	91.7	230/460	34	1
		286TS	**ECP4108T-4**	7,848	SDM	26.62	424	91.7	460	34	1
	1800	286T	**ECP4104T**	7,189	SDM	27.93	475	93.6	230/460	38	1, 30
		286T	**ECP4104T-4**	7,189	SDM	27.93	470	93.6	460	38	1
	1200	326T	**ECP4117T**	12,246	SDM	30.28	621	93	230/460	39	1, 30
		326T	**ECP4117T-4**	12,246	SDM	30.28	633	93	460	39	1
	900	364T	**ECP4113T-4**	18,472	SDM	33.44	813	92.4	460	39.3	1
40	3600	324TS	**ECP4109T**	10,781	SDM	29.15	552	93	230/460	45	1
		324TS	**ECP4109T-4**	10,781	SDM	29.15	566	93	460	46	1
	1800	324T	**ECP4110T**	9,406	SDM	30.28	618	94.1	230/460	48	1, 30
		324T	**ECP4110T-4**	9,406	SDM	30.28	626	94.1	460	48	1
	1200	364T	**ECP4308T**	14,967	SDM	33.49	918	94.1	230/460	49.4	1
		364T	**ECP4308T-4**	14,967	SDM	33.49	889	94.1	460	49.4	1
	900	365T	**ECP4315T-4**	21,240	SDM	33.44	813	93	460	52	1
50	3600	326TS	**ECP4114T**	11,298	SDM	29.15	619	93	230/460	56	1, 30
		326TS	**ECP4114T-4**	11,298	SDM	29.15	610	93	460	56	1
	1800	326T	**ECP4115T**	11,040	SDM	30.28	641	94.5	230/460	58	1, 30
		326T	**ECP4115T-4**	11,040	SDM	30.28	668	94.5	460	58	1
	1200	365T	**ECP4312T**	17,722	SDM	33.49	928	94.1	230/460	61.7	1
		365T	**ECP4312T-4**	17,722	SDM	33.49	920	94.1	460	61.7	1
	900	405T	**ECP4417T-4**	26,174	SDM	38.20	1216	93	460	63	1
60	3600	364TS	**ECP4310T**	15,938	SDM	31.37	929	95	230/460	65.1	1
		364TS	**ECP4310T-4**	15,938	SDM	31.37	882	95	460	65.1	1
	1800	364T	**ECP4314T**	15,761	SDM	33.49	933	95	230/460	68	1
		364T	**ECP4314T-4**	15,761	SDM	33.49	941	95	460	68	1
	1200	404T	**ECP4403T**	22,207	SDM	38.20	1281	95	230/460	69	1
		404T	**ECP4403T-4**	22,207	SDM	38.20	1331	95	460	69	1
		404T	**ECP4403TR-4**	23,329	SDM	38.20	1375	94.5	460	67.3	1, 5
	900	405T	**ECP4418T-4**	30,696	SDM	38.20	1216	93	460	76	1
75	3600	365TS	**ECP4313T**	18,257	SDM	31.37	1004	93.6	230/460	80.7	1
		365TS	**ECP4313T-4**	18,257	SDM	31.37	990	93.6	460	80.7	1
	1800	365T	**ECP4316T**	18,134	SDM	33.49	958	95.4	230/460	85.9	1
		365T	**ECP4316T-4**	18,134	SDM	33.49	962	95.4	460	84.9	1
		365T	**ECP4316TR-4**	19,116	SDM	33.44	965	95.4	460	85.9	1, 5
	1200	405T	**ECP4404T**	27,026	SDM	38.20	1275	94.5	230/460	86.9	1
		405T	**ECP4404T-4**	27,026	SDM	38.20	1334	94.5	460	86.9	1
		405T	**ECP4404TR-4**	28,148	SDM	38.20	1334	94.5	460	86.9	1, 5
	900	444T	**ECP4419T-4**	37,898	SDM	44.75	1815	94.5	460	89.3	1

(a) See notes on inside back flap. Cast iron frame

NEW!

XEX severe duty, three phase, totally enclosed, 230/460 volts, 460 and 575 volts, foot mounted

Hp	RPM	NEMA Frame	Catalog Number	List Price	Disc. Sym.	"C" Dim.	Aprx. Wt. (lb)	Full Load Efficiency	Voltage	Full Load Amps	Notes (a)
230/460 volts & 460 volts (continued)											
100	3600	405TS	**ECP4402T**	23,038	SDM	35.04	1283	94.1	230/460	110	1
		405TS	**ECP4402T-4**	23,038	SDM	35.04	1272	94.1	460	110	1
	1800	405T	**ECP4400T-4**	22,695	SDM	38.20	1296	95.4	460	112	1
		405T	**ECP4400TR-4**	23,818	SDM	38.20	1326	95.4	460	112	1, 5
		405TS	**ECP4400TS-4**	22,695	SDM	35.04	1304	95.4	460	112	1
	1200	444T	**ECP4409T-4**	29,726	SDM	44.75	1871	95	460	119	1
		444T	**ECP4409TR-4**	31,656	SDM	44.75	1871	95	460	119	1, 5
	900	445T	**ECP4420T-4**	44,236	SDM	44.75	1905	93.6	460	125	1
125	3600	444TS	**ECP4412T**	27,071	SDM	41.08	1957	95	230/460	138	1
		444TS	**ECP4412T-4**	27,071	SDM	41.08	1901	95	460	137	1
	1800	444T	**ECP4410T-4**	26,831	SDM	44.75	1950	95.4	460	144	1
		444T	**ECP4410TR-4**	28,761	SDM	44.75	1950	95.4	460	144	1, 5
	1200	445T	**ECP4411T-4**	33,582	SDM	44.75	2146	95	460	146	1
		445T	**ECP4411TR-4**	35,512	SDM	44.75	2146	95	460	146	1, 5
	900	447T	**ECP4421T-4**	48,448	SDM	48.24	2330	95	460	149	1
150	3600	445TS	**ECP4413T-4**	31,737	SDM	40.83	2017	95	460	164	1
	1800	445T	**ECP4406T-4**	31,432	SDM	44.75	2190	95.8	460	169	1
		445T	**ECP4406TR-4**	33,362	SDM	44.75	2190	95.8	460	169	1, 5
	1200	447T	**ECP44156T-4**	37,862	SDM	48.24	2546	95.8	460	170	1
		447T	**ECP44156TR-4**	39,791	SDM	48.24	2585	95.8	460	170	1, 5
	900	449T	**ECP4422T-4**	55,666	SDM	53.24	3051	95	460	188	1
200	3600	447TS	**ECP4416T-4**	37,579	SDM	44.48	2436	96.2	460	213	1
	1800	447T	**ECP4407T-4**	37,812	SDM	48.24	2545	96.2	460	222	1
		447T	**ECP4407TR-4**	39,739	SDM	48.24	2621	96.2	460	222	1, 5
		447TS	**ECP4407TS-4**	37,812	SDM	44.48	2573	96.2	460	222	1
	1200	449T	**ECP44206T-4**	49,596	SDM	53.24	3104	95.8	460	225	1
		449T	**ECP44206TR-4**	51,523	SDM	53.24	3091	95.8	460	225	1, 5
	900	449T	**ECP4423T-4**	70,655	SDM	53.24	3179	95	460	248	1
250	3600	449TS	**ECP44252T-4**	57,466	SDM	49.48	2633	95.8	460	269	1
	1800	449T	**ECP4408T-4**	47,983	SDM	53.24	2981	96.2	460	276	1
		449T	**ECP4408TR-4**	49,910	SDM	53.24	2995	96.2	460	276	1, 5
	1200	449T	**ECP44256T-4**	69,188	SDM	53.24	3090	96.2	460	283	1
		449T	**ECP44256TR-4**	71,115	SDM	53.24	3093	95.8	460	287	1, 5
		5008L	**ECP502506-PP**	52,434	ISD	60.17	3682	95.8	460	296	
	900	L449T	**ECP49258T-4**	85,552	SDM	60.13	3430	95	460	288	1, 99
300	3600	449TS	**ECP44302T-4**	83,987	SDM	49.48	2789	96.2	460	318	1
		5008S	**ECP503002-PP**	51,123	ISD	60.17	3791	95.8	460	327	
	1800	449T	**ECP44304T-4**	66,134	SDM	53.24	3061	96.2	460	334	1
		449T	**ECP44304TR-4**	68,063	SDM	53.24	3048	96.2	460	334	1, 5
		5008S	**ECP503004-PP**	48,412	ISD	60.17	3902	96.2	460	330	
	1200	L449T	**ECP49306T-4**	100,809	SDM	60.13	3125	95.8	460	340	1, 99
		5010L	**ECP503006-PP**	61,525	ISD	67.05	4277	95.8	460	356	
	900	L449T	**ECP49308T-4**	91,261	SDM	60.13	4089	95	460	378	14, 99
		5010L	**ECP503008-PP**	72,641	ISD	67.05	4564	95	460	369	
350	3600	449TS	**ECP44352T-4**	87,854	SDM	49.48	2965	95.8	460	370	1
		5008S	**ECP503502-PP**	56,605	ISD	60.17	4012	95.8	460	380	
	1800	L449T	**ECP49354T-4**	102,998	SDM	60.21	3543	96.2	460	384	1, 99
		5008L	**ECP503504-PP**	53,604	ISD	60.17	3902	96.2	460	397	
	1200	5010L	**ECP503506-PP**	66,656	ISD	67.05	4607	95.8	460	416	
	900	5012L	**ECP503508-PP**	80,076	ISD	74.00	5291	95.0	460	437	
400	3600	L449TS	**ECP44402T-4**	117,940	SDM	56.72	3700	96.2	460	420	1
		5010S	**ECP504002-PP**	62,199	ISD	67.05	4431	95.8	460	439	
	1800	L449T	**ECP49404T-4**	106,057	SDM	60.34	3682	96.2	460	435	1, 99
		5008L	**ECP504004-PP**	58,901	ISD	60.17	4299	96.2	460	462	
	1200	5012L	**ECP504006-PP**	73,399	ISD	74.00	5005	95.8	460	476	
	900	5012L	**ECP504008-PP**	85,950	ISD	74.00	5667	95	460	480	
450	3600	5010S	**ECP504502-PP**	68,711	ISD	67.05	4431	95.8	460	490	
	1800	L449T	**ECP49454T-4**	109,031	SDM	60.34	3720	96.2	460	460	1, 99
		5010L	**ECP504504-PP**	65,068	ISD	67.05	4564	96.2	460	511	
	1200	5012L	**ECP504506-PP**	77,821	ISD	74.00	5445	95.8	460	534	
	900	5012L	**ECP504508-PP**	89,115	ISD	74.00	5886	95	460	560	
500	3600	5010S	**ECP505002-PP**	75,156	ISD	67.05	4431	95.8	460	542	
	1800	5010L	**ECP505004-PP**	72,615	ISD	67.05	4564	96.2	460	561	
	1200	5012L	**ECP505006-PP**	80,796	ISD	74.00	5754	95.8	460	606	
	900	5012L	**ECP505008-PP**	94,612	ISD	74.00	5886	95	460	610	

(a) See notes on inside back flap. Cast iron frame **Red** catalog number indicates **NEW** product.

NEW!

XEX severe duty, three phase, totally enclosed, 230/460 volts, 460 and 575 volts, foot mounted

Hp	RPM	NEMA Frame	Catalog Number	List Price	Disc. Sym.	"C" Dim.	Aprx. Wt. (lb)	Full Load Efficiency	Voltage	Full Load Amps	Notes (a)
230/460 volts & 460 volts (continued)											
600	3600	5010S	**ECP506002-PP**	80,316	ISD	67.05	4652	95.8	460	660	
	1800	5012L	**ECP506004-PP**	76,057	ISD	74.00	5225	96.2	460	676	
	1200	5012L	**ECP506006-PP**	85,320	ISD	74.00	5887	95.8	460	720	
650	3600	5010S	**ECP506502-PP**	89,551	ISD	67.05	4785	95.8	460	696	
	1800	5012L	**ECP506504-PP**	82,445	ISD	74.00	5203	96.2	460	731	
	1200	5012L	**ECP506506-PP**	90,097	ISD	74.00	5887	95.8	460	769	
700	1800	5012L	**ECP507004-PP**	87,556	ISD	74.00	5688	96.2	460	765	
	1200	5012L	**ECP507006-PP**	95,053	ISD	74.00	5887	95.8	460	824	
750	1800	5012L	**ECP507504-PP**	92,459	ISD	74.00	5688	96.2	460	831	
800	1800	5012L	**ECP508004-PP**	96,342	ISD	74.00	5931	96.2	460	925	
900	1800	5012L	**ECP509004-PP**	100,195	ISD	74.00	6283	96.2	460	1020	
575 Volt											
1	3600	143T	**ECP3580T-5**	1,493	SDM	12.88	61	84	575	1.1	1
	1800	143T	**ECP3581T-5**	1,641	SDM	12.88	65	87.5	575	1.2	1
1 1/2	1800	145T	**ECP3584T-5**	1,671	SDM	12.88	71	88.5	575	1.7	1
2	1800	145T	**ECP3587T-5**	1,745	SDM	12.88	75	86.5	575	2.3	1
3	3600	182T	**ECP3660T-5**	2,100	SDM	15.93	107	88.5	575	2.7	1
	1800	182T	**ECP3661T-5**	2,207	SDM	15.93	113	89.5	575	3.3	1
	1200	213T	**ECP3764T-5**	3,098	SDM	19.50	211	90.2	575	3.6	1
5	3600	184T	**ECP3663T-5**	2,584	SDM	15.93	111	89.5	575	4.6	1
	1800	184T	**ECP3665T-5**	2,246	SDM	15.93	118	89.5	575	5.3	1
	1200	215T	**ECP3768T-5**	3,140	SDM	19.50	196	90.2	575	5.8	1
7 1/2	3600	213T	**ECP3769T-5**	3,372	SDM	19.50	169	91.7	575	6.9	1
	1800	213T	**ECP3770T-5**	2,828	SDM	19.50	170	91.7	575	7.5	1
	1200	254T	**ECP2276T-5**	4,492	SDM	24.78	333	91.7	575	8.7	1
10	3600	215T	**ECP3771T-5**	3,590	SDM	19.50	182	92.4	575	8.9	1
	1800	215T	**ECP3774T-5**	3,386	SDM	19.50	231	92.4	575	10	1
	1200	256T	**ECP2332T-5**	5,836	SDM	24.78	347	91	575	11.5	1
15	3600	254T	**ECP2394T-5**	4,593	SDM	24.78	239	91.7	575	13.8	1
	1800	254T	**ECP2333T-5**	4,315	SDM	24.78	297	92.4	575	14.6	1
	1200	284T	**ECP4100T-5**	6,691	SDM	27.93	446	93	575	15.9	1
20	3600	256T	**ECP4106T-5**	5,357	SDM	24.78	310	91.7	575	17.9	1
	1800	256T	**ECP2334T-5**	4,627	SDM	24.78	325	93	575	19.2	1
	1200	286T	**ECP4102T-5**	9,091	SDM	27.93	478	93	575	20.6	1
25	1800	284T	**ECP4103T-5**	6,055	SDM	27.93	424	93.6	575	24	1
	1200	324T	**ECP4111T-5**	9,500	SDM	30.28	612	93	575	25.7	1
30	1800	286T	**ECP4104T-5**	7,189	SDM	27.93	467	93.6	575	29	1
	1200	326T	**ECP4117T-5**	12,246	SDM	30.28	630	93	575	30	1
40	1800	324T	**ECP4110T-5**	9,406	SDM	30.28	623	94.1	575	37	1
	1200	364T	**ECP4308T-5**	15,262	SDM	33.49	910	94.1	575	40	1
50	1800	326T	**ECP4115T-5**	11,040	SDM	30.28	652	94.5	575	45	1
60	1800	364T	**ECP4314T-5**	15,761	SDM	33.49	936	95	575	54.4	1
75	3600	365TS	**ECP4313T-5**	18,257	SDM	31.35	1005	93.6	575	66	1
	1800	365T	**ECP4316T-5**	18,134	SDM	33.49	966	95.4	575	68.7	1
	1200	405T	**ECP4404T-5**	27,026	SDM	38.19	1322	94.5	575	70	1
100	1800	405T	**ECP4400T-5**	22,695	SDM	38.04	1305	95.4	575	89.6	1
125	1800	444T	**ECP4410T-5**	26,831	SDM	44.75	2054	95.4	575	115	1
	1200	445T	**ECP4411T-5**	33,582	SDM	44.97	1913	95	575	116	1
150	1800	445T	**ECP4406T-5**	31,432	SDM	44.75	2175	95.8	575	135	1
200	1800	447T	**ECP4407T-5**	37,812	SDM	48.24	2570	96.2	575	178	1
250	1800	449T	**ECP4408T-5**	47,983	SDM	53.47	3027	96.2	575	219	1
300	1800	449T	**ECP44304T-5**	66,134	SDM	53.47	3150	96.2	575	267	1
350	1800	L449T	**ECP49354T-5**	102,998	SDM	60.47	3680	96.2	575	309	1
400	1800	L449T	**ECP49404T-5**	106,057	SDM	60.47	3702	96.2	575	356	1

(a) See notes on inside back flap.
Cast iron frame
Red catalog number indicates **NEW** product.

NEW!

XEX severe duty, three phase, totally enclosed, 230/460 volts, 460 and 575 volts, C-Face

1 thru 200 Hp

IP55

Features:

- Robust cast iron construction
- Regreasable bearings all frames
- 304 stainless steel nameplates
- Inverter ready nameplate
- Division 2, Class I, Groups A, B, C, D markings on nameplate
- Locked bearing to allow mounting in any configuration

Applications:

- Chemical, oil & gas
- Pulp & paper, forest products
- Metals & foundries
- Cement, aggregate & above ground mining
- Food processing
- Power generation
- Water & wastewater treatment

Hp	RPM	NEMA Frame	Catalog Number	List Price	Disc. Sym.	"C" Dim.	Aprx. Wt. (lb)	Full Load Efficiency	Voltage	Full Load Amps	Notes (a)
C-Face, Foot Mounted											
1	1800	143TC	**CECP3581T**	1,727	SDM	13.38	67	87.5	230/460	1.5	1
		143TC	**CECP3581T-5**	1,727	SDM	13.38	60	85.5	575	1.2	1
	1200	145TC	**CECP3582T**	1,903	SDM	13.38	75	82.5	230/460	1.7	1
1 1/2	1800	145TC	**CECP3584T**	1,762	SDM	13.38	72	88.5	230/460	2.1	1
		145TC	**CECP3584T-5**	1,762	SDM	13.38	72	88.5	575	1.7	1
	1200	182TC	**CECP3667T**	2,212	SDM	16.68	99	87.5	230/460	2.5	1
2	1800	145TC	**CECP3587T**	1,833	SDM	13.38	76	88.5	230/460	2.8	1
		145TC	**CECP3587T-5**	1,833	SDM	13.38	76	88.5	575	2.3	1
	1200	184TC	**CECP3664T**	2,235	SDM	16.68	113	88.5	230/460	3.2	1
3	3600	182TC	**CECP3660T**	2,257	SDM	16.68	112	88.5	230/460	3.4	1, 30
	1800	182TC	**CECP3661T**	2,366	SDM	16.68	114	89.5	230/460	4.1	1
		182TC	**CECP3661T-5**	2,366	SDM	16.68	114	89.5	575	3.2	1
	1200	213TC	**CECP3764T**	3,257	SDM	20.24	187	90.2	230/460	4.5	1, 30
5	3600	184TC	**CECP3663T**	2,741	SDM	16.68	121	90.2	230/460	5.7	1, 30
	1800	184TC	**CECP3665T**	2,403	SDM	16.68	130	89.5	230/460	6.5	1
		184TC	**CECP3665T-5**	2,403	SDM	16.68	130	90.2	575	5.2	1
	1200	215TC	**CECP3768T**	3,298	SDM	20.24	226	90.2	230/460	7.3	1, 30
7 1/2	3600	213TC	**CECP3769T**	3,686	SDM	20.24	173	89.5	230/460	8.6	1
	1800	213TC	**CECP3770T**	3,144	SDM	20.24	170	91.7	230/460	9.5	1
		213TC	**CECP3770T-5**	3,144	SDM	20.24	170	91.7	575	7.5	1
	1200	254TC	**CECP2276T**	4,808	SDM	25.28	305	91	230/460	10.7	1, 30
10	3600	215TC	**CECP3771T**	3,901	SDM	20.24	203	92.4	230/460	11	1, 30
	1800	215TC	**CECP3774T**	3,700	SDM	20.24	231	92.4	230/460	12.5	1
		215TC	**CECP3774T-5**	3,700	SDM	20.24	231	91.7	575	9.8	1
	1200	256TC	**CECP2332T**	6,151	SDM	25.28	323	91	230/460	14.2	1, 30
15	3600	254TC	**CECP2294T**	5,509	SDM	25.28	307	91.7	230/460	17.2	1, 30
	1800	254TC	**CECP2333T**	5,256	SDM	25.28	297	92.4	230/460	18.1	1, 30
		254TC	**CECP2333T-4**	5,256	SDM	25.28	296	92.4	460	18.1	1
		254TC	**CECP2333T-5**	5,256	SDM	25.28	296	92.4	575	14.6	1
	1200	284TC	**CECP4100T**	7,633	SDM	27.93	435	91.7	230/460	21	1, 30
20	3600	256TC	**CECP4106T**	6,273	SDM	25.28	333	91	230/460	22	1, 30
	1800	256TC	**CECP2334T**	5,571	SDM	25.28	339	93	230/460	24	1, 30
		256TC	**CECP2334T-4**	5,571	SDM	25.28	336	93	460	24	1
		256TC	**CECP2334T-5**	5,571	SDM	25.28	336	93	575	19.2	1
	1200	286TC	**CECP4102T**	10,034	SDM	27.93	460	91.7	230/460	26	1
25	3600	284TSC	**CECP4107T**	7,652	SDM	26.56	396	91.7	230/460	28	1, 30
	1800	284TC	**CECP4103T-4**	7,362	SDM	27.93	440	93.6	460	30	1
		286TC	**CECP4103T**	7,362	SDM	27.93	449	93.6	230/460	30	1, 30
		286TC	**CECP4103T-5**	7,362	SDM	27.93	449	93.6	575	24	1
	1200	324TC	**CECP4111T**	10,808	SDM	30.28	626	93	230/460	32	1, 30
30	3600	286TSC	**CECP4108T**	9,063	SDM	26.56	454	91.7	230/460	34	1
	1800	286TC	**CECP4104T**	8,497	SDM	27.93	478	93.6	230/460	36	1, 30
		286TC	**CECP4104T-4**	8,497	SDM	27.93	475	93.6	460	36	1
		286TC	**CECP4104T-5**	8,497	SDM	27.93	475	93.6	575	28	1
	1200	326TC	**CECP4117T**	13,554	SDM	30.28	640	93	230/460	39	1, 30

(a) See notes on inside back flap. Cast iron frame **Red** catalog number indicates **NEW** product.

XEX severe duty, three phase, totally enclosed, 230/460 volts, 460 and 575 volts, C-Face

Hp	RPM	NEMA Frame	Catalog Number	List Price	Disc. Sym.	"C" Dim.	Aprx. Wt. (lb)	Full Load Efficiency	Voltage	Full Load Amps	Notes (a)
C-Face, Foot Mounted (continued)											
40	3600	324TSC	**CECP4109T**	12,183	SDM	28.78	571	92.4	230/460	45	1
	1800	324TC	**CECP4110T**	10,847	SDM	30.28	628	94.1	230/460	48	1, 30
	1200	364TC	**CECP4308T**	16,493	SDM	33.44	908	94.1	230/460	49.4	1
50	3600	326TSC	**CECP4114T**	12,699	SDM	28.78	639	93	230/460	56	1, 30
	1800	326TC	**CECP4115T**	12,482	SDM	30.28	656	94.5	230/460	58	1, 30
	1200	365TC	**CECP4312T**	19,248	SDM	33.44	908	94.1	230/460	61.7	1
60	3600	364TSC	**CECP4310T**	17,464	SDM	31.31	874	95	230/460	65.1	1
	1800	364TC	**CECP4314T**	17,287	SDM	33.44	880	95	230/460	68	1
		364TC	**CECP4314T-4**	16,631	SDM	33.48	961	95	460	70	1
		364TC	**CECP4314T-5**	16,631	SDM	33.48	961	95	575	55	1
75	3600	365TSC	**CECP4313T**	19,783	SDM	31.31	899	94.5	230/460	80.7	1
	1800	365TC	**CECP4316T**	19,660	SDM	33.44	905	95.4	230/460	85.9	1
100	3600	405TSC	**CECP4402T-4**	24,946	SDM	35.31	1327	95	460	110	1
	1800	405TC	**CECP4400T-4**	25,036	SDM	38.20	1388	95.4	460	112	1
125	1800	444TC	**CECP4410T-4**	30,072	SDM	44.75	2002	95.4	460	144	1
150	1800	445TC	**CECP4406T-4**	34,673	SDM	44.75	2138	95.8	460	169	1
200	1800	447TC	**CECP4407T-4**	41,710	SDM	48.24	2455	96.2	460	222	1
C-Face, Footless											
1	3600	56C	**VECP3580-4**	1,573	SDM	14.50	60	84	460	1.4	1
	1800	56C	**VECP3581**	1,720	SDM	14.50	66	87.5	230/460	1.5	1
		56C	**VECP3581-4**	1,720	SDM	14.50	66	87.5	460	1.5	1
		143TC	**VECP3581T**	1,720	SDM	14.57	67	87.5	230/460	1.5	1
		143TC	**VECP3581T-4**	1,720	SDM	14.57	66	87.5	460	1.5	1
	1200	145TC	**VECP3582T**	1,894	SDM	14.57	69	82.5	230/460	1.7	1
1 1/2	3600	143TC	**VECP3583T-4**	1,775	SDM	14.57	67	85.5	460	2	1
	1800	145TC	**VECP3584T**	1,748	SDM	14.57	71	88.5	230/460	2.1	1
		145TC	**VECP3584T-4**	1,748	SDM	14.57	70	88.5	460	2.1	1
	1200	182TC	**VECP3667T**	2,249	SDM	16.98	103	87.5	230/460	2.5	1
2	3600	145TC	**VECP3586T-4**	1,858	SDM	14.57	74	86.5	460	2.5	1
	1800	145TC	**VECP3587T**	1,820	SDM	14.57	75	88.5	230/460	2.8	1
		145TC	**VECP3587T-4**	1,820	SDM	14.57	75	88.5	460	2.8	1
	1200	184TC	**VECP3664T**	2,281	SDM	16.98	114	88.5	230/460	3.2	1
3	3600	182TC	**VECP3660T-4**	2,230	SDM	16.98	103	88.5	460	3.4	1
	1800	182TC	**VECP3661T**	2,337	SDM	16.98	112	89.5	230/460	4.1	1
		182TC	**VECP3661T-4**	2,337	SDM	16.98	105	89.5	460	4.1	1
	1200	213TC	**VECP3764T**	3,364	SDM	21.36	165	90.2	230/460	4.5	1, 30
5	3600	184TC	**VECP3663T-4**	2,715	SDM	16.98	108	89.5	460	5.7	1
	1800	184TC	**VECP3665T**	2,378	SDM	16.98	119	89.5	230/460	6.5	1
		184TC	**VECP3665T-4**	2,378	SDM	16.98	119	89.5	460	6.6	1
	1200	215TC	**VECP3768T**	3,403	SDM	21.36	225	90.2	230/460	7.3	1, 30
7 1/2	3600	213TC	**VECP3769T-4**	3,636	SDM	21.36	173	91.7	460	8.6	1
	1800	213TC	**VECP3770T**	3,090	SDM	21.36	170	91.7	230/460	9.5	1
		213TC	**VECP3770T-4**	3,090	SDM	21.36	170	91.7	460	9.5	1
	1200	254TC	**VECP2276T**	5,332	SDM	27.40	338	91	230/460	10.7	1, 30
10	3600	215TC	**VECP3771T-4**	3,851	SDM	21.36	203	92.4	460	11	1
	1800	215TC	**VECP3774T**	3,650	SDM	21.36	231	92.4	230/460	12.5	1
		215TC	**VECP3774T-4**	3,650	SDM	21.36	231	92.4	460	12.5	1
	1200	256TC	**VECP2332T**	6,674	SDM	27.40	348	91	230/460	14.2	1, 30
15	1800	254TC	**VECP2333T**	5,154	SDM	27.40	314	92.4	230/460	18.1	1, 30
		254TC	**VECP2333T-4**	5,154	SDM	27.40	303	92.4	460	18.1	1
	1200	284TC	**VECP4100T**	7,869	SDM	30.68	503	91.7	230/460	21	1, 30
20	1800	256TC	**VECP2334T**	5,464	SDM	27.40	338	93	230/460	24	1, 30
		256TC	**VECP2334T-4**	5,464	SDM	27.40	365	93	460	24	1
	1200	286TC	**VECP4102T**	10,270	SDM	30.68	528	91.7	230/460	27	1
25	1800	284TC	**VECP4103T**	7,234	SDM	30.68	483	93.6	230/460	31	1, 30
	1200	324TC	**VECP4111T**	10,809	SDM	33.03	636	93	230/460	32	1, 30

(a) See notes on inside back flap.
Cast iron frame
Red catalog number indicates **NEW** product.

New! Meets IEEE Std 841™-2021

841XL, three phase, totally enclosed, 460 volts and 575 volts

1 thru 300 Hp

IP56

Features:

- Meets and exceeds the requirements of IEEE Std. 841
- Patented PLS lubrication system for bearing longevity
- Inverter ready nameplate
- Meets IEEE 45 on nameplate
- Division 2, Class I, Groups A, B, C, D markings on nameplate
- IEEE 841 test report ships with the motor
- 5 year warranty

Applications:

- Chemical, oil & gas
- Pulp & paper, forest products
- Metals & foundries
- Cement, aggregate & above ground mining
- Food processing
- Power generation
- Coastal marine

Hp	RPM	NEMA Frame	Catalog Number	List Price	Disc. Sym.	"C" Dim.	Aprx. Wt. (lb)	Full Load Efficiency	Voltage	Full Load Amps	Notes (a)
460 volts											
1	3600	143T	**ECP83580T-4**	1,639	SD8	12.88	60	84	460	1.4	1
		143T	**ENCP83580T-4**	1,562	SD8	11.37	56	84	460	1.3	1, 60
	1800	143T	**ECP83581T-4**	1,800	SD8	12.88	69	87.5	460	1.5	1
		143T	**ENCP83581T-4**	1,709	SD8	11.37	60	87.5	460	1.5	1, 60
	1200	145T	**ECP83582T-4**	1,930	SD8	12.88	69	82.5	460	1.7	1
1 1/2	3600	143T	**ECP83583T-4**	1,760	SD8	12.88	69	85.5	460	2	1
	1800	145T	**ECP83584T-4**	1,831	SD8	12.87	73	88.5	460	2.1	1
	1200	182T	**ECP83667T-4**	2,223	SD8	15.93	114	87.5	460	2.5	1
2	3600	145T	**ECP83586T-4**	1,932	SD8	12.88	78	85.5	460	2.5	1
	1800	145T	**ECP83587T-4**	1,913	SD8	12.87	78	88.5	460	2.8	1
	1200	184T	**ECP83664T-4**	2,416	SD8	15.93	130	88.5	460	3.2	1
3	3600	182T	**ECP83660T-4**	2,303	SD8	15.93	116	88.5	460	3.4	1
	1800	182T	**ECP83661T-4**	2,422	SD8	15.93	116	89.5	460	4.1	1
	1200	213T	**ECP83764T-4**	3,368	SD8	19.50	165	89.5	460	4.5	1
5	3600	184T	**ECP83663T-4**	2,837	SD8	15.93	132	88.5	460	5.7	1
	1800	184T	**ECP83665T-4**	2,468	SD8	15.93	127	89.5	460	6.6	1
	1200	215T	**ECP83768T-4**	3,482	SD8	19.50	193	89.5	460	7.1	1
7 1/2	3600	213T	**ECP83769T-4**	3,703	SD8	19.50	179	91.7	460	8.6	1
	1800	213T	**ECP83770T-4**	3,109	SD8	19.50	199	91.7	460	9.5	1
	1200	254T	**ECP82276T-4**	5,022	SD8	24.78	343	91	460	10.5	1
10	3600	215T	**ECP83771T-4**	3,942	SD8	19.50	225	91	460	11.3	1
	1800	215T	**ECP83774T-4**	3,681	SD8	19.50	231	91.7	460	12.2	1
	1200	256T	**ECP82332T-4**	6,411	SD8	24.78	359	91	460	14.1	1
15	3600	254T	**ECP82394T-4**	5,130	SD8	24.78	308	91	460	17	1
	1800	254T	**ECP82333T-4**	4,739	SD8	24.78	322	92.4	460	17.6	1
	1200	284T	**ECP84100T-4**	7,406	SD8	27.93	447	91.7	460	19.4	1
20	3600	256T	**ECP84106T-4**	5,882	SD8	24.78	328	91.7	460	22	1
	1800	256T	**ECP82334T-4**	5,124	SD8	24.78	350	93	460	23	1
	1200	286T	**ECP84102T-4**	9,981	SD8	27.93	442	91.7	460	26	1
25	3600	284TS	**ECP84107T-4**	7,191	SD8	26.56	360	91.7	460	28	1
	1800	284T	**ECP84103T-4**	6,646	SD8	27.93	441	93.6	460	30	1
	1200	324T	**ECP84111T-4**	10,519	SD8	30.66	638	93	460	32	1
30	3600	286TS	**ECP84108T-4**	8,614	SD8	26.56	442	91.7	460	34	1
	1800	286T	**ECP84104T-4**	7,826	SD8	27.93	545	93.6	460	36	1
	1200	326T	**ECP84117T-4**	13,689	SD8	30.66	637	93	460	38.6	1
40	3600	324TS	**ECP84109T-4**	11,785	SD8	29.16	626	92.4	460	44	1
	1800	324T	**ECP84110T-4**	10,420	SD8	30.66	629	94.1	460	46	1
	1200	364T	**ECP84308T-4**	16,771	SD8	33.49	927	94.1	460	49.4	1
50	3600	326TS	**ECP84114T-4**	12,293	SD8	29.16	623	93	460	55	1
	1800	326T	**ECP84115T-4**	12,233	SD8	30.66	679	94.5	460	57	1
	1200	365T	**ECP84312T-4**	19,527	SD8	33.49	928	94.1	460	61.7	1

(a) See notes on inside back flap.

Cast iron frame

841XL, three phase, totally enclosed, 460 volts and 575 volts

Hp	RPM	NEMA Frame	Catalog Number	List Price	Disc. Sym.	"C" Dim.	Aprx. Wt. (lb)	Full Load Efficiency	Voltage	Full Load Amps	Notes (a)
460 volts (continued)											
	3600	364TS	**ECP84310T-4**	17,743	SD8	31.37	905	95	460	65.1	1
60	1800	364T	**ECP84314T-4**	17,565	SD8	33.49	913	95	460	68	1
	1200	404T	**ECP84403T-4**	23,134	SD8	38.04	1271	95	460	69	1
	3600	365TS	**ECP84313T-4**	20,061	SD8	31.37	1045	94.5	460	80.7	1
75	1800	365T	**ECP84316T-4**	19,939	SD8	33.49	971	95.4	460	85.9	1
	1200	405T	**ECP84404T-4**	28,021	SD8	38.20	1327	94.5	460	86.9	1
	3600	405TS	**ECP84402T-4**	24,113	SD8	35.04	1277	95	460	110	1
	1800	405T	**ECP84400T-4**	25,217	SD8	38.20	1299	95.4	460	112	1
100		405T	**ECP84400TR-4**	26,339	SD8	38.20	1326	95.4	460	112	1, 5
	1200	444T	**ECP84409T-4**	30,822	SD8	44.75	1940	95	460	119	1
		444T	**ECP84409TR-4**	32,752	SD8	44.97	1599	95	460	119	1, 5
	3600	444TS	**ECP84412T-4**	28,200	SD8	40.98	1968	95	460	137	1
	1800	444T	**ECP84410T-4**	28,604	SD8	44.75	2020	95.4	460	144	1
125		444T	**ECP84410TR-4**	30,534	SD8	44.97	1669	95.4	460	144	1, 5
	1200	445T	**ECP84411T-4**	34,984	SD8	44.75	2083	95	460	146	1
		445T	**ECP84411TR-4**	36,914	SD8	44.97	1874	95	460	146	1, 5
	3600	445TS	**ECP84413T-4**	32,406	SD8	40.98	2053	95	460	164	1
	1800	445T	**ECP84406T-4**	33,827	SD8	44.75	2184	95.8	460	169	1
150		445T	**ECP84406TR-4**	35,935	SD8	44.75	2130	95.8	460	169	1
	1200	447T	**ECP844156T-4**	38,885	SD8	48.24	2536	95.8	460	170	1
		447T	**ECP844156TR-4**	40,811	SD8	48.24	2615	95.8	460	170	1, 5
	3600	447TS	**ECP84416T-4**	42,841	SD8	44.48	2433	96.2	460	213	1
	1800	447T	**ECP84407T-4**	40,698	SD8	48.24	2582	96.2	460	222	1
200		447T	**ECP84407TR-4**	42,626	SD8	48.24	2608	96.2	460	222	1, 5
	1200	449T	**ECP844206T-4**	51,658	SD8	53.24	3109	95.8	460	225	1
		449T	**ECP844206TR-4**	53,586	SD8	53.24	3108	95.8	460	225	1, 5
	3600	449TS	**ECP844252T-4**	69,026	SD8	49.48	2790	96.2	460	266	1
	1800	449T	**ECP84408T-4**	51,952	SD8	53.24	2959	96.2	460	276	1
250		449T	**ECP84408TR-4**	53,828	SD8	53.24	2995	96.2	460	276	1, 5
	1200	449T	**ECP844256T-4**	72,505	SD8	53.24	3102	95.8	460	287	1
		449T	**ECP844256TR-4**	76,579	SD8	53.49	3125	95.8	460	286	1, 5
	3600	L449T	**ECP844302T-4**	98,425	SD8	71.78	3700	95.9	460	318	1,10
	1800	L449T	**ECP844304T-4**	80,548	SD8	71.78	3700	96.5	460	311	1,10
300		L449T	**ECP844304TR-4**	83,770	SD8	71.78	3700	96.5	460	311	1,5,10
	1200	L449T	**ECP844306T-4**	103,636	SD8	60.47	3683	95.8	460	340	1
		L449T	**ECP844306TR-4**	106,613	SD8	60.47	3683	95.8	460	340	1, 5
	3600	L449T	**ECP844352T-4**	112,032	SD8	71.78	3700	96	460	372	1,10
350	1800	L449T	**ECP844354T-4**	107,785	SD8	71.78	3700	96.2	460	385	1,10
		L449T	**ECP844354TR-4**	110,180	SD8	71.78	3700	96.2	460	385	1,5,10
575 volts											
	3600	143T	**ECP83580T-5**	1,639	SD8	12.88	63	84	575	1.1	1
1	1800	143T	**ECP83581T-5**	1,800	SD8	12.87	67	87.5	575	1.2	1
	1200	145T	**ECP83582T-5**	1,930	SD8	12.88	69	82.5	575	1.4	1
	3600	143T	**ECP83583T-5**	1,760	SD8	12.87	71	85.5	575	1.6	1
1 1/2	1800	145T	**ECP83584T-5**	1,831	SD8	12.87	73	88.5	575	1.7	1
	1200	182T	**ECP83667T-5**	2,223	SD8	15.93	105	87.5	575	2	1
	3600	145T	**ECP83586T-5**	1,825	SD8	12.88	79	85.5	575	2	1
2	1800	145T	**ECP83587T-5**	1,913	SD8	12.87	77	86.5	575	2.3	1
	1200	184T	**ECP83664T-5**	2,416	SD8	15.93	128	88.5	575	2.5	1
	3600	182T	**ECP83660T-5**	2,303	SD8	15.93	116	88.5	575	2.7	1
3	1800	182T	**ECP83661T-5**	2,422	SD8	15.93	118	89.5	575	3.3	1
	1200	213T	**ECP83764T-5**	3,368	SD8	19.50	211	89.5	575	3.6	1
	3600	184T	**ECP83663T-5**	2,837	SD8	15.93	130	88.5	575	4.6	1
5	1800	184T	**ECP83665T-5**	2,468	SD8	15.93	127	89.5	575	5.3	1
	1200	215T	**ECP83768T-5**	3,482	SD8	19.50	226	89.5	575	5.7	1
	3600	213T	**ECP83769T-5**	3,703	SD8	19.50	179	91.7	575	6.9	1
7 1/2	1800	213T	**ECP83770T-5**	3,109	SD8	19.50	199	91.7	575	7.6	1
	1200	254T	**ECP82276T-5**	5,269	SD8	24.78	348	91.7	575	8.4	1

(a) See notes on inside back flap.
Cast iron frame
Red catalog number indicates **NEW** product.

841XL, three phase, totally enclosed, 460 volts and 575 volts

Hp	RPM	NEMA Frame	Catalog Number	List Price	Disc. Sym.	"C" Dim.	Aprx. Wt. (lb)	Full Load Efficiency	Voltage	Full Load Amps	Notes (a)
575 volts (continued)											
	3600	215T	**ECP83771T-5**	3,942	SD8	19.50	225	90.2	575	9	1
10	1800	215T	**ECP83774T-5**	3,681	SD8	19.50	231	91.7	575	9.8	1
	1200	256T	**ECP82332T-5**	6,411	SD8	24.78	357	91.7	575	11.4	1
	3600	254T	**ECP82394T-5**	5,130	SD8	24.78	305	91.7	575	13.7	1
15	1800	254T	**ECP82333T-5**	4,739	SD8	24.78	318	92.4	575	14.1	1
	1200	284T	**ECP84100T-5**	7,406	SD8	27.93	445	91.7	575	15.6	1
	3600	256T	**ECP84106T-5**	5,882	SD8	24.78	324	91.7	575	17.9	1
20	1800	256T	**ECP82334T-5**	5,124	SD8	24.78	361	93	575	18.3	1
	1200	286T	**ECP84102T-5**	9,981	SD8	27.93	443	91.7	575	21	1
	3600	284TS	**ECP84107T-5**	7,191	SD8	26.56	429	91.7	575	23	1
25	1800	284T	**ECP84103T-5**	6,646	SD8	27.93	345	93.6	575	24	1
	1200	324T	**ECP84111T-5**	10,519	SD8	30.66	623	93	575	25.4	1
	3600	286TS	**ECP84108T-5**	8,614	SD8	26.56	422	91.7	575	27	1
30	1800	286T	**ECP84104T-5**	7,826	SD8	27.93	489	93.6	575	28	1
	1200	326T	**ECP84117T-5**	13,689	SD8	30.66	635	93	575	31	1
	3600	324TS	**ECP84109T-5**	11,785	SD8	29.16	624	92.4	575	35	1
40	1800	324T	**ECP84110T-5**	10,420	SD8	30.66	635	94.1	575	37	1
	1200	364T	**ECP84308T-5**	16,771	SD8	33.49	922	94.1	575	39.5	1
	3600	326TS	**ECP84114T-5**	12,293	SD8	29.16	662	93	575	44	1
50	1800	326T	**ECP84115T-5**	12,233	SD8	30.66	653	94.5	575	45	1
	1200	365T	**ECP84312T-5**	19,527	SD8	33.49	924	94.1	575	49.3	1
	3600	364TS	**ECP84310T-5**	17,743	SD8	31.37	932	95	575	52	1
60	1800	364T	**ECP84314T-5**	17,565	SD8	33.49	937	95	575	54.4	1
	1200	404T	**ECP84403T-5**	23,134	SD8	38.04	1275	95	575	55.2	1
	3600	365TS	**ECP84313T-5**	20,061	SD8	31.37	998	94.5	575	64.5	1
75	1800	365T	**ECP84316T-5**	19,939	SD8	33.49	985	95.4	575	68.7	1
	1200	405T	**ECP84404T-5**	28,021	SD8	38.04	1283	94.5	575	69.5	1
	3600	405TS	**ECP84402T-5**	24,113	SD8	35.04	1287	95	575	88	1
100	1800	405T	**ECP84400T-5**	25,217	SD8	38.04	1304	95.4	575	89.6	1
	1200	444T	**ECP84409T-5**	30,822	SD8	44.75	1885	95	575	92	1
	3600	444TS	**ECP84412T-5**	28,200	SD8	40.98	1799	95.4	575	109	1
125	1800	444T	**ECP84410T-5**	28,604	SD8	44.75	1915	95.8	575	111	1
	1200	445T	**ECP84411T-5**	34,984	SD8	44.75	2000	95.4	575	114	1
	3600	445TS	**ECP84413T-5**	32,406	SD8	40.98	2062	96.2	575	131	1
150	1800	445T	**ECP84406T-5**	33,827	SD8	44.75	1886	96.2	575	132	1
	1200	447T	**ECP844156TR-5**	40,811	SD8	48.24	2595	95.8	575	136	1, 5
	3600	447TS	**ECP84416T-5**	42,841	SD8	44.48	2182	96.2	575	177	1
200	1800	447T	**ECP84407T-5**	40,698	SD8	48.24	2606	96.2	575	178	1
		447T	**ECP84407TR-5**	42,626	SD8	48.24	2618	96.2	575	178	1, 5
	1200	449T	**ECP844206TR-5**	53,586	SD8	53.24	3100	95.8	575	180	1, 5
	3600	449TS	**ECP844252T-5**	69,026	SD8	49.48	2784	96.2	575	212	1
250	1800	449T	**ECP84408T-5**	51,952	SD8	53.24	2932	96.2	575	220	1
		449T	**ECP84408TR-5**	53,828	SD8	53.24	2732	96.2	575	220	1, 5
	1200	449T	**ECP844256TR-5**	76,579	SD8	53.47	3125	95.8	575	229	1, 5
300	1200	L449T	**ECP844306TR-5**	87,297	SD8	60.47	3683	95.8	575	272	1, 5

(a) See notes on inside back flap
Cast iron frame
Red catalog number indicates **NEW** product.

New! Meets IEEE Std 841™-2021

841XL, three phase, TEFC, 460 volts and 575 volts, C-Face

1 thru 75 Hp

IP56

Features:

- Meets and exceeds the requirements of IEEE Std. 841
- Patented PLS lubrication system for bearing longevity
- Inverter ready nameplate
- Meets IEEE 45 on nameplate
- Division 2, Class I, Groups A, B, C, D markings on nameplate
- IEEE 841 test report ships with the motor
- Locked bearing to allow mounting in any configuration
- 5 year warranty

Applications:

- Chemical, oil & gas
- Pulp & paper, forest products
- Metals & foundries
- Cement, aggregate & above ground mining
- Food processing
- Power generation
- Coastal marine

Hp	RPM	NEMA Frame	Catalog Number	List Price	Disc. Sym.	"C" Dim.	Aprx. Wt. (lb)	Full Load Efficiency	Voltage	Full Load Amps	Notes (a)
C-Face, foot mounted, 460 volts											
1	3600	56C	**CECP83580-4**	2,105	SD8	14.81	56	84	460	1.4	10
		143TC	**CECP83580T-4**	1,709	SD8	13.38	63	84	460	1.4	1
		143TC	**CENCP83580T-4**	1,633	SD8	12.00	61	84	460	1.3	1, 60
	1800	56C	**CECP83581-4**	2,267	SD8	14.81	56	87.5	460	1.5	10
		143TC	**CECP83581T-4**	1,870	SD8	13.38	71	87.5	460	1.5	1
		143TC	**CENCP83581T-4**	1,776	SD8	12.00	64	87.5	460	1.5	1, 60
	1200	56C	**CECP83582-4**	2,397	SD8	14.81	56	82.5	460	1.7	10
		145TC	**CECP83582T-4**	2,001	SD8	13.38	56	82.5	460	1.7	1
1 1/2	3600	143TC	**CECP83583T-4**	1,830	SD8	13.38	71	85.5	460	2	1
	1800	145TC	**CECP83584T-4**	1,905	SD8	13.38	75	88.5	460	2.1	1
	1200	182TC	**CECP83667T-4**	2,296	SD8	16.69	99	87.5	460	2.5	1
2	3600	145TC	**CECP83586T-4**	2,007	SD8	13.38	80	85.5	460	2.5	1
	1800	145TC	**CECP83587T-4**	1,984	SD8	13.38	78	88.5	460	2.8	1
	1200	184TC	**CECP83664T-4**	2,642	SD8	16.69	113	88.5	460	3.2	1
3	3600	182TC	**CECP83660T-4**	2,439	SD8	16.69	121	88.5	460	3.4	1
	1800	182TC	**CECP83661T-4**	2,584	SD8	16.69	120	89.5	460	4.1	1
	1200	213TC	**CECP83764T-4**	3,530	SD8	20.23	211	89.5	460	4.5	1
5	3600	184TC	**CECP83663T-4**	2,964	SD8	16.69	136	88.5	460	5.7	1
	1800	184TC	**CECP83665T-4**	2,598	SD8	16.69	131	89.5	460	6.6	1
	1200	215TC	**CECP83768T-4**	3,612	SD8	20.23	226	89.5	460	7.1	1
7 1/2	3600	213TC	**CECP83769T-4**	3,843	SD8	20.23	179	91.7	460	8.6	1
	1800	213TC	**CECP83770T-4**	3,291	SD8	20.23	178	91.7	460	9.5	1
	1200	254TC	**CECP82276T-4**	5,204	SD8	25.28	346	91	460	10.5	1
10	3600	215TC	**CECP83771T-4**	4,079	SD8	20.23	225	91	460	11.3	1
	1800	215TC	**CECP83774T-4**	3,978	SD8	20.23	231	91.7	460	12.2	1
	1200	256TC	**CECP82332T-4**	6,709	SD8	25.28	362	91	460	14.1	1
15	3600	254TC	**CECP82394T-4**	5,578	SD8	25.28	308	91	460	17	1
	1800	254TC	**CECP82333T-4**	5,446	SD8	25.28	322	92.4	460	17.6	1
	1200	284TC	**CECP84100T-4**	8,114	SD8	27.93	420	91.7	460	19.4	1
20	3600	256TC	**CECP84106T-4**	6,327	SD8	25.28	328	91.7	460	22	1
	1800	256TC	**CECP82334T-4**	5,762	SD8	25.28	356	93	460	23	1
	1200	286TC	**CECP84102T-4**	10,619	SD8	27.93	460	91.7	460	26	1
25	3600	284TSC	**CECP84107T-4**	8,629	SD8	26.56	433	91.7	460	28	1
	1800	284TC	**CECP84103T-4**	8,087	SD8	27.93	430	93.6	460	30	1
	1200	324TC	**CECP84111T-4**	11,960	SD8	30.66	660	93	460	32	1
30	3600	286TSC	**CECP84108T-4**	10,052	SD8	26.56	470	91.7	460	34	1
	1800	286TC	**CECP84104T-4**	9,261	SD8	27.93	465	93.6	460	36	1
	1200	326TC	**CECP84117T-4**	15,124	SD8	30.66	640	93	460	38.6	1

(a) See notes on inside back flap.

Cast iron frame

841XL, three phase, TEFC, 460 volts and 575 volts, C-Face

Hp	RPM	NEMA Frame	Catalog Number	List Price	Disc. Sym.	"C" Dim.	Aprx. Wt. (lb)	Full Load Efficiency	Voltage	Full Load Amps	Notes (a)
C-Face, foot mounted, 460 volts (continued)											
40	3600	324TSC	**CECP84109T-4**	13,368	SD8	29.16	587	92.4	460	44	1
	1800	324TC	**CECP84110T-4**	12,004	SD8	30.66	600	94.1	460	46	1
	1200	364TC	**CECP84308T-4**	18,298	SD8	33.49	908	94.1	460	49.4	1
50	3600	326TSC	**CECP84114T-4**	13,881	SD8	29.16	670	93	460	55	1
	1800	326TC	**CECP84115T-4**	13,816	SD8	30.66	683	94.5	460	57	1
	1200	365TC	**CECP84312T-4**	21,053	SD8	33.49	925	94.1	460	61.7	1
60	3600	364TSC	**CECP84310T-4**	19,269	SD8	31.37	899	95	460	65.1	1
	1800	364TC	**CECP84314T-4**	19,091	SD8	33.49	906	95	460	68	1
75	3600	365TSC	**CECP84313T-4**	21,587	SD8	31.37	1007	94.5	460	80.7	1
	1800	365TC	**CECP84316T-4**	21,465	SD8	33.49	1050	95.4	460	85.9	1
C-Face, foot mounted, 575 volts											
1	1800	143TC	**CECP83581T-5**	1,870	SD8	13.38	71	87.5	575	1.2	1
2	1800	145TC	**CECP83587T-5**	1,984	SD8	13.38	80	86.5	575	2.3	1
3	1800	182TC	**CECP83661T-5**	2,584	SD8	16.69	122	89.5	575	3.3	1
5	1800	184TC	**CECP83665T-5**	2,598	SD8	16.69	131	89.5	575	5.3	1
7 1/2	1800	213TC	**CECP83770T-5**	3,291	SD8	20.23	211	91.7	575	7.6	1
10	1800	215TC	**CECP83774T-5**	3,978	SD8	20.23	231	91.7	575	9.8	1
15	1800	254TC	**CECP82333T-5**	5,446	SD8	25.28	309	92.4	575	14.1	1
20	1800	256TC	**CECP82334T-5**	5,762	SD8	25.28	357	93	575	18.3	1
25	1800	284TC	**CECP84103T-5**	8,087	SD8	27.93	444	93.6	575	24	1
30	1800	286TC	**CECP84104T-5**	9,261	SD8	27.93	487	93.6	575	28	1
40	1800	324TC	**CECP84110T-5**	12,004	SD8	30.66	670	94.1	575	37	1
50	1800	326TC	**CECP84115T-5**	13,816	SD8	30.66	663	94.5	575	45	1
C-Face, footless, 460 volts											
1	3600	143TC	**VENCP83580T-4**	1,548	SD8	12.00	59	84	460	1.3	1, 60
	1800	143TC	**VENCP83581T-4**	1,671	SD8	12.00	63	87.5	460	1.5	1, 60
1 1/2	3600	143TC	**VECP83583T-4**	1,812	SD8	14.56	75	85.5	460	2	1
	1800	145TC	**VECP83584T-4**	1,885	SD8	14.56	76	88.5	460	2.1	1
2	3600	145TC	**VECP83586T-4**	1,987	SD8	14.56	83	85.5	460	2.5	1
	1800	145TC	**VECP83587T-4**	1,965	SD8	14.56	79	88.5	460	2.8	1
3	3600	182TC	**VECP83660T-4**	2,414	SD8	16.69	121	88.5	460	3.4	1
	1800	182TC	**VECP83661T-4**	2,559	SD8	16.69	117	89.5	460	4.1	1
5	3600	184TC	**VECP83663T-4**	2,941	SD8	16.69	132	88.5	460	5.7	1
	1800	184TC	**VECP83665T-4**	2,573	SD8	16.69	128	89.5	460	6.6	1
7 1/2	3600	213TC	**VECP83769T-4**	3,794	SD8	20.24	179	91.7	460	8.6	1
	1800	213TC	**VECP83770T-4**	3,241	SD8	20.24	211	91.7	460	9.5	1
10	3600	215TC	**VECP83771T-4**	4,029	SD8	20.24	225	91	460	11.3	1
	1800	215TC	**VECP83774T-4**	3,928	SD8	20.24	231	91.7	460	12.2	1
15	3600	254TC	**VECP82394T-4**	5,349	SD8	25.28	304	91	460	17	1
	1800	254TC	**VECP82333T-4**	5,215	SD8	25.28	324	92.4	460	17.6	1
20	3600	256TC	**VECP84106T-4**	6,097	SD8	25.28	319	91.7	460	22	1
	1800	256TC	**VECP82334T-4**	5,528	SD8	25.28	355	93	460	23	1

(a) See notes on inside back flap.
Cast iron frame

New! Meets IEEE Std 841™-2021

661XL / IEEE 841, three phase, TEFC, 460 volts, foot mounted

5 thru 75 Hp

IP56

Features:

- Exceeds the requirements of IEEE Std. 841
- Roller bearing for belted applications, 40,000 hours L10 life per API 661
- Vertical lifting provisions for shaft up and shaft down mounting
- Patented PLS bearing lubrication system
- IP56 enclosure: dome shaft slinger, bronze labyrinth shaft seal, gasketed conduit box and cover
- Inverter ready nameplate
- Division 2, Class I, Groups A, B, C, D markings on nameplate
- Meets IEEE 45 on nameplate
- IEEE 841 test report ships with the motor
- 5 year warranty

Applications:

- Belt driven heat exchangers

Hp	RPM	NEMA Frame	Catalog Number	List Price	Disc. Sym.	"C" Dim.	Aprx. Wt. (lb)	Full Load Efficiency	Voltage	Full Load Amps	Notes (a)
5	1800	184T	**ECP63665T-4**	2,468	SD6	15.93	128	89.5	460	6.6	1
7 1/2	1800	213T	**ECP63770TR-4**	3,533	SD6	19.49	195	91.7	460	9.5	1, 5
10	1800	215T	**ECP63774TR-4**	4,104	SD6	19.49	231	91.7	460	12.2	1, 5
15	1800	254T	**ECP62333TR-4**	5,300	SD6	24.88	324	92.4	460	17.6	1, 5
20	1800	256T	**ECP62334TR-4**	5,685	SD6	24.88	355	93	460	23	1, 5
25	1800	284T	**ECP64103TR-4**	7,350	SD6	28.01	461	93.6	460	30	1, 5
30	1800	286T	**ECP64104TR-4**	8,529	SD6	28.01	487	93.6	460	36	1, 5
40	1800	324T	**ECP64110TR-4**	11,314	SD6	30.76	600	94.1	460	46	1, 5
50	1800	326T	**ECP64115TR-4**	13,131	SD6	30.76	687	94.5	460	57	1, 5
60	1800	364T	**ECP64314TR-4**	17,730	SD6	33.48	936	95	460	68	1, 5
75	1800	365T	**ECP64316TR-4**	20,104	SD6	33.48	976	95.4	460	85.9	1, 5

(a) See notes on inside back flap.
Cast iron frame

RPM XE, extreme efficiency, totally enclosed, 460 volts

10 thru 100 Hp

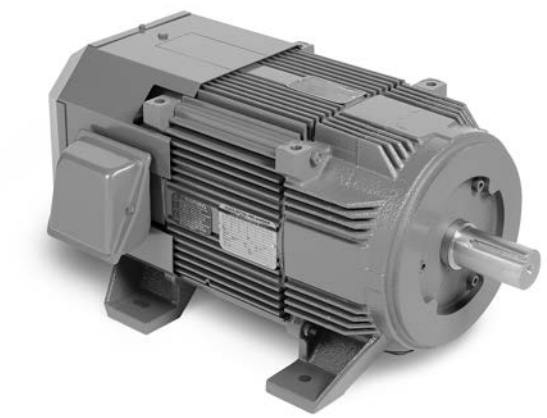

RPM XE, TEFC standard NEMA frame

Features:

- TEFC, 1800 RPM, severe duty, Design B, 1.15 SF
- Efficiency two to four levels above NEMA premium
- Power dense and standard NEMA frame sizes
- Designed for across the line operation
- Suitable for adjustable frequency power in scalar mode
- Up to IE3 combined system efficiency when properly matched with VFD running in V/Hz or scalar mode
- Operates at true synchronous speed regardless of load
- Up to IE5 Efficiency when run across the line

Applications:

- Centrifugal fan and pump applications
- Continuous applications demanding the ultimate efficiency
- Compressors
- Applications demanding reduced weight or inertia

Standard NEMA frame

Hp	RPM	Frame	Encl	Catalog Number	List Price	Disc. Sym.	"C" Dim.	Aprx. Wt. (lb)	*Full Load Efficiency	Full Load Amps	Dimension Sheet	Notes (a)
10	1800	HL215T	TEFC	**XEFRPM21104**	9,816	RP5	21.77	170	94.6	10	619704-001	
15	1800	HL254T	TEFC	**XEFRPM25154**	10,634	RP5	23.89	195	94.9	15	619702-001	
20	1800	HL256T	TEFC	**XEFRPM25204**	11,452	RP5	24.89	210	94.9	20	619703-001	
25	1800	HL284T	TEFC	**XEFRPM28254**	12,271	RP5	26.38	290	95.4	25	619696-001	
30	1800	HL286T	TEFC	**XEFRPM28304**	13,089	RP5	27.37	315	95.4	30	619697-001	
40	1800	HL324T	TEFC	**XEFRPM32404**	14,096	RP5	28.81	435	96.4	40	619698-001	
50	1800	HL326T	TEFC	**XEFRPM32504**	15,046	RP5	30.81	500	96.6	50	619699-001	
60	1800	HL364T	TEFC	**XEFRPM36604**	20,168	RP5	32.93	690	97.0	60	619707-001	
75	1800	HL365T	TEFC	**XEFRPM36754**	23,559	RP5	35.19	775	97.3	75	619706-001	
100	1800	HL405T	TEFC	**XEFRPM401004**	30,931	RP5	40.58	955	97.3	100	619705-001	

(a) See notes on inside back flap.

Dirty Duty Plus, three phase, TEFC

1/2 thru 10 Hp

IP56

Features:

- Cast iron endplates & conduit box
- 300 series stainless steel shaft extension
- 2 part epoxy paint system passed 2,000+ hours salt fog test per ASTM B 117
- Permanently lubricated, double sealed ball bearings
- IP56 enclosure includes: labyrinth shaft seals, gasketed conduit box and cover
- Inverter ready nameplate
- Meets IEEE 45 on nameplate

Applications:

- Chemical, oil & gas
- Pulp & paper, forest products
- Coastal marine

Hp	RPM	NEMA Frame	Enclosure	Catalog Number	List Price	Disc. Sym.	"C" Dim.	Aprx. Wt. (lb)	Full Load Efficiency	Voltage	Full Load Amps	Notes (a)
Foot mounted												
1/2	1800	56	TEFC	**DM3538**	984	SDD	11.35	27	75.5	230/460	0.9	12, 15
3/4	1800	56	TEFC	**DM3542**	1,028	SDD	11.35	30	74	230/460	1.4	12, 15
1	1800	56	TEFC	**EDM3546**	1,534	SDD	12.85	35	85.5	230/460	1.5	1
C-Face, foot mounted												
1/2	3600	56C	TEFC	**CDM3537**	990	SDD	11.34	26	68	230/460	0.9	12, 15
	1800	56C	TEFC	**CDM3538**	1,030	SDD	11.34	29	74	230/460	0.9	12, 15
		56C	TENV	**CNDM3538**	1,030	SDD	11.05	34	80	230/460	0.8	12
	1200	56C	TEFC	**CDM3539**	1,336	SDD	11.34	30	72	230/460	1.3	12, 15
3/4	1800	56C	TEFC	**CDM3542**	1,070	SDD	11.34	33	75.5	230/460	1.4	12, 15
		56C	TENV	**CNDM3542**	1,070	SDD	11.05	37	78.5	230/460	1.4	12
	1200	56C	TEFC	**CDM3543**	1,355	SDD	12.84	38	77	230/460	1.4	12, 15
1	3600	56C	TEFC	**CEDM3545**	1,426	SDD	12.28	39	77	230/460	1.4	12
	1800	56C	TEFC	**CEDM3546**	1,578	SDD	12.84	38	85.5	230/460	1.5	1
		56C	TENV	**CNEDM3546**	1,578	SDD	11.05	41	85.5	230/460	1.5	1
		143TC	TENV	**CNEDM3546T**	1,594	SDD	12.12	42	85.5	230/460	1.5	1
	1200	56C	TEFC	**CEDM3556**	1,764	SDD	12.28	45	82.5	230/460	1.8	1
1 1/2	3600	56C	TEFC	**CEDM3550**	1,559	SDD	13.28	42	84	230/460	1.9	1
	1800	56C	TEFC	**CEDM3554**	1,707	SDD	12.24	42	86.5	230/460	2.2	1
		145TC	TEFC	**CEDM3554T**	1,723	SDD	13.35	41	86.5	230/460	2.2	1
		145TC	TENV	**CNEDM3554T**	1,723	SDD	12.12	48	86.5	230/460	2.1	1
2	3600	56C	TEFC	**CEDM3555**	1,668	SDD	13.28	38	85.5	230/460	2.5	1
	1800	56C	TEFC	**CEDM3558**	1,781	SDD	13.28	49	86.5	230/460	2.9	1
		145TC	TEFC	**CEDM3558T**	1,797	SDD	13.35	52	86.5	230/460	2.9	1
3	3600	145TC	TEFC	**CEDM3559T**	1,787	SDD	14.23	59	86.5	230/460	3.6	1
	1800	182TC	TEFC	**CEDM3611T**	1,984	SDD	16.60	90	89.5	230/460	4.2	1
	1200	213TC	TEFC	**CEDM3704T**	3,054	SDD	19.76	154	89.5	230/460	4.6	1
5	3600	184TC	TEFC	**CEDM3613T**	2,122	SDD	16.60	97	88.5	230/460	5.9	1
	1800	184TC	TEFC	**CEDM3615T**	2,029	SDD	18.10	108	89.5	230/460	6.7	1
	1200	215TC	TEFC	**CEDM3708T**	3,329	SDD	21.26	181	89.5	230/460	7.2	1
7 1/2	3600	213TC	TEFC	**CEDM3709T**	3,236	SDD	18.63	138	89.5	230/460	9	1
	1800	213TC	TEFC	**CEDM3710T**	3,018	SDD	19.76	146	91.7	230/460	9.5	1
10	3600	215TC	TEFC	**CEDM3711T**	3,268	SDD	18.63	138	90.2	230/460	11.8	1
	1800	215TC	TEFC	**CEDM3714T**	3,287	SDD	21.26	185	91.7	230/460	12	1

(a) See notes on inside back flap.

Dirty Duty Plus, three phase, TEFC

Hp	RPM	NEMA Frame	Enclosure	Catalog Number	List Price	Disc. Sym.	"C" Dim.	Aprx. Wt. (lb)	Full Load Efficiency	Voltage	Full Load Amps	Notes (a)
C-Face, footless												
1/2	3600	56C	TEFC	**VDM3537**	981	SDD	11.35	25	68	230/460	0.9	12, 15
	1800	56C	TEFC	**VDM3538**	1,015	SDD	11.35	28	75.5	230/460	0.9	12, 15
		56C	TENV	**VNDM3538**	1,015	SDD	11.05	35	80	230/460	0.8	12
3/4	3600	56C	TEFC	**VDM3541**	1,037	SDD	11.35	27	72	230/460	1.2	12, 15
	1800	56C	TEFC	**VDM3542**	1,056	SDD	12.85	31	74	230/460	1.4	12, 15
		56C	TENV	**VNDM3542**	1,056	SDD	11.05	37	78.5	230/460	1.4	12
1	3600	56C	TEFC	**VEDM3545**	1,426	SDD	11.97	28	77	230/460	1.6	1
	1800	56C	TEFC	**VEDM3546**	1,578	SDD	12.28	37	85.5	230/460	1.5	1
		56C	TENV	**VNEDM3546**	1,578	SDD	12.05	41	85.5	230/460	1.5	1
		143TC	TENV	**VNEDM3546T**	1,594	SDD	11.13	41	85.5	230/460	1.5	1
1 1/2	3600	56C	TEFC	**VEDM3550**	1,559	SDD	12.28	44	84	230/460	1.9	1
	1800	56C	TEFC	**VEDM3554**	1,707	SDD	13.29	42	86.5	230/460	2.2	1
		56C	TENV	**VNEDM3554**	1,707	SDD	12.93	48	86.5	230/460	2.1	1
		145TC	TENV	**VNEDM3554T**	1,723	SDD	13.00	49	86.5	230/460	2.1	1
2	3600	56C	TEFC	**VEDM3555**	1,707	SDD	13.23	41	85.5	230/460	2.5	1
		145TC	TEFC	**VEDM3555T**	1,833	SDD	13.35	41	85.5	230/460	2.5	1
	1800	56C	TEFC	**VEDM3558**	1,781	SDD	13.29	47	86.5	230/460	2.9	1
		145TC	TEFC	**VEDM3558T**	1,797	SDD	13.35	47	86.5	230/460	2.9	1
3	3450	145TC	TEFC	**VEDM3559T**	1,891	SDD	14.23	50	86.5	230/460	3.6	1
	1800	182TC	TEFC	**VEDM3611T**	1,984	SDD	16.60	86	89.5	230/460	4.2	1
5	1800	184TC	TEFC	**VEDM3615T**	2,029	SDD	18.10	91	89.5	230/460	6.7	1, 8
7 1/2	1800	213TC	TEFC	**VEDM3710T**	3,018	SDD	19.76	131	91.7	230/460	9.5	1
10	1800	215TC	TEFC	**VEDM3714T**	3,287	SDD	21.26	147	91.7	230/460	12	1, 8

(a) See notes on inside back flap.
Red catalog number indicates **NEW** product

Quarry duty motors, three phase, TEFC, Design C, high torque

2 thru 10 Hp

IP55

Features:

- High torque NEMA Design C
- Steel band frame – cast endplates and conduit box, steel fan cover
- IP55 enclosure includes: gasketed conduit box and cover, shaft seal
- Inverter ready

Applications:

- Cement
- Aggregate
- Above ground mining
- Bulk material handling
- Belt conveyors and screens

Hp	RPM	NEMA Frame	Catalog Number	List Price	Disc. Sym.	"C" Dim.	Aprx. Wt. (lb)	Full Load Efficiency	Voltage	Full Load Amps	Notes (a)
Foot mounted											
2	1800	145T	**EM3558T-9**	1,267	SDQ	13.29	45	86.5	230/460	2.9	1, 30
3	1800	182T	**EM3611T-9**	1,485	SDQ	18.04	83	89.5	230/460	4.3	1, 30
5	1800	184T	**EM3615T-9**	1,613	SDQ	18.04	95	89.5	230/460	7.1	1, 30, 35
7 1/2	1800	213T	**EM3710T-9**	2,180	SDQ	19.02	140	91.7	230/460	10.1	1, 30
10	1800	215T	**EM3714T-9**	2,537	SDQ	21.02	187	91.7	230/460	13.1	1, 30, 35

(a) See notes on inside back flap.
Cast iron frame

Crusher motors, three phase, TEFC, 460 volts and 575 volts, foot mounted

5 thru 600 Hp

IP55 **IP66**

Features:

- High torque NEMA Design A, exceeds NEMA Design C torques
- 1.25 SF up to 100 Hp, 1.15 SF over 100 Hp
- Oversized ball bearings up to 50 Hp, ball and roller bearing designs 60 Hp and up. 586/7/8 frames include oversized roller bearing on DE.
- 586/7/8 frames include oversized, insulated ODE bearing and oversized 4.375" shaft.
- IP55 for frame sizes up to L449. IP66 for 586/7/8 frames.
- 304 stainless steel nameplates
- Inverter ready nameplate
- "TR" catalog numbers are standard roller bearing

Applications:

- Cement
- Aggregate
- Above ground mining
- Bulk material handling
- Crushers, belt conveyors and screens

Hp	RPM	NEMA Frame	Catalog Number	List Price	Disc. Sym.	"C" Dim.	Aprx. Wt. (lb)	Full Load Efficiency	Voltage	Full Load Amps	Notes (a)
460 volts											
5	1800	184T	**ECR9054T**	1,160	SDC	15.93	118	89.5	230/460	7.1	12
	1200	215T	**ECR9056T**	2,002	SDC	19.50	226	89.5	230/460	7.5	12
7 1/2	1800	213T	**ECR9074T**	1,635	SDC	19.50	231	91.7	230/460	9.3	12
	1200	254T	**ECR9076T**	3,100	SDC	24.78	320	91	230/460	10.3	12
10	1800	215T	**ECR9104T**	2,004	SDC	19.50	240	91.7	230/460	12.3	12
	1200	256T	**ECR9106T**	3,601	SDC	24.78	355	91	230/460	14	12
15	1800	254T	**ECR9154T**	2,774	SDC	24.78	286	92.4	230/460	18.6	12
	1200	284T	**ECR9156T**	4,942	SDC	27.93	500	91.7	230/460	19.4	12
20	1800	256T	**ECR9204T**	3,305	SDC	24.78	366	93	230/460	24	12
	1200	286T	**ECR9206T**	5,949	SDC	27.93	535	91.7	230/460	29	12
25	1800	284T	**ECR9254T**	4,119	SDC	27.93	380	93.6	230/460	31	12
	1200	324T	**ECR9256T**	7,113	SDC	30.66	630	93	230/460	34	12
30	1800	286T	**ECR9304T**	4,844	SDC	27.93	465	93.6	230/460	37	12
	1200	326T	**ECR9306T**	7,926	SDC	30.66	680	93	230/460	42	12
40	1800	324T	**ECR9404T**	6,274	SDC	30.66	645	94.1	230/460	49	12
	1200	364T	**ECR9406TR**	14,690	SDC	33.49	918	94.1	230/460	49	5,12
50	1800	326T	**ECR9504T**	7,657	SDC	30.66	700	94.5	230/460	61	12
	1200	365T	**ECR9506TR**	17,206	SDC	33.49	930	94.1	230/460	62	5,12
	900	404T	**ECR9508TR**	16,221	SDC	38.20	1322	92.4	230/460	79.4	5,12
60	1800	364T	**ECR9604T**	14,518	SDC	33.49	977	95	230/460	70	12
		364T	**ECR9604TR**	15,415	SDC	33.49	977	95	230/460	70	5,12
	1200	404T	**ECR9606TR**	15,776	SDC	38.04	1322	94.5	230/460	70.7	5,12
	900	405T	**ECR9608TR**	18,343	SDC	38.20	1420	92.4	230/460	93.2	5,12
75	1800	365T	**ECR9754T**	16,685	SDC	33.49	962	95.4	230/460	87.5	12
		365T	**ECR9754TR**	17,582	SDC	33.49	962	95.4	230/460	87.5	5,12
	1200	405T	**ECR9756TR-4**	18,106	SDC	38.20	1422	94.5	460	91	5,12
	900	444T	**ECR9758TR-4**	22,459	SDC	44.87	1874	93.6	460	98.8	5,12
100	1800	405T	**ECR91004T-4**	17,552	SDC	38.20	1390	95.4	460	115	12
		405T	**ECR91004TR-4**	17,552	SDC	38.20	1390	95.4	460	115	5,12
	1200	444T	**ECR91006TR-4**	23,471	SDC	44.75	2029	95	460	119	5,12
	900	445T	**ECR91008TR-4**	25,045	SDC	44.75	2129	93.6	460	133	5,12
125	1800	444T	**ECR91254T-4**	22,166	SDC	44.75	1964	95.4	460	149	1
		444T	**ECR91254TR-4**	22,166	SDC	44.75	1964	95.4	460	149	1, 5
	1200	445T	**ECR91256TR-4**	26,974	SDC	44.75	1874	95.4	460	153	1, 5
	900	447T	**ECR91258TR-4**	32,408	SDC	48.24	2380	94.1	460	171	1, 5
150	1800	445T	**ECR91504T-4**	26,156	SDC	44.75	1996	95.8	460	168	1
		445T	**ECR91504TR-4**	26,156	SDC	44.75	1996	95.8	460	168	1, 5
	1200	447T	**ECR91506TR-4**	30,990	SDC	48.24	2459	95.8	460	180	1, 5
	900	449T	**ECR91508TR-4**	37,228	SDC	53.47	2648	94.5	460	203	1, 5

(a) See notes on inside back flap. Cast iron frame

Crusher motors, three phase, TEFC, 460 volts and 575 volts, foot mounted

Hp	RPM	NEMA Frame	Catalog Number	List Price	Disc. Sym.	"C" Dim.	Aprx. Wt. (lb)	Full Load Efficiency	Voltage	Full Load Amps	Notes (a)
460 volts (continued)											
200	1800	447T	**ECR92004T-4**	31,679	SDC	48.24	2455	96.2	460	225	1
		447T	**ECR92004TR-4**	31,679	SDC	48.24	2455	96.2	460	225	1, 5
	1200	449T	**ECR92006TR-4**	37,738	SDC	53.24	3125	95.8	460	277	1, 5
	900	L449T	**ECR92008TR-4**	46,839	SDC	60.22	3430	94.5	460	277	1, 5
250	1800	449T	**ECR92504T-4**	32,131	SDC	53.24	2694	96.2	460	278	
		449T	**ECR92504TR-4**	32,131	SDC	53.24	2694	96.2	460	278	
	1200	449T	**ECR92506TR-4**	43,220	SDC	53.24	3225	95.8	460	283	
		586/7TZ	**ECR582506-PPN**	43,998	ICR	65.72	4806	95.8	460	295	1, 5
	900	L449T	**ECR92508TR-4**	59,124	SDC	60.22	3390	95	460	359	
		586/7T	**ECR582508-PP**	56,184	ICR	65.72	4806	95	460	312	1, 5
300	1800	449T	**ECR93004T-4**	45,024	SDC	53.24	2888	96.2	460	336	
		449T	**ECR93004TR-4**	45,024	SDC	53.24	2888	96.2	460	336	
		586/7TZ	**ECR583004-PPN**	40,623	ICR	65.72	4718	96.2	460	343	1, 5
	1200	L449T	**ECR93006TR-4**	56,473	SDC	61.59	3683	95.8	460	381	
		586/7TZ	**ECR583006-PPN**	51,626	ICR	65.72	4806	95.8	460	352	1, 5
	900	586/7T	**ECR583008-PP**	60,954	ICR	65.72	4806	95	460	379	1, 5
350	1800	449T	**ECR93504T-4**	49,861	SDC	61.59	3027	96.2	460	390	
		449T	**ECR93504TR-4**	49,861	SDC	61.59	3027	96.2	460	390	
		586/7TZ	**ECR583504-PPN**	44,980	ICR	65.72	4718	96.2	460	396	1, 5
	1200	L449T	**ECR93506TR-4**	62,747	SDC	61.59	3683	95.8	460	433	
		586/7TZ	**ECR583506-PPN**	55,931	ICR	65.72	4806	95.8	460	407	1, 5
	900	586/7T	**ECR583508-PP**	67,192	ICR	65.72	4806	95.2	460	436	1, 5
400	1800	L449T	**ECR94004T-4**	57,979	SDC	53.24	3875	96.2	460	442	
		L449T	**ECR94004TR-4**	57,979	SDC	60.22	3875	96.2	460	442	
		586/7TZ	**ECR584004-PPN**	49,424	ICR	65.72	4718	96.2	460	452	1, 5
	1200	586/7TZ	**ECR584006-PPN**	61,589	ICR	65.72	4806	95	460	465	1, 5
450	1800	586/7TZ	**ECR584504-PPN**	56,368	ICR	65.72	4718	96.2	460	519	1, 5
	1200	586/7TZ	**ECR584506-PPN**	67,416	ICR	65.72	4806	95	460	530	1, 5
	900	587/8T	**ECR584508-PP**	77,200	ICR	75.56	5760	95	460	559	1, 5
500	1800	586/7TZ	**ECR585004-PPN**	57,707	ICR	65.72	4718	96.2	460	576	1, 5
	1200	586/7TZ	**ECR585006-PPN**	69,994	ICR	65.72	4806	95.8	460	603	1, 5
600	1800	586/7TZ	**ECR586004-PPN**	65,888	ICR	65.72	4718	96.2	460	679	1, 5
575 volts											
250	1200	586/7TZ	**ECR582506-5PPN**	43,998	ICR	65.72	4806	96.2	575	237	1, 5
300	1800	586/7TZ	**ECR583004-5PPN**	40,623	ICR	65.72	4718	96.2	575	270	1, 5
	1200	586/7TZ	**ECR583006-5PPN**	51,626	ICR	65.72	4806	95.8	575	279	1, 5
350	1800	586/7TZ	**ECR583504-5PPN**	44,980	ICR	65.72	4718	96.2	575	309	1, 5
	1200	586/7TZ	**ECR583506-5PPN**	55,931	ICR	65.72	4806	95.8	575	323	1, 5
400	1800	586/7TZ	**ECR584004-5PPN**	49,424	ICR	65.72	4718	96.2	575	362	1, 5
	1200	586/7TZ	**ECR584006-5PPN**	61,589	ICR	65.72	4806	95	575	368	1, 5
450	1800	586/7TZ	**ECR584504-5PPN**	56,368	ICR	65.72	4718	96.2	575	397	1, 5
	1200	586/7TZ	**ECR584506-5PPN**	67,416	ICR	65.72	4806	95	575	416	1, 5
500	1800	586/7TZ	**ECR585004-5PPN**	57,707	ICR	65.72	4718	96.2	575	455	1, 5
	1200	586/7TZ	**ECR585006-5PPN**	69,994	ICR	65.72	4806	95.8	575	471	1, 5
600	1800	586/7TZ	**ECR586004-5PPN**	65,888	ICR	65.72	4718	96.2	575	541	1, 5

(a) See notes on inside back flap.
Cast iron frame
Red catalog number indicates **NEW** product

NEW!

Crusher motors, three phase, TEFC, C-Face, 460 volts, foot mounted

15 thru 75 Hp

IP55

Features:

- High torque NEMA Design A, exceeds NEMA Design C torques
- 1.25 SF up to 100 Hp, 1.15 SF over 100 Hp
- IP55 ingress protection
- Oversized ball bearings up to 50 Hp
- 304 stainless steel nameplates
- Inverter ready nameplate

Applications:

- Cement
- Aggregate
- Above ground mining
- Bulk material handling
- Crushers, belt conveyors and screens

Hp	RPM	NEMA Frame	Catalog Number	List Price	Disc. Sym.	"C" Dim.	Aprx. Wt. (lb)	Full Load Efficiency	Voltage	Full Load Amps	Notes (a)
C-Face											
15	1800	254TC	**CECR9154T**	3,611	SDC	25.28	286	92.4	230/460	18.6	12
20	1800	256TC	**CECR9204T**	4,142	SDC	25.28	325	93	230/460	24	12
25	1800	284TC	**CECR9254T**	5,230	SDC	27.93	465	93.6	230/460	31	12
30	1800	286TC	**CECR9304T**	5,955	SDC	27.93	465	93.6	230/460	37	12
40	1800	324TC	**CECR9404T**	7,555	SDC	30.16	650	94.1	230/460	49	12
50	1800	326TC	**CECR9504T**	8,939	SDC	30.16	700	94.5	230/460	61	12
60	1800	364TC	**CECR9604T**	12,164	SDC	33.48	977	95	230/460	70	12
75	1800	365TC	**CECR9754T**	14,465	SDC	33.48	982	95.4	230/460	87.5	12

(a) See notes on inside back flap.
Cast iron frame
Red catalog number indicates **NEW** product

Crusher duty conversion base

Applications:

Designed to meet the needs of the aggregate & mining industry where the installed base of motors includes similar rating in both 449T and 586/587 frames. This conversion base kit will allow a customer to mount any Baldor-Reliance® NEMA 449T frame into an existing NEMA 586/587 application.

Features:

- Left and right hand pieces marked for easy identification
- Compensates for height, position & mounting hole locations

Conversion base kit CB5844T with ECR93504TR-4

Catalog Number	Converts From	Converts. To.	List Price	Disc. Sym.	Aprx. Wt. (lb)	Height (in.)	Width (in.)	Length (in.)
CB5844T	449T	586T/587T	9,257	SVC	465	3.5	6.5	35.75
CB5049T	449T	505US	3,960	SVC	328	1.5	4.5	28.00
CB50549T	449T	504U/505U	4,452	SVC	328	1.5	4.5	28.00

For a complete listing of available conversion bases, please see the Motor Accessories section.

Division 2 capabilities

The following list of Severe duty motors are marked for Division 2, Class I, Groups A, B, C, D for Sine Wave and Inverter Power. They also include Equivalent Zone markings for Class I, Zone 2, Groups IIA, IIB, IIC for Sine Wave and Inverter Power.

Division 2 Temp Codes are provided in the standard format per the NEC Article 500 requirements. Equivalent Zone Temp Codes are provided in the "T = °C" format because NEC Article 505 does not allow all T Codes permitted by NEC 500. Inverter Temp Codes are provided in the "T = °C" format because they apply to both the Equivalent Zone (NEC 505) requirements and NEC 500 requirements. Please reference the following table for Temperature and Temp Code values.

Maximum Surface Temperature	US (NEC 500) CA (CEC Annex J)	US (NEC 505) CA (CEC Section 18)
450° C	T1	T1
300° C	T2	T2
280° C	T2A	–
260° C	T2B	–
230° C	T2C	–
215° C	T2D	–
200° C	T3	T3

Maximum Surface Temperature	US (NEC 500) CA (CEC Annex J)	US (NEC 505) CA (CEC Section 18)
180° C	T3A	–
165° C	T3B	–
160° C	T3C	–
135° C	T4	T4
120° C	T4A	–
100° C	T5	T5
85° C	T6	T6

Catalog Number	Sine Wave, 1.15 S.F.			Inverter Power, 1.0 S.F.		
	Sine Wave Temp Code	Equivalent Zone Temp Code T = °C	Inverter Temp Code T = °C	V.T. Speed Range (Hz)*	C.T. Speed Range (Hz)*	CHP Speed Range (Hz)
CECP2276T	T3C	160°C	180°C	0-60	0-60	60-90
CECP2294T	T3C	160°C	180°C	3-60	6-60	60-90
CECP2332T	T3C	160°C	180°C	0-60	0-60	60-90
CECP2333T (-4)	T3C	160°C	180°C	0-60	0-60	60-90
CECP2334T (-4)	T3C	160°C	180°C	0-60	0-60	60-90
CECP3581T	T4	135°C	135°C	0-60	0-60	60-90
CECP3582T	T4	135°C	135°C	0-60	0-60	60-90
CECP3584T	T4	135°C	135°C	0-60	0-60	60-90
CECP3587T	T4	135°C	135°C	0-60	0-60	60-90
CECP3660T	T3C	160°C	160°C	3-60	6-60	60-90
CECP3661T	T3C	160°C	160°C	0-60	0-60	60-90
CECP3663T	T3C	160°C	160°C	3-60	6-60	60-90
CECP3664T	T3C	160°C	160°C	0-60	0-60	60-90
CECP3665T	T3C	160°C	160°C	0-60	0-60	60-90
CECP3667T	T3C	160°C	160°C	0-60	0-60	60-90
CECP3764T	T3C	160°C	160°C	0-60	0-60	60-90
CECP3768T	T3C	160°C	160°C	0-60	0-60	60-90
CECP3769T	T3C	160°C	160°C	3-60	6-60	60-90
CECP3770T	T3C	160°C	160°C	0-60	0-60	60-90
CECP3771T	T3C	160°C	160°C	3-60	6-60	60-90
CECP3774T	T3A	180°C	160°C	0-60	0-60	60-90
CECP4100T	T3C	160°C	180°C	0-60	0-60	60-90
CECP4102T	T3C	160°C	180°C	0-60	0-60	60-90
CECP4103T (-4)	T3C	160°C	180°C	0-60	0-60	60-90
CECP4104T (-4)	T3C	160°C	180°C	0-60	0-60	60-90
CECP4106T	T3	200°C	200°C	0-60	6-60	60-90
CECP4107T	T3	200°C	200°C	3-60	6-60	60-90
CECP4108T	T3	200°C	200°C	3-60	6-60	60-90
CECP4109T	T3	200°C	200°C	3-60	6-60	60-90
CECP4110T	T3	200°C	200°C	0-60	0-60	60-90
CECP4111T	T3	200°C	200°C	0-60	0-60	60-90
CECP4114T	T3	200°C	200°C	3-60	6-60	60-90
CECP4115T	T3	200°C	200°C	0-60	0-60	60-90
CECP4117T	T3	200°C	200°C	0-60	0-60	60-90
CECP4308T	T3A	180°C	180°C	0-60	6-60	60-90
CECP4310T	T3	200°C	200°C	0-60	6-60	60-75
CECP4312T	T3	200°C	200°C	3-60	15-60	60-90
CECP4313T	T3	200°C	200°C	0-60	10-60	60-75
CECP4314T (-4) (-5)	T3	200°C	200°C	0-60	10-60	60-90

Catalog Number	Sine Wave, 1.15 S.F.			Inverter Power, 1.0 S.F.		
	Sine Wave Temp Code	Equivalent Zone Temp Code T = °C	Inverter Temp Code T = °C	V.T. Speed Range (Hz)*	C.T. Speed Range (Hz)*	CHP Speed Range (Hz)
CECP4316T	T3	200°C	200°C	0-60	15-60	60-90
CECP4400T-4	T2D	215°C	215°C	0-60	10-60	60-90
CECP4402T-4	T3	200°C	200°C	0-60	6-60	60-75
CECP4406T-4	T3	200°C	200°C	0-60	15-60	60-90
CECP4407T-4	T3	200°C	200°C	0-60	30-60	60-90
CECP4410T-4	T3	200°C	200°C	0-60	30-60	60-90
CECP82276T-4	T3C	160°C	180°C	0-60	0-60	60-90
CECP82332T-4	T3C	160°C	180°C	0-60	0-60	60-90
CECP82333T-4 (-5)	T3C	160°C	180°C	0-60	0-60	60-90
CECP82334T-4 (-5)	T3C	160°C	180°C	0-60	0-60	60-90
CECP82394T-4	T3C	160°C	180°C	3-60	6-60	60-90
CECP83580T-4	T4	135°C	135°C	3-60	6-60	60-90
CECP83581T-4 (-5)	T4	135°C	135°C	0-60	0-60	60-90
CECP83582T-4	T4	135°C	135°C	0-60	0-60	60-90
CECP83583T-4	T4	135°C	135°C	3-60	6-60	60-90
CECP83584T-4	T4	135°C	135°C	0-60	0-60	60-90
CECP83586T-4	T4	135°C	135°C	3-60	6-60	60-90
CECP83587T-4 (-5)	T4	135°C	135°C	0-60	0-60	60-90
CECP83660T-4	T3C	160°C	160°C	3-60	6-60	60-90
CECP83661T-4 (-5)	T3C	160°C	160°C	0-60	0-60	60-90
CECP83663T-4	T3C	160°C	160°C	3-60	6-60	60-90
CECP83664T-4	T3C	160°C	160°C	0-60	0-60	60-90
CECP83665T-4 (-5)	T3C	160°C	160°C	0-60	0-60	60-90
CECP83667T-4	T3C	160°C	160°C	0-60	0-60	60-90
CECP83764T-4	T3C	160°C	160°C	0-60	0-60	60-90
CECP83768T-4	T3C	160°C	160°C	0-60	0-60	60-90
CECP83769T-4	T3C	160°C	160°C	3-60	6-60	60-90
CECP83770T-4 (-5)	T3C	160°C	160°C	0-60	0-60	60-90
CECP83771T-4	T3C	160°C	160°C	3-60	6-60	60-90
CECP83774T-4	T3C	160°C	160°C	0-60	0-60	60-90
CECP83774T-5	T3C	160°C	160°C	0-60	0-60	60-90
CECP84100T-4	T3C	160°C	180°C	0-60	0-60	60-90
CECP84102T-4	T3C	160°C	180°C	0-60	0-60	60-90
CECP84103T-4 (-5)	T3C	160°C	180°C	0-60	0-60	60-90
CECP84104T-4 (-5)	T3C	160°C	180°C	0-60	0-60	60-90
CECP84106T-4	T3	200°C	200°C	3-60	6-60	60-90
CECP84107T-4	T3	200°C	200°C	3-60	6-60	60-90
CECP84108T-4	T3	200°C	200°C	3-60	6-60	60-90
CECP84109T-4	T3	200°C	200°C	3-60	6-60	60-90

* 0 Hz = motor slip Hz (1) Not suitable for Division 2 applications **(-4)** 460 volt version **(-5)** 575 volt version

Division 2 capabilities (continued)

Catalog Number	Sine Wave Temp Code	Sine Wave, 1.15 S.F. Equivalent Zone Temp Code T = °C	Inverter Temp Code T = °C	Inverter Power, 1.0 S.F. V.T. Speed Range (Hz)*	C.T. Speed Range (Hz)*	CHP Speed Range (Hz)
CECP84110T-4	T3	200°C	200°C	0-60	0-60	60-90
CECP84110T-5	T3	200°C	200°C	0-60	0-60	60-90
CECP84111T-4	T3	200°C	200°C	0-60	0-60	60-90
CECP84114T-4	T3	200°C	200°C	3-60	6-60	60-90
CECP84115T-4	T3	200°C	200°C	0-60	0-60	60-90
CECP84115T-5	T3	200°C	200°C	0-60	0-60	60-90
CECP84117T-4	T3	200°C	200°C	0-60	0-60	60-90
CECP84308T-4	T3A	180°C	180°C	0-60	6-60	60-90
CECP84310T-4	T3	200°C	200°C	0-60	6-60	60-75
CECP84312T-4	T3A	180°C	180°C	0-60	6-60	60-90
CECP84313T-4	T3	200°C	200°C	0-60	15-60	60-75
CECP84314T-4	T3	200°C	200°C	0-60	10-60	60-90
CECP84316T-4	T3	200°C	200°C	0-60	15-60	60-90
CENCP83580T-4	T3C	160°C	160°C	3-60	6-60	60-90
CENCP83581T-4	T4	135°C	135°C	0-60	0-60	60-90
CXT3074T (-5)	T3C	160°C	180°C	3-60	3-60	60-90
CXT30152T (-5)	T4	135°C	135°C	6-60	6-60	60-90
CXT30154T (-5)	T4	135°C	135°C	3-60	3-60	60-90
CXT30156T (-5)	T3C	160°C	160°C	3-60	3-60	60-90
CXT3012T (-5)	T4	135°C	135°C	6-60	6-60	60-90
CXT3014T (-5)	T4	135°C	135°C	3-60	3-60	60-90
CXT3016T (-5)	T4	135°C	135°C	3-60	3-60	60-90
CXT3022T (-5)	T4	135°C	135°C	6-60	6-60	60-90
CXT3024T (-5)	T4	135°C	135°C	3-60	3-60	60-90
CXT3026T (-5)	T3C	160°C	160°C	3-60	3-60	60-90
CXT3032T (-5)	T3C	160°C	160°C	6-60	6-60	60-90
CXT3032T-140	(1)	(1)	(1)	6-60	6-60	60-90
CXT3034T (-5)	T3C	160°C	160°C	3-60	3-60	60-90
CXT3036T (-5)	T3C	160°C	160°C	3-60	3-60	60-90
CXT3052T (-5)	T3C	160°C	160°C	3-60	3-60	60-90
CXT3054T (-5)	T3C	160°C	160°C	3-60	3-60	60-90
CXT3056T (-5)	T3C	160°C	160°C	3-60	3-60	60-90
CXT3072T (-5)	T3C	160°C	160°C	6-60	6-60	60-90
CXT3072T-180	(1)	(1)	(1)	6-60	6-60	60-90
CXT3076T (-5)	T3A	180°C	180°C	3-60	3-60	60-90
CXT31002TS (-5)	T3	200°C	200°C	0-60	6-60	60-75
CXT31004T-4 (-5)	T2D	215°C	215°C	0-60	10-60	60-90
CXT3102T (-5)	T3C	160°C	160°C	6-60	6-60	60-90
CXT3104T (-5)	T3C	180°C	180°C	3-60	3-60	60-90
CXT3106T (-5)	T3A	180°C	180°C	3-60	3-60	60-90
CXT31254T-4 (-5)	T3	200°C	200°C	0-60	10-60	60-90
CXT31504T-4 (-5)	T3	200°C	200°C	0-60	15-60	60-90
CXT3152T (-5)	T3A	180°C	180°C	3-60	6-60	60-90
CXT3152T-210	(1)	(1)	(1)	15-60	15-60	60-90
CXT3154T (-5)	T3A	180°C	180°C	3-60	3-60	60-90
CXT3156T (-5)	T3A	180°C	180°C	3-60	3-60	60-90
CXT32004T-4	T3	200°C	200°C	0-60	30-60	60-90
CXT3202T (-5)	T3	200°C	200°C	6-60	6-60	60-90
CXT3204T (-5)	T3A	180°C	180°C	3-60	3-60	60-90
CXT3206T (-5)	T3	200°C	200°C	3-60	3-60	60-90
CXT32504T-4 (-5)	T3	200°C	200°C	0-60	30-60	60-90
CXT3252T-250	(1)	(1)	(1)	6-60	6-60	60-90
CXT3252TS (-5)	T3	200°C	200°C	6-60	6-60	60-90
CXT3254T (-5)	T3A	180°C	180°C	0-60	1-60	60-90
CXT3256T (-5)	T3	200°C	200°C	3-60	3-60	60-90
CXT33004T-4 (-5)	T2C	230°C	230°C	0-60	30-60	60-90
CXT3302TS (-5)	T3	200°C	200°C	6-60	6-60	60-90
CXT3304T (-5)	T3	200°C	200°C	3-60	3-60	60-90
CXT3306T (-5)	T3	200°C	200°C	3-60	3-60	60-90
CXT3402TS (-5)	T3	200°C	200°C	6-60	6-60	60-90

Catalog Number	Sine Wave Temp Code	Sine Wave, 1.15 S.F. Equivalent Zone Temp Code T = °C	Inverter Temp Code T = °C	Inverter Power, 1.0 S.F. V.T. Speed Range (Hz)*	C.T. Speed Range (Hz)*	CHP Speed Range (Hz)
CXT3404T (-5)	T3	200°C	200°C	0-60	.8-60	60-90
CXT3406T (-5)	T3A	180°C	180°C	0-60	6-60	60-90
CXT3502TS (-5)	T3	200°C	200°C	6-60	6-60	60-90
CXT3504T (-5)	T3	200°C	200°C	3-60	3-60	60-90
CXT3506T (-5)	T3A	180°C	180°C	0-60	6-60	60-90
CXT3602TS (-5)	T3	200°C	200°C	0-60	6-60	60-75
CXT3604T (-5)	T3	200°C	200°C	0-60	10-60	60-90
CXT3752TS (-5)	T3	200°C	200°C	0-60	10-60	60-75
CXT3754T (-5)	T3	200°C	200°C	0-60	30-60	60-90
ECP2276T (-4) (-5)	T3C	160°C	180°C	0-60	0-60	60-90
ECP2280T-4	T3C	160°C	180°C	0-60	0-60	60-90
ECP2294T	T3C	160°C	180°C	3-60	6-60	60-90
ECP2332T (-4) (-5)	T3C	160°C	180°C	0-60	0-60	60-90
ECP2333T (-4) (-5)	T3C	160°C	180°C	0-60	0-60	60-90
ECP2334T (-4) (-5)	T3C	160°C	180°C	0-60	0-60	60-90
ECP2394T-4 (-5)	T3C	160°C	180°C	3-60	6-60	60-90
ECP2395T-4	T3	200°C	200°C	3-60	0-60	60-90
ECP2401T-4	T3C	160°C	180°C	0-60	0-60	60-90
ECP2402T-4	T3	200°C	200°C	3-60	0-60	60-90
ECP3580T (-4) (-5)	T4	135°C	135°C	3-60	6-60	60-90
ECP3581T (-4) (-5)	T4	135°C	135°C	0-60	0-60	60-90
ECP3582T (-4)	T4	135°C	135°C	0-60	0-60	60-90
ECP3583T (-4)	T4	135°C	135°C	3-60	6-60	60-90
ECP3584T (-4) (-5)	T4	135°C	135°C	0-60	0-60	60-90
ECP3586T (-4)	T4	135°C	135°C	3-60	6-60	60-90
ECP3587T (-4) (-5)	T4	135°C	135°C	0-60	0-60	60-90
ECP3660T (-4) (-5)	T3C	160°C	160°C	3-60	6-60	60-90
ECP3661T (-4) (-5)	T3C	160°C	160°C	0-60	0-60	60-90
ECP3663T (-4) (-5)	T3C	160°C	160°C	3-60	6-60	60-90
ECP3664T (-4)	T3C	160°C	160°C	0-60	0-60	60-90
ECP3665T (-4) (-5)	T3C	160°C	160°C	0-60	0-60	60-90
ECP3667T (-4)	T3C	160°C	160°C	0-60	0-60	60-90
ECP3668T-4	T3C	160°C	160°C	0-60	3-60	60-90
ECP3687T-4	T3C	160°C	160°C	0-60	3-60	60-90
ECP3764T (-4) (-5)	T3C	160°C	160°C	0-60	0-60	60-90
ECP3768T (-4) (-5)	T3C	160°C	160°C	0-60	0-60	60-90
ECP3769T (-4) (-5)	T3C	160°C	160°C	3-60	6-60	60-90
ECP3770T (-4) (-5)	T3C	160°C	160°C	0-60	0-60	60-90
ECP3771T (-4) (-5)	T3C	160°C	160°C	3-60	6-60	60-90
ECP3772T-4	T3C	160°C	160°C	0-60	0-60	60-90
ECP3774T (-4) (-5)	T3C	160°C	160°C	0-60	0-60	60-90
ECP3775T-4	T3C	160°C	160°C	0-60	0-60	60-90
ECP4100T (-4) (-5)	T3C	160°C	180°C	0-60	0-60	60-90
ECP4102T (-4) (-5)	T3C	160°C	180°C	0-60	0-60	60-90
ECP4103T (-4) (-5)	T3C	160°C	180°C	0-60	0-60	60-90
ECP4104T (-4) (-5)	T3C	160°C	180°C	0-60	0-60	60-90
ECP4106T (-4) (-5)	T3	200°C	200°C	3-60	6-60	60-90
ECP4107T (-4)	T3	200°C	200°C	3-60	6-60	60-90
ECP4108T (-4)	T3	200°C	200°C	3-60	6-60	60-90
ECP4109T (-4)	T3	200°C	200°C	3-60	6-60	60-90
ECP4110T (-4) (-5)	T3	200°C	200°C	0-60	0-60	60-90
ECP4111T (-4) (-5)	T3	200°C	200°C	0-60	0-60	60-90
ECP4112T-4	T3	200°C	200°C	3-60	6-60	60-90
ECP4113T-4	T3	200°C	200°C	0-60	6-60	60-90
ECP4114T (-4)	T3	200°C	200°C	3-60	6-60	60-90
ECP4115T (-4) (-5)	T3	200°C	200°C	0-60	0-60	60-90
ECP4117T (-4) (-5)	T3	200°C	200°C	0-60	0-60	60-90
ECP4124T-4	T3	200°C	200°C	3-60	6-60	60-90
ECP4308T (-4) (-5)	T3A	180°C	180°C	0-60	6-60	60-90
ECP4310T (-4)	T3	200°C	200°C	0-60	6-60	60-75

* 0 Hz = motor slip Hz (1) Not suitable for Division 2 applications **(-4)** 460 volt version **(-5)** 575 volt version

Division 2 capabilities (continued)

Catalog Number	Sine Wave Temp Code	Sine Wave, 1.15 S.F. Equivalent Zone Temp Code T = °C	Inverter Temp Code T = °C	Inverter Power, 1.0 S.F. V.T. Speed Range (Hz)*	C.T. Speed Range (Hz)*	CHP Speed Range (Hz)
ECP4312T (-4)	T3	200°C	200°C	3-60	15-60	60-90
ECP4313T (-4) (-5)	T3	200°C	200°C	0-60	10-60	60-75
ECP4314T (-4) (-5)	T3	200°C	200°C	0-60	10-60	60-90
ECP4315T-4	T3C	160°C	180°C	0-60	6-60	60-90
ECP4316T (-4) (-5)	T3	200°C	200°C	0-60	30-60	60-90
ECP4316TR-4	T3	200°C	200°C	0-60	30-60	60-90
ECP4400T-4 (-5)	T2D	215°C	215°C	0-60	10-60	60-90
ECP4400TR-4	T2D	215°C	215°C	0-60	10-60	60-90
ECP4400TS-4	T2D	215°C	215°C	0-60	10-60	60-90
ECP4402T (-4)	T3	200°C	200°C	0-60	6-60	60-75
ECP4403T (-4)	T3A	180°C	180°C	0-60	6-60	60-90
ECP4403TR-4	T3	200°C	200°C	0-60	10-60	60-90
ECP4404T (-4) (-5)	T3	200°C	200°C	0-60	10-60	60-90
ECP4404TR-4	T3	200°C	200°C	0-60	10-60	60-90
ECP4406T-4 (-5)	T3	200°C	200°C	0-60	15-60	60-90
ECP4406TR-4	T3	200°C	200°C	0-60	15-60	60-90
ECP4407T-4 (-5)	T3	200°C	200°C	0-60	30-60	60-90
ECP4407TR-4	T3	200°C	200°C	0-60	30-60	60-90
ECP4407TS-4	T3	200°C	200°C	0-60	30-60	60-90
ECP4408T-4	T3	200°C	200°C	0-60	30-60	60-90
ECP4408TR-4	T3	200°C	200°C	0-60	30-60	60-90
ECP4409T-4	T3	200°C	200°C	0-60	15-60	60-90
ECP4409TR-4	T3	200°C	200°C	0-60	15-60	60-90
ECP4410T-4 (-5)	T3	200°C	200°C	0-60	10-60	60-90
ECP4410TR-4	T3	200°C	200°C	0-60	10-60	60-90
ECP4411T-4 (-5)	T3	200°C	200°C	0-60	15-60	60-90
ECP4411TR-4	T3	200°C	200°C	0-60	15-60	60-90
ECP4412T (-4)	T3	200°C	200°C	0-60	15-60	60-75
ECP4413T-4	T3	200°C	200°C	0-60	10-60	60-75
ECP44156T-4	T3	200°C	200°C	0-60	15-60	60-90
ECP44156TR-4	T3	200°C	200°C	0-60	15-60	60-90
ECP4416T-4	T3	200°C	200°C	0-60	30-60	60-75
ECP4417T-4	T3C	160°C	200°C	3-60	6-60	60-90
ECP4418T-4	T3A	180°C	180°C	0-60	6-60	60-90
ECP4419T-4	T3	200°C	200°C	0-60	10-60	60-90
ECP44206T-4	T3	200°C	200°C	0-60	30-60	60-90
ECP44206TR-4	T3	200°C	200°C	0-60	30-60	60-90
ECP4420T-4	T3	200°C	200°C	0-60	15-60	60-90
ECP4421T-4	T3	200°C	200°C	0-60	30-60	60-90
ECP4422T-4	T3	200°C	200°C	0-60	15-60	60-90
ECP4423T-4	T2C	230°C	230°C	0-60	30-60	60-90
ECP44252T-4	T2C	230°C	230°C	0-60	30-60	60-75
ECP44256T-4	T2C	230°C	230°C	0-60	30-60	60-90
ECP44256TR-4	T2C	230°C	230°C	0-60	30-60	60-90
ECP44302T-4	T2C	230°C	230°C	0-60	30-60	60-75
ECP44304T-4	T2C	230°C	230°C	0-60	30-60	60-90
ECP44304TR-4	T2C	230°C	230°C	0-60	30-60	60-90
ECP44352T-4	T2C	230°C	230°C	0-60	30-60	60-75
ECP44402T-4	T2C	230°C	230°C	0-60	30-60	60-75
ECP49306T-4	T2C	230°C	230°C	0-60	30-60	60-90
ECP49308T-4	T2A	280°C	280°C	6-60	30-60	60-75
ECP49258T-4	T2C	230°C	260°C	6-60	30-60	60-90
ECP49354T-4	T2C	230°C	230°C	0-60	30-60	60-90
ECP49404T-4	T2C	230°C	230°C	0-60	30-60	60-90
ECP62333TR-4	T3C	160°C	180°C	0-60	0-60	60-90
ECP62334TR-4	T3C	160°C	180°C	0-60	0-60	60-90
ECP63665T-4	T3C	160°C	160°C	0-60	0-60	60-90
ECP63770TR-4	T3C	160°C	160°C	0-60	0-60	60-90
ECP63774TR-4	T3C	160°C	160°C	0-60	0-60	60-90
ECP64103TR-4	T3C	160°C	180°C	0-60	0-60	60-90
ECP64104TR-4	T3C	160°C	180°C	0-60	0-60	60-90
ECP64110TR-4	T3	200°C	200°C	0-60	0-60	60-90
ECP64115TR-4	T3	200°C	200°C	0-60	0-60	60-90
ECP64314TR-4	T3	200°C	200°C	0-60	10-60	60-90
ECP64316TR-4	T3	200°C	200°C	0-60	15-60	60-90
ECP82276T-4 (-5)	T3C	160°C	180°C	0-60	0-60	60-90
ECP82332T-4 (-5)	T3C	160°C	180°C	0-60	0-60	60-90
ECP82333T-4 (-5)	T3C	160°C	180°C	0-60	0-60	60-90
ECP82334T-4 (-5)	T3C	160°C	180°C	0-60	0-60	60-90
ECP82394T-4 (-5)	T3C	160°C	180°C	3-60	6-60	60-90
ECP83580T-4 (-5)	T4	135°C	135°C	3-60	6-60	60-90
ECP83581T-4 (-5)	T4	135°C	135°C	0-60	0-60	60-90
ECP83582T-4 (-5)	T4	135°C	135°C	0-60	0-60	60-90
ECP83583T-4 (-5)	T4	135°C	135°C	3-60	6-60	60-90
ECP83584T-4 (-5)	T4	135°C	135°C	0-60	0-60	60-90
ECP83586T-4 (-5)	T4	135°C	135°C	3-60	6-60	60-90
ECP83587T-4 (-5)	T4	135°C	135°C	0-60	0-60	60-90
ECP83660T-4 (-5)	T3C	160°C	160°C	3-60	6-60	60-90
ECP83661T-4 (-5)	T3C	160°C	160°C	0-60	0-60	60-90
ECP83663T-4 (-5)	T3C	160°C	160°C	3-60	6-60	60-90
ECP83664T-4 (-5)	T3C	160°C	160°C	0-60	0-60	60-90
ECP83665T-4 (-5)	T3A	180°C	160°C	0-60	0-60	60-90
ECP83667T-4 (-5)	T3C	160°C	160°C	0-60	0-60	60-90
ECP83764T-4 (-5)	T3C	160°C	160°C	0-60	0-60	60-90
ECP83768T-4 (-5)	T3C	160°C	160°C	0-60	0-60	60-90
ECP83769T-4 (-5)	T3C	160°C	160°C	3-60	6-60	60-90
ECP83770T-4 (-5)	T3C	160°C	160°C	0-60	0-60	60-90
ECP83771T-4 (-5)	T3C	160°C	160°C	3-60	6-60	60-90
ECP83774T-4 (-5)	T3C	160°C	160°C	0-60	0-60	60-90
ECP84100T-4 (-5)	T3C	160°C	180°C	0-60	0-60	60-90
ECP84102T-4 (-5)	T3C	160°C	180°C	0-60	0-60	60-90
ECP84103T-4 (-5)	T3C	160°C	180°C	0-60	0-60	60-90
ECP84104T-4 (-5)	T3C	160°C	180°C	0-60	0-60	60-90
ECP84106T-4 (-5)	T3	200°C	200°C	3-60	6-60	60-90
ECP84107T-4 (-5)	T3	200°C	200°C	3-60	6-60	60-90
ECP84108T-4 (-5)	T3	200°C	200°C	3-60	6-60	60-90
ECP84109T-4 (-5)	T3	200°C	200°C	3-60	6-60	60-90
ECP84110T-4 (-5)	T3	200°C	200°C	0-60	0-60	60-90
ECP84111T-4 (-5)	T3	200°C	200°C	0-60	0-60	60-90
ECP84114T-4 (-5)	T3	200°C	200°C	3-60	6-60	60-90
ECP84115T-4 (-5)	T3	200°C	200°C	0-60	0-60	60-90
ECP84117T-4 (-5)	T3	200°C	200°C	0-60	0-60	60-90
ECP84308T-4 (-5)	T3A	180°C	180°C	0-60	6-60	60-90
ECP84310T-4 (-5)	T3	200°C	200°C	0-60	6-60	60-75
ECP84312T-4 (-5)	T3	200°C	200°C	0-60	6-60	60-90
ECP84313T-4 (-5)	T3	200°C	200°C	0-60	15-60	60-75
ECP84314T-4 (-5)	T3	200°C	200°C	0-60	10-60	60-90
ECP84316T-4 (-5)	T3	200°C	200°C	0-60	15-60	60-90
ECP84400T-4 (-5)	T2D	215°C	215°C	0-60	10-60	60-90
ECP84400TR-4	T2D	215°C	215°C	0-60	10-60	60-90
ECP84402T-4 (-5)	T3	200°C	200°C	0-60	10-60	60-75
ECP84403T-4 (-5)	T3	200°C	200°C	0-60	10-60	60-90
ECP84404T-4 (-5)	T3	200°C	200°C	0-60	10-60	60-90
ECP84406T-4 (-5)	T3	200°C	200°C	0-60	15-60	60-90
ECP84406TR-4	T3	200°C	200°C	0-60	15-60	60-90
ECP84407T-4 (-5)	T3	200°C	200°C	0-60	30-60	60-90
ECP84407TR-4 (-5)	T3	200°C	200°C	0-60	30-60	60-90
ECP84408T-4 (-5)	T3	200°C	200°C	0-60	30-60	60-90
ECP84408TR-4 (-5)	T3	200°C	200°C	0-60	30-60	60-90
ECP84409T-4 (-5)	T3	200°C	200°C	0-60	15-60	60-90

* 0 Hz = motor slip Hz (1) Not suitable for Division 2 applications **(-4)** 460 volt version **(-5)** 575 volt version

Division 2 capabilities (continued)

Catalog Number	Sine Wave Temp Code	Sine Wave, 1.15 S.F. Equivalent Zone Temp Code T = °C	Inverter Temp Code T = °C	Inverter Power, 1.0 S.F. V.T. Speed Range (Hz)*	C.T. Speed Range (Hz)*	CHP Speed Range (Hz)
ECP84409TR-4	T3	200°C	200°C	0-60	15-60	60-90
ECP84410T-4 (-5)	T3	200°C	200°C	0-60	10-60	60-90
ECP84410TR-4	T3	200°C	200°C	0-60	10-60	60-90
ECP84411T-4 (-5)	T3	200°C	200°C	0-60	15-60	60-90
ECP84411TR-4	T3	200°C	200°C	0-60	15-60	60-90
ECP84412T-4 (-5)	T3	200°C	200°C	0-60	15-60	60-75
ECP84413T-4 (-5)	T3	200°C	200°C	0-60	10-60	60-75
ECP844156T-4	T3	200°C	200°C	0-60	15-60	60-90
ECP844156TR-4 (-5)	T3	200°C	200°C	0-60	15-60	60-90
ECP84416T-4 (-5)	T3	200°C	200°C	0-60	30-60	60-75
ECP844206T-4	T3	200°C	200°C	0-60	30-60	60-90
ECP844206TR-4 (-5)	T3	200°C	200°C	0-60	30-60	60-90
ECP844252T-4 (-5)	T2D	215°C	215°C	0-60	30-60	60-75
ECP844256T-4	T2D	215°C	215°C	0-60	30-60	60-90
ECP844256TR-4 (-5)	T2D	215°C	215°C	0-60	30-60	60-90
ECP844306T-4	T2C	230°C	230°C	0-60	30-60	60-90
ECP844306TR-4 (-5)	T2C	230°C	230°C	0-60	30-60	60-90
ENCP3580T-4	T3C	160°C	160°C	3-60	6-60	60-90
ENCP3581T-4	T4	135°C	135°C	0-60	0-60	60-90
ENCP83580T-4	T3C	160°C	160°C	3-60	6-60	60-90
ENCP83581T-4	T4	135°C	135°C	0-60	0-60	60-90
VECP2276T	T3C	160°C	180°C	0-60	0-60	60-90
VECP2332T	T3C	160°C	180°C	0-60	0-60	60-90
VECP2333T (-4)	T3C	160°C	180°C	0-60	0-60	60-90
VECP2334T (-4)	T3C	160°C	180°C	0-60	0-60	60-90
VECP3580-4	T4	135°C	135°C	3-60	6-60	60-90
VECP3581 (-4)	T4	135°C	135°C	0-60	0-60	60-90
VECP3581T (-4)	T4	135°C	135°C	0-60	0-60	60-90
VECP3582T (-4)	T4	135°C	135°C	0-60	0-60	60-90
VECP3584T (-4)	T4	135°C	135°C	0-60	0-60	60-90
VECP3586T-4	T4	135°C	135°C	3-60	6-60	60-90
VECP3587T (-4)	T4	135°C	135°C	0-60	0-60	60-90
VECP3660T-4	T3C	160°C	160°C	0-60	6-60	60-90
VECP3661T (-4)	T3C	160°C	160°C	0-60	0-60	60-90
VECP3663T-4	T3C	160°C	160°C	3-60	6-60	60-90
VECP3664T	T3C	160°C	160°C	0-60	0-60	60-90
VECP3665T (-4)	T3C	160°C	160°C	0-60	0-60	60-90
VECP3667T	T3C	160°C	160°C	0-60	0-60	60-90
VECP3764T	T3C	160°C	160°C	0-60	0-60	60-90
VECP3768T	T3C	160°C	160°C	0-60	0-60	60-90
VECP3769T-4	T3C	160°C	160°C	3-60	6-60	60-90
VECP3770T (-4)	T3C	160°C	160°C	0-60	0-60	60-90
VECP3771T-4	T3C	160°C	160°C	3-60	6-60	60-90
VECP3774T (-4)	T3C	160°C	160°C	0-60	0-60	60-90
VECP4100T	T3C	160°C	180°C	0-60	0-60	60-90
VECP4102T	T3C	160°C	180°C	0-60	0-60	60-90
VECP4103T	T3C	160°C	180°C	0-60	0-60	60-90
VECP4111T	T3	200°C	200°C	0-60	0-60	60-90
VECP82333T-4	T3C	160°C	180°C	0-60	0-60	60-90
VECP82334T-4	T3C	160°C	180°C	0-60	0-60	60-90
VECP82394T-4	T3C	160°C	180°C	0-60	6-60	60-90
VECP83583T-4	T4	135°C	135°C	3-60	6-60	60-90
VECP83584T-4	T4	135°C	135°C	0-60	0-60	60-90
VECP83586T-4	T4	135°C	135°C	3-60	6-60	60-90
VECP83587T-4	T4	135°C	135°C	0-60	0-60	60-90
VECP83660T-4	T3C	160°C	160°C	3-60	6-60	60-90
VECP83661T-4	T3C	160°C	160°C	0-60	0-60	60-90
VECP83663T-4	T3C	160°C	160°C	3-60	6-60	60-90
VECP83665T-4	T3C	160°C	160°C	0-60	0-60	60-90
VECP83769T-4	T3C	160°C	160°C	3-60	6-60	60-90

Catalog Number	Sine Wave Temp Code	Sine Wave, 1.15 S.F. Equivalent Zone Temp Code T = °C	Inverter Temp Code T = °C	Inverter Power, 1.0 S.F. V.T. Speed Range (Hz)*	C.T. Speed Range (Hz)*	CHP Speed Range (Hz)
VECP83770T-4	T3C	160°C	160°C	0-60	0-60	60-90
VECP83771T-4	T3C	160°C	160°C	3-60	6-60	60-90
VECP83774T-4	T3C	160°C	160°C	0-60	0-60	60-90
VECP84106T-4	T3	200°C	200°C	3-60	6-60	60-90
VENCP83580T-4	T3C	160°C	160°C	3-60	6-60	60-90
VENCP83581T-4	T4	135°C	135°C	0-60	0-60	60-90
VXT30152T (-5)	T4	135°C	135°C	6-60	6-60	60-90
VXT30154T (-5)	T4	135°C	135°C	3-60	3-60	60-90
VXT30156T (-5)	T3C	160°C	160°C	3-60	3-60	60-90
VXT3012T (-5)	T4	135°C	135°C	6-60	6-60	60-90
VXT3014T (-5)	T4	135°C	135°C	3-60	3-60	60-90
VXT3016T (-5)	T4	135°C	135°C	3-60	3-60	60-90
VXT3022T (-5)	T4	135°C	135°C	6-60	6-60	60-90
VXT3024T (-5)	T4	135°C	135°C	3-60	3-60	60-90
VXT3026T (-5)	T3C	160°C	160°C	3-60	3-60	60-90
VXT3032T (-5)	T3C	160°C	160°C	6-60	6-60	60-90
VXT3032T-140	(1)	(1)	(1)	6-60	6-60	60-90
VXT3034T (-5)	T3C	160°C	160°C	3-60	3-60	60-90
VXT3036T (-5)	T3C	160°C	160°C	3-60	3-60	60-90
VXT3052T (-5)	T3C	160°C	160°C	6-60	6-60	60-90
VXT3054T (-5)	T3C	160°C	160°C	6-60	6-60	60-90
VXT3056T (-5)	T3C	160°C	160°C	3-60	3-60	60-90
VXT3072T (-5)	T3C	160°C	160°C	6-60	6-60	60-90
VXT3072T-180	(1)	(1)	(1)	6-60	6-60	60-90
VXT3074T (-5)	T3C	160°C	180°C	3-60	3-60	60-90
VXT3076T (-5)	T3A	180°C	180°C	3-60	3-60	60-90
VXT3102T (-5)	T3C	160°C	160°C	3-60	3-60	60-90
VXT3104T (-5)	T3C	160°C	160°C	3-60	3-60	60-90
VXT3106T (-5)	T3A	180°C	180°C	3-60	3-60	60-90
VXT3152T (-5)	T3A	180°C	180°C	6-60	6-60	60-90
VXT3152T-210	(1)	(1)	(1)	15-60	15-60	60-90
VXT3154T (-5)	T3A	180°C	180°C	3-60	3-60	60-90
VXT3156T (-5)	T3A	180°C	180°C	3-60	3-60	60-90
VXT3202T (-5)	T3	200°C	200°C	6-60	6-60	60-90
VXT3204T (-5)	T3A	180°C	180°C	0-60	1-60	60-90
VXT3206T (-5)	T3	200°C	200°C	3-60	3-60	60-90
VXT3252T-250	(1)	(1)	(1)	6-60	6-60	60-90
VXT3252TS (-5)	T3	200°C	200°C	6-60	6-60	60-90
VXT3254T (-5)	T3A	180°C	180°C	3-60	3-60	60-90
VXT3256T (-5)	T3	200°C	200°C	0-60	1-60	60-90
VXT3302TS (-5)	T3	200°C	200°C	3-60	6-60	60-90
VXT3304T (-5)	T3	200°C	200°C	3-60	3-60	60-90
XT30152T (-5)	T4	135°C	135°C	6-60	6-60	60-90
XT30154T (-5)	T4	135°C	135°C	3-60	3-60	60-90
XT30156T (-5)	T3C	160°C	160°C	3-60	3-60	60-90
XT3012T (-5)	T4	135°C	135°C	6-60	6-60	60-90
XT3014T (-5)	T4	135°C	135°C	3-60	3-60	60-90
XT3016T (-5)	T4	135°C	135°C	3-60	3-60	60-90
XT3022T (-5)	T4	135°C	135°C	6-60	6-60	60-90
XT3024T (-5)	T4	135°C	135°C	3-60	3-60	60-90
XT3026T (-5)	T3C	160°C	160°C	3-60	3-60	60-90
XT3032T (-5)	T3C	160°C	160°C	6-60	6-60	60-90
XT3032T-140	(1)	(1)	(1)	6-60	6-60	60-90
XT3034T (-5)	T3C	160°C	160°C	3-60	3-60	60-90
XT3036T (-5)	T3C	160°C	160°C	3-60	3-60	60-90
XT3052T (-5)	T3C	160°C	160°C	6-60	6-60	60-90
XT3054T (-5)	T3C	160°C	160°C	3-60	3-60	60-90
XT3056T (-5)	T3C	160°C	160°C	3-60	3-60	60-90
XT3072T (-5)	T3C	160°C	160°C	6-60	6-60	60-90
XT3072T-180	(1)	(1)	(1)	6-60	6-60	60-90

* 0 Hz = motor slip Hz (1) Not suitable for Division 2 applications **(-4)** 460 volt version **(-5)** 575 volt version

Division 2 capabilities (continued)

Catalog Number	Sine Wave Temp Code	Sine Wave, 1.15 S.F. Equivalent Zone Temp Code T = °C	Inverter Temp Code T = °C	Inverter Power, 1.0 S.F. V.T. Speed Range (Hz)*	C.T. Speed Range (Hz)*	CHP Speed Range (Hz)
XT3074T (-5)	T3C	160°C	160°C	3-60	3-60	60-90
XT3076T (-5)	T3A	180°C	180°C	0-60	1-60	60-90
XT31002TS (-5)	T3	200°C	200°C	0-60	6-60	60-75
XT31004T (-5)	T2D	215°C	215°C	0-60	10-60	60-90
XT31006T-4 (-5)	T3	200°C	200°C	0-60	15-60	60-90
XT3102T (-5)	T3C	160°C	160°C	6-60	6-60	60-90
XT3104T (-5)	T3C	160°C	160°C	3-60	3-60	60-90
XT3106T (-5)	T3A	180°C	180°C	3-60	3-60	60-90
XT31252TS (-5)	T3	200°C	200°C	0-60	15-60	60-75
XT31254T-4 (-5)	T3	200°C	200°C	0-60	10-60	60-90
XT31256T-4 (-5)	T3	200°C	200°C	0-60	15-60	60-90
XT31502TS-4 (-5)	T3	200°C	200°C	0-60	10-60	60-75
XT31504T-4 (-5)	T3	200°C	200°C	0-60	15-60	60-90
XT31506T-4 (-5)	T3	200°C	200°C	0-60	15-60	60-90
XT3152T (-5)	T3A	180°C	180°C	6-60	6-60	60-90
XT3152T-210	(1)	(1)	(1)	15-60	15-60	60-90
XT3154T (-5)	T3A	180°C	180°C	3-60	3-60	60-90
XT3156T (-5)	T3A	180°C	180°C	3-60	3-60	60-90
XT32002TS-4 (-5)	T3	200°C	200°C	0-60	30-60	60-75
XT32004T-4 (-5)	T3	200°C	200°C	0-60	30-60	60-90
XT32006T-4 (-5)	T3	200°C	200°C	0-60	30-60	60-90
XT3202T (-5)	T3	200°C	200°C	6-60	6-60	60-90
XT3204T (-5)	T3A	180°C	180°C	3-60	3-60	60-90
XT3206T (-5)	T3	200°C	200°C	3-60	3-60	60-90
XT32502TS-4 (-5)	T2C	230°C	230°C	0-60	30-60	60-75
XT32504T-4 (-5)	T3	200°C	200°C	0-60	30-60	60-90
XT32506T-4 (-5)	T2C	230°C	230°C	0-60	30-60	60-90
XT3252T-250	(1)	(1)	(1)	6-60	6-60	60-90
XT3252TS (-5)	T3	200°C	200°C	6-60	6-60	60-90
XT3254T (-5)	T3A	180°C	180°C	3-60	3-60	60-90
XT3256T (-5)	T3	200°C	200°C	3-60	3-60	60-90
XT33002TS-4 (-5)	T2C	230°C	230°C	0-60	30-60	60-75
XT33004T-4 (-5)	T2C	230°C	230°C	0-60	30-60	60-90
XT3302TS (-5)	T3	200°C	200°C	6-60	6-60	60-90
XT3304T (-5)	T3	200°C	200°C	3-60	3-60	60-90
XT3306T (-5)	T3	200°C	200°C	3-60	3-60	60-90
XT3402TS (-5)	T3	200°C	200°C	6-60	6-60	60-90
XT3404T (-5)	T3	200°C	200°C	3-60	3-60	60-90
XT3406T (-5)	T3A	180°C	180°C	0-60	6-60	60-90
XT3502TS (-5)	T3	200°C	200°C	3-60	6-60	60-90
XT3504T (-5)	T3	200°C	200°C	3-60	3-60	60-90
XT3506T (-5)	T3	200°C	200°C	0-60	6-60	60-90
XT3602TS (-5)	T3	200°C	200°C	0-60	6-60	60-75
XT3604T (-5)	T3	200°C	200°C	0-60	10-60	60-90
XT3606T (-5)	T3A	180°C	180°C	0-60	6-60	60-90
XT3752TS (-5)	T3	200°C	200°C	0-60	10-60	60-75
XT3754T (-5)	T3	200°C	200°C	0-60	30-60	60-90
XT3756T (-5)	T3	200°C	200°C	0-60	10-60	60-90

* 0 Hz = motor slip Hz (1) Not suitable for Division 2 applications **(-4)** 460 volt version **(-5)** 575 volt version

NEW!

Large Motors and Generators

North America is an important market for Large Motors and Generators Division, and we take great pride in the reputation and history we have built in this market. For over 100 years, ABB motors have been trusted by many of the U.S.'s leading companies and institutions, including NASA. Our products are being used to support major projects in North America, including critical infrastructure such as helping to protect New Orleans from future flooding. We take seriously our responsibility to continue in this way to provide long-lasting solutions that have a high positive impact on the well-being of our society and environment. ABB Large Motors and Generators provides the reliability, efficiency and variety you require for your toughest and most demanding applications. Investment in a large motor is a long-term decision and the choice of technology company can have a significant impact on lifetime costs. We build quality, energy efficiency and reliability into our solutions to give peace of mind to our customers. Even in challenging environments, such as explosive atmospheres and dusty applications, our motors are resilient.

NXR US – Modified to Order (MTO)

The North American Large Motors and Generators market has unique application and performance requirements. The rib-cool NXR US motor was created/developed with state of the art design features to meet those needs. ABB NXR US motors are designed in North America for the North American market. With cost efficient, standardized designs, the NXR US is designed for applications where a highly customized motor may not be required. ABB continues to invest in this product by adding inventory and modified-to-order capabilities in our Athens, Georgia plant. This investment will allow us to keep our lead times low and customers options high.

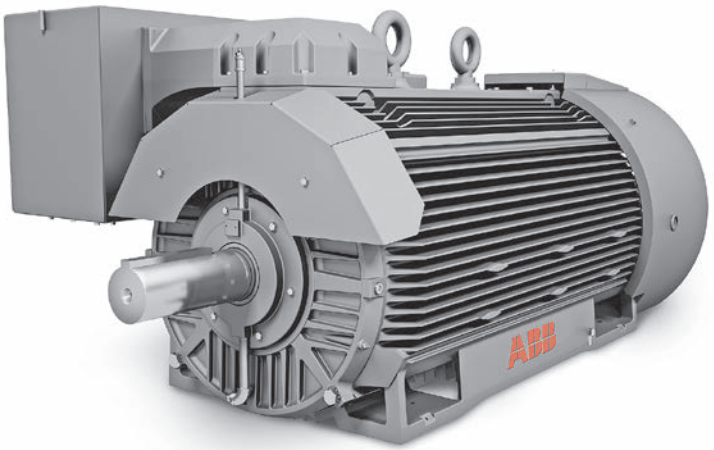

Key features:

- Low vibration, cast iron frame construction.
- Minimum NEMA Design B torques, allowing for operation across a variety of applications.
- 1.15 SF as standard
- Class F insulation with Class B (80˚C) temperature rise at rated power
- V-Ring slinger for increased bearing protection
- Designed for longevity with a 3 year warranty
- ABB motors meet or exceed all efficiency requirements for US, Canada and Mexico regulations

ABB NXR US motors up to 1000 Hp are stocked in the US with the following features:

- Stock completed motors (rerates) 50Hz/60Hz (voltage options) 380V/460V Random; 2300/3300/4000V Form
- 2-6 pole
- 100 ohm platinum winding RTDs – Stators have 7 RTDS – 2 per phase (one spare)
- Corrosion-resistant paint protection on interior metal surfaces
- Cast iron frame and end brackets
- 0.005" foot flatness
- Insulated ODE bearing and brackets
- Stainless steel hardware – ANSI
- Class F insulation
- Service Factor of 1.15 DOL
- 3.5 PU surge capability
- Suitable for use on a VSD 2:1 CT / 10:1 VT (4:1 CT with blower Mod)
- CSA approval Class 1 & 2, Div. II
- IP54 – Standard – IP55 with Modifications
- 100 ohm platinum winding RTDs
- Coil head space heaters
- Stock brackets, caps, lead channels and NEMA sized Main Terminal Boxes
- Standard auxiliary box for accessories – non-metallic
- Performance data, drawings and other information is readily available

Available modifications:

- ABB Ability Smart Sensor for motors
- Standard NXR rerates
- Bearing changes – Ball to roller
- Bearing RTDs provisions
- Blower kits for blower cooling (with tach)
- Shaft ground for non-CSA motors
- Vibration provisions
- Modifiable Main Terminal Box positions – F1, F2, F3

NEW!

AXR – Engineered to Order (ETO) / NXR 315 - 500

Main specifications

Output power:	100 to 1850 kW / 130 to 2500 Hp
Frame size:	315 to 500
Number of poles:	2 to 12
Voltage:	Up to 10 kV
Frequency:	50 / 60 Hz, VSD
Cooling:	IC411, IC416
Protection:	IP55 (optionally up to IP66)
Enclosure material:	Cast iron
Bearings:	Antifriction or sleeve
Motor types:	NXR and AXR
Mounting:	Horizontal or vertical
Standards:	IEC / NEMA MG 1
Ex protection types for AXR:	Ex ec (previously Ex nA), Ex eb
	(previously Ex e), Ex tb, Ex pxb, Ex pzc, Div. 2, Class I B, C, D / Zone 2, Class 1, IIA, IIB, IIC
Certificates:	Various local and global certificates available in type- or product specific form. Example: ATEX, IEC, IECEx, TRCU, CCoE, INMETRO, CSA, CCC…
Direct-on-line and variable speed drive use	
Quadratic and constant torque	
3D models available as standard	

General purpose motors
N-series

High voltage general purpose motors

- Targeted at applications where a highly customized motor is not needed
- Easy to buy
- Short lead time
- Combined quality, cost-efficiency and industry experience
- Pre-engineered designs
  - Meet most common needs across a wide range of industries
- Based on ABB's broad experience of different industries and applications

N-series

- High voltage rib cooled motors NXR
- Modular induction motors NMI

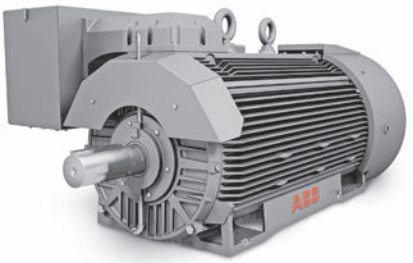

Engineered motors
A-series

High voltage engineered motors

- Based on customer specification
- Highly customized
- Fine-tuned to the customer's precise needs
- Offer a high degree of engineering flexibility

A-series

- High voltage rib cooled motors AXR
- Modular induction motors AMI
- Flameproof motors AMD
- Synchronous motors AMS and AMZ
- Slip-ring motors for Cement and Mining industry

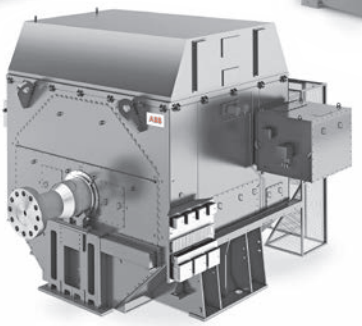

ABB base values for all products: energy efficiency, reliability, productivity, total cost of ownership, safety, product lifetime support, global service network

ABB Large motor portfolio

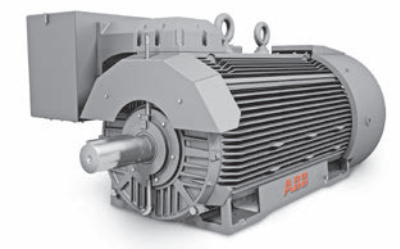

Feature	Rib cooled motor NXR US	Rib cooled motor NXR EN	Rib cooled motor AXR EN
Hp	250-1000	130-2500	130-2500
Voltage	380/460 Random Wound, 2300/4000 or 3300 Form Wound	Up to 10 KV	Up to 10 KV
Frame Range	5000-5800 (NEMA)	315-500 (IEC)	315-500 (IEC)
Mounting	Horizontal	Horizontal/Vertical	Horizontal/Vertical
Plant	United States	China/India/Finland	China/India/Finland
Materials	Cast Iron construction	Cast Iron construction	Cast Iron construction
Enclosure	IP54 (IP56 upgrade)	IP55 (IP 66 upgrade)	IP55 (IP 66 upgrade)
NEMA Design	Part 20 Normal Torque	Part 20 Normal Torque / Custom Design Available	Part 20 Normal Torque / Custom Design Available
Bearings	A/F - Regreasable	A/F – Regreasable / Sleeve (500 frame only)	A/F – Regreasable / Sleeve
Markings	Div. 2, Class I C, D	Safe area only	Optional Div. 2, Class I B, C, D / Zone 2, Class 1, IIA, IIB, IIC
Lead Time	Stock – up to 10 days with modifications	10-12 weeks	12-20 weeks
VFD Capable	Yes	Option	Option

Feature	Rib cooled motor HXR 560	Flameproof motor AMD
Hp	1900-3050	AMDR 215 – 2150 / AMDT* 2150 – 10700
Voltage	Up to 10 kV	Up to 11 kV
Frame Range	560 (IEC)	AMDR 355-500 / AMDT* 500-900 (IEC)
Mounting	Horizontal/Vertical	Horizontal / Vertical
Plant	China/Finland	AMDR China/Finland / AMDT* Italy
Materials	Cast Iron construction	AMDR Cast Iron / AMDT* Fabricated
Enclosure	IP55 (IP 66 upgrade)	IP55 (IP 66 – AMDR upgrade)
NEMA Design	Part 20 Normal torque / Custom design available	Part 20 Normal torque / Custom design available
Bearings	A/F – Regreasable / Sleeve	A/F – Regreasable / Sleeve
Markings	Optional Div. 2, Class I B, C, D / Zone 2, Class 1, IIA, IIB, IIC	Optional Div. 2, Class I B, C, D / Zone 2, Class 1, IIA, IIB, IIC
Lead Time	12-22 weeks	17-33 weeks
VFD Capable	Option	Option

ABB Large motor portfolio

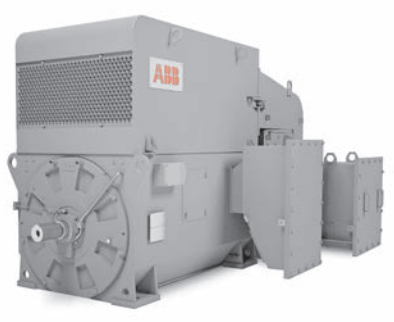

Feature	Modular induction motor NMI	Modular induction motor AMI	Slip ring motor NMK
Hp	Up to 10,000	Up to 38,000 Hp	Up to 13,000
Voltage	Up to 13.8 KV	Up to 13.8 KV	Up to 13.8 KV
Frame Range	355-630 (IEC)	400-1000 (IEC)	400-710 (IEC)
Mounting	Horizontal / Vertical	Horizontal / Vertical	Horizontal
Plant	China/India	China/India/Finland	China/India
Materials	Fabricated Frame	Fabricated Frame	Fabricated Frame
Enclosure	IP55	IP55 (IP 56 option)	IP55 (IP 56/65/66 option)
NEMA Design	Part 20 Normal torque	Part 20 Normal torque / Custom design available	Part 20 Normal torque / Custom design available
Bearings	A/F – Regreasable / Sleeve	A/F – Regreasable / Sleeve	A/F – Regreasable / Sleeve
Markings	Safe area only with CSA certificate Available for 60 Hz NEMA designs	Optional Div. 2, Class I B, C, D / Zone 2, Class 1, IIA, IIB, IIC	Safe area only
Lead Time	8-15 weeks	12-25 weeks	15-27 weeks
VFD Capable	Option	Option	N/A

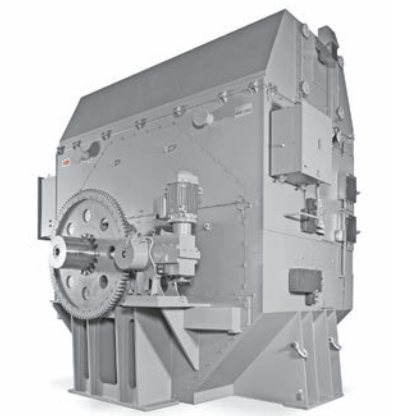

Feature	Synchronous Motor AMS	Synchronous Motor AMZ
Hp	Up to 100,000	Up to 85,000
Voltage	3-15 kV	Up to 15 kV
Frame Range	710-2500 (mm)	710-2500 (2800)
Mounting	Horizontal	Horizontal / Vertical
Plant	Sweden	Finland
Materials	Fabricated frame	Fabricated frame
Enclosure	IP54 (IP55 & 56 option)	IP54 (IP55 & 56 option)
NEMA Design	Yes	Yes
Bearings	Sleeve (flood lube)	Single or dual sleeve (flood lube)
Markings	Optional Div. 2, Class I B, C, D / Zone 2, Class 1, IIA, IIB, IIC	Optional Div. 2, Class I B, C, D / Zone 2, Class 1, IIA, IIB, IIC
Lead Time	10-12 months	10-12 months
VFD Capable	Option	Option

ABB Generators portfolio

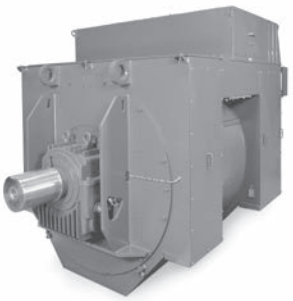

Feature	Generators AMG	Generators AMS	Renewable Generators
Hp	Up to 70 MVA	Up to 85 MVA	1.5 – 15 MVA
Voltage	0-15 kV	3-15 kV	690V – 13.8 kV
Frame Range	400 - 2500 mm	710-1400 (mm)	500 – 2500 mm, larger segmented
Mounting	Horizontal	Horizontal	Horizontal / Vertical
Plant	Finland/China/Estonia	Sweden	China/India/Finland
Materials	Fabricated frame	Fabricated frame	Fabricated frame / cast iron
Enclosure	Up to IP56	IP54 (IP55&56 option)	IP23/IP44/IP54/IP55
NEMA Design	Option	Yes	Option
Bearings	Antifriction, sleeve	Sleeve (flood lube)	Antifriction
Markings	Optional Ex ec	Optional Div. 2, Class I B, C, D / Zone 2, Class 1, IIA, IIB, IIC	Safe area UL1004/CSA22.2 / GL Wind / IEC 61400
Lead Time	6-20 w typical	10-12 months	Prototype 9-18 months, serial production 12-20w
VFD Capable	Optional	N/A	Yes

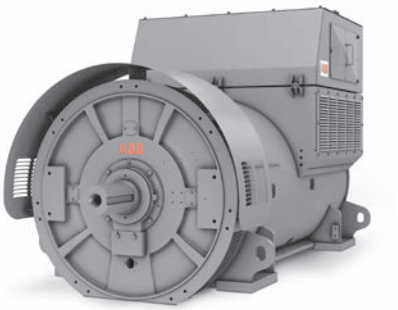

Feature	Synchronous Condensers	Data Center Generators
Hp	Up to 85 MVA	1-3 MVA
Voltage	3-15 kV	11 kV (others optional)
Frame Range	710-1400 (mm)	500 mm (others optional)
Mounting	Horizontal	Horizontal
Plant	Sweden	China
Materials	Fabricated frame	Fabricated frame
Enclosure	IP54 (IP55&56 option)	IP23
NEMA Design	Yes	Option
Bearings	Sleeve (flood lube)	Antifriction
Markings	N/A	N/A
Lead Time	10-12 months	Up to 4w
VFD Capable	N/A	N/A

Washdown duty motors

Baldor-Reliance® Washdown duty motors are designed to meet the demands of applications that require additional protection from contaminants, and the ability to operate in an environments exposed to washdown methods. As the broadest washdown product family in the marketplace, ABB offers motors from painted to stainless steel to meet the washdown needs of our customers.

Key features:

- Double sealed motor bearings
- Neoprene rubber gaskets ensure a tight, waterproof seal
- 300 series stainless steel shaft, hardware and nameplate
- Shaft seals on each end
- Sealed frame to endplate joints to prevent water entry
- Easily removable drain plugs for thorough drainage in any position

1/3 - 75 Horsepower

Product line		Food Safe Washdown	Stainless steel	Paint free	White Washdown	White WD features
	NEMA Frames sizes	56-286TC	56C-256TC	56C-256TC	56-256TC	254-444TC
Electrical features						
Efficiency	Baldor-Reliance motors meet or exceed all efficiency requirements for US, Canada and Mexico regulations	S	S	S	S	S
Motor performance	1.15 Service Factor	S	S	S	S	S
	NEMA Design B (most designs)	S	S	S	S	S
Windings	Class F insulation with Class B rise (most designs)	–	S	S	S	S
	Class H insulation	S	A	A	A	A
	Dip & bake 100% varnish	S	S	S	S	S
	Epoxy encapsulated	S	A	A	A	–
	Single Phase	S	–	–	S	–
Connections	Washdown lead connection kit (heat shrink connectors)	S	A	A	A	A
Inverter	Inverter ready per NEMA MG-1 part 31.4.4.2	S	S	S	S	S
Mechanical features						
External parts	Steel frame and base, aluminum box and endplates	–	–	–	S	–
	300 series stainless steel shaft & hardware	S	S	S	S	S
	Polished head, 300 series stainless steel external hardware & drains	S	–	–	–	–
	Ball burnished aluminum endplates and conduit box	–	–	S	–	–
	300 series endplates and conduit box	S	S	–	–	–
	300 series stainless stator frame, conduit box lid and fan cover	S	S	S	–	–
Drains	3 removable plastic condensation drain plugs, each end	–	–	–	S	S
	3 removable stainless steel condensation drain plugs, each end	S	S	S	–	–
	1 extra plastic T-drain provided, each end (for 6:00 position)	S	S	S	S	S
	Stainless steel T-drains installed at 6:00, 180 frame and larger	S	–	–	–	–
Nameplate	Stainless steel nameplate affixed to band	–	–	S	S	S
	Nameplate information laser etched directly onto band	S	S	–	–	–
Conduit box	Neoprene, lipped box-to-stator gasket	–	S	S	S	S
	180° rotatable conduit box	–	S	S	S	S
	Lipped lid w/neoprene gasket	–	S	S	S	S
	Round conduit box, fully rotatable	S	–	–	–	–
	Epoxy encapsulated leads in box	S	–	–	–	–
	Fully welded conduit box	S	–	–	–	–
Rotor	Epoxy primed rotor	S	S	S	S	S
Lubrication	Mobil Polyrex™ EM moisture resistant grease	S	S	S	S	S
Cooling	Non-metallic external cooling fan	S	S	S	S	S
Base	Standard welded base	–	S	S	S	–
	Individual, fully welded feet for ease of cleanability	S	–	–	–	–
	Cast base	–	–	–	–	S
Sealing	Lip & V-Ring seal on drive end, V-Ring seal on opposite drive end (TEFC)	–	–	–	S	S
	Labyrinth seal on drive end, V-Ring seal on opposite drive end (TEFC)	–	–	S	A	A
	Labyrinth seal on each end (TEFC)	–	S	A	A	A
	2-part sealing system (internal & external seals) on each end (TEFC)	S	–	–	–	–
	Sealer on endplate-to-stator fits	–	S	S	S	S
	O-Rings on endplate-to-stator fits	S	–	–	–	–
Paint	White epoxy, corrosion resistant finish	–	–	–	S	S
IP code	Ingress protection code	IP69 for water	IP56	IP55	IP55	IP55

A = Available through Mod Express® or as custom
S = Standard

Food Safe stainless steel, single phase, C-Face

1/2 thru 1 Hp

IP69 for Water

Features:

- 300 series stainless steel
- Individually welded feet for ease of cleaning
- Welded & polished conduit box
- Smooth heads on external drains & hardware
- O-ring sealed endplates
- Laser etched nameplate
- Removable condensate drains in each endplate
- Internal & external shaft sealing
- No crevices for food to collect
- 3 year warranty

Applications:

- Food processing
- High pressure washdown
- Caustic environment
- Pumps and wastewater
- Outdoors
- Sanitary washdown

Hp	RPM	NEMA Frame	Enclosure	Catalog Number	List Price	Disc. Sym.	"C" Dim.	Aprx. Wt. (lb)	Full Load Efficiency	Voltage	Full Load Amps	Notes (a)
Foot mounted												
1/2	3600	56C	TEFC	**CFSWDL3503**	2,289	WDF	13.96	33	59.5	115/230	3.6	12
	1800	56C	TEFC	**CFSWDL3504**	2,453	WDF	13.96	41	70	115/230	3.5	
3/4	3600	56C	TEFC	**CFSWDL3506**	2,534	WDF	13.96	33	64	115/230	4.6	12
	1800	56C	TEFC	**CFSWDL3507**	2,683	WDF	14.83	47	70	115/230	4.6	
1	3600	56C	TEFC	**CFSWDL3509**	2,705	WDF	13.96	41	68	115/230	5.8	12
	1800	56C	TEFC	**CFSWDL3510**	2,885	WDF	16.26	63	72	115/230	5.8	
Footless												
1/2	3600	56C	TEFC	**VFSWDL3503**	2,163	WDF	13.96	33	59.5	115/230	3.6	12
	1800	56C	TEFC	**VFSWDL3504**	2,327	WDF	13.96	41	70	115/230	3.5	
3/4	3600	56C	TEFC	**VFSWDL3506**	2,408	WDF	13.96	33	64	115/230	4.6	12
	1800	56C	TEFC	**VFSWDL3507**	2,557	WDF	14.83	47	70	115/230	4.6	
1	3600	56C	TEFC	**VFSWDL3509**	2,579	WDF	13.96	41	68	115/230	5.8	12
	1800	56C	TEFC	**VFSWDL3510**	2,759	WDF	16.26	63	72	115/230	5.8	

(a) See notes on inside back flap.

Food Safe stainless steel, three phase, C-Face, foot mounted, encapsulated

1/2 thru 30 Hp

IP69 for Water

Features:

- Individually welded feet for ease of cleaning
- Rotatable, round conduit box
- Welded & polished conduit box
- Smooth heads on external drains & hardware
- O-ring sealed endplates & conduit box
- Encapsulated, color-coded leads
- No crevices for food to collect
- 300 series stainless steel
- Epoxy encapsulated windings
- Laser etched nameplate
- Removable condensate drains in each endplate
- Internal & external shaft sealing
- Class H insulation system, inverter ready
- 3 year warranty, NEMA Premium® efficiency

Applications:

- Food processing
- High pressure washdown
- Caustic environment
- Pumps and wastewater
- Outdoors
- Sanitary washdown

Hp	RPM	NEMA Frame	Enclosure	Catalog Number	List Price	Disc. Sym.	"C" Dim.	Aprx. Wt. (lb)	Full Load Efficiency	Voltage	Full Load Amps	Notes (a)
230/460 volt												
1/2	3600	56C	TENV	**CFSWDM3537-E**	2,691	WDF	11.78	35	84	208-230/460	0.7	30
	1800	56C	TENV	**CFSWDM3538-E**	2,731	WDF	11.78	38	84	208-230/460	0.9	
	1200	56C	TENV	**CFSWDM3539-E**	3,281	WDF	12.78	37	77	208-230/460	0.9	
3/4	3600	56C	TENV	**CFSWDM3541-E**	2,781	WDF	11.78	41	86.5	208-230/460	1	30
	1800	56C	TENV	**CFSWDM3542-E**	2,824	WDF	12.78	37	84	208-230/460	1.3	
	1200	56C	TENV	**CFSWDM3543-E**	3,372	WDF	13.67	45	82.5	208-230/460	1.3	
1	3600	56C	TENV	**CFSWDM3545-E**	2,920	WDF	11.78	38	82.5	230/460	1.4	30
	1800	56C	TENV	**CFSWDM3546-E**	2,950	WDF	12.78	37	85.5	230/460	1.5	30
		143TC	TENV	**CFSWDM3546T-E**	2,973	WDF	12.84	37	85.5	230/460	1.5	30
	1200	56C	TENV	**CFSWDNM3556-E**	3,382	WDF	15.08	64	84	230/460	1.7	
		56C	TEFC	**CFSWDM3556-E**	3,487	WDF	14.83	45	82.5	230/460	1.7	30
1 1/2	3600	56C	TENV	**CFSWDM3550-E**	3,087	WDF	13.67	50	85.5	230/460	1.8	30
		143TC	TENV	**CFSWDM3550T-E**	3,112	WDF	13.72	50	85.5	230/460	1.8	30
	1800	56C	TENV	**CFSWDNM3554-E**	3,048	WDF	15.04	59	86.5	230/460	2.1	30
		56C	TEFC	**CFSWDM3554-E**	3,152	WDF	13.96	45	86.5	230/460	2.2	30
		145TC	TENV	**CFSWDNM3554T-E**	3,132	WDF	15.09	59	86.5	230/460	2.1	30
		145TC	TEFC	**CFSWDM3554T-E**	3,236	WDF	14.03	48	86.5	230/460	2.2	30
	1200	182TC	TEFC	**CFSWDM3607T-E**	3,865	WDF	18.89	90	87.5	230/460	2.6	
2	3600	56C	TENV	**CFSWDNM3555-E**	3,487	WDF	15.04	61	88.5	230/460	2.4	
		56C	TEFC	**CFSWDM3555-E**	3,644	WDF	14.90	50	86.5	230/460	2.5	30
		145TC	TENV	**CFSWDNM3555T-E**	3,563	WDF	15.09	61	88.5	230/460	2.4	
		145TC	TEFC	**CFSWDM3555T-E**	3,667	WDF	14.90	50	86.5	230/460	2.5	30
	1800	56C	TENV	**CFSWDNM3558-E**	3,538	WDF	15.09	59	88.5	230/460	2.8	
		56C	TEFC	**CFSWDM3558-E**	3,642	WDF	13.96	45	86.5	230/460	2.8	30
		145TC	TENV	**CFSWDNM3558T-E**	3,606	WDF	15.09	63	88.5	230/460	2.8	
		145TC	TEFC	**CFSWDM3558T-E**	3,710	WDF	14.03	45	86.5	230/460	2.8	30
	1200	184TC	TEFC	**CFSWDM3614T-E**	4,290	WDF	18.89	101	88.5	230/460	3.5	
3	3600	56C	TEFC	**CFSWDM3559-E**	4,136	WDF	16.21	61	86.5	230/460	3.6	
		145TC	TEFC	**CFSWDM3559T-E**	4,322	WDF	16.28	61	86.5	230/460	3.7	30
		182TC	TENV	**CFSWDNM3610T-E**	4,473	WDF	18.89	96	89.5	230/460	3.5	
	1800	182TC	TENV	**CFSWDNM3611T-E**	4,320	WDF	18.89	101	89.5	230/460	4	30
		182TC	TEFC	**CFSWDM3611T-E**	4,454	WDF	18.89	83	89.5	230/460	4.2	30
	1200	213TC	TEFC	**CFSWDM3704T-E**	5,653	WDF	21.37	158	89.5	230/460	4.5	

(a) See notes on inside back flap. **Red** catalog number indicates **NEW** product.

Food Safe stainless steel, three phase, C-Face, foot mounted, encapsulated

Hp	RPM	NEMA Frame	Enclosure	Catalog Number	List Price	Disc. Sym.	"C" Dim.	Aprx. Wt. (lb)	Full Load Efficiency	Voltage	Full Load Amps	Notes (a)
230/460 volt (continued)												
5	3600	184TC	TEFC	**CFSWDM3613T-E**	4,716	WDF	17.39	84	89.5	230/460	5.6	30
	1800	184TC	TEFC	**CFSWDM3615T-E**	4,751	WDF	18.89	101	89.5	230/460	6.5	30
	1200	215TC	TEFC	**CFSWDM3708T-E**	6,695	WDF	22.12	179	89.5	230/460	7.4	30
7 1/2	3600	213TC	TEFC	**CFSWDM3709T-E**	5,916	WDF	19.50	129	91	230/460	8.3	30
	1800	213TC	TEFC	**CFSWDM3710T-E**	6,039	WDF	20.68	136	91.7	230/460	9.5	
	1200	254TC	TEFC	**CFSWDM22976T-E**	11,494	WDF	24.18	255	91	230/460	10.7	30
10	3600	215TC	TEFC	**CFSWDM3711T-E**	6,708	WDF	20.68	149	91.7	230/460	10.6	30
	1800	215TC	TEFC	**CFSWDM3714T-E**	7,109	WDF	22.12	187	92.4	230/460	12.5	30
	1200	256TC	TEFC	**CFSWDM23932T-E**	13,067	WDF	25.18	290	91	230/460	15.1	
15	3600	215TC	TEFC	**CFSWDM3713T-E**	10,061	WDF	22.12	188	91.7	230/460	17	30
		254TC	TEFC	**CFSWDM23994T-E**	11,653	WDF	24.18	260	91	230/460	16.5	
	1800	254TC	TEFC	**CFSWDM23933T-E**	11,488	WDF	24.18	281	92.4	230/460	17.5	30
	1200	284TC	TEFC	**CFSWDM41900T**	14,716	WDF	28.14	488	91.7	230/460	20	22
20	3600	256TC	TEFC	**CFSWDM41906T-E**	13,208	WDF	25.18	295	91	230/460	21.5	
	1800	256TC	TEFC	**CFSWDM23934T-E**	13,140	WDF	25.18	290	93	230/460	23.4	
	1200	286TC	TEFC	**CFSWDM41902T**	18,817	WDF	28.14	493	91.7	230/460	26	22
25	3600	284TSC	TEFC	**CFSWDM41907T**	16,897	WDF	28.14	431	91.7	230/460	28	22
	1800	284TC	TEFC	**CFSWDM41903T**	16,802	WDF	28.14	471	93.6	230/460	31	22
30	3600	286TSC	TEFC	**CFSWDM41908T**	19,432	WDF	28.14	445	91.7	230/460	34	22
	1800	286TC	TEFC	**CFSWDM41904T**	19,323	WDF	28.14	485	93.6	230/460	36	22
575 volt												
1/2	3600	56C	TENV	**CFSWDM3537-5E**	2,733	WDF	11.78	35	84	575	0.6	
	1800	56C	TENV	**CFSWDM3538-5E**	2,772	WDF	11.78	35	84	575	0.7	
3/4	1800	56C	TENV	**CFSWDM3542-5E**	2,865	WDF	12.78	41	84	575	1	
1	1800	56C	TENV	**CFSWDM3546-5E**	2,991	WDF	12.78	41	85.5	575	1.2	
		143TC	TENV	**CFSWDM3546T-5E**	3,014	WDF	12.84	43	85.5	575	1.2	
1 1/2	1800	56C	TEFC	**CFSWDM3554-5E**	3,193	WDF	13.96	45	86.5	575	1.7	
		145TC	TEFC	**CFSWDM3554T-5E**	3,278	WDF	14.03	45	86.5	575	1.7	
2	1800	56C	TEFC	**CFSWDM3558-5E**	3,642	WDF	13.96	45	86.5	575	2.3	
		145TC	TEFC	**CFSWDM3558T-5E**	3,752	WDF	14.03	45	86.5	575	2.3	
3	3600	145TC	TEFC	**CFSWDM3559T-5E**	4,363	WDF	14.03	61	86.5	575	2.9	
	1800	182TC	TEFC	**CFSWDM3611T-5E**	4,561	WDF	18.89	86	89.5	575	3.3	
5	3600	184TC	TEFC	**CFSWDM3613T-5E**	4,822	WDF	17.39	84	89.5	575	4.5	
	1800	184TC	TEFC	**CFSWDM3615T-5E**	4,857	WDF	18.89	101	89.5	575	5.1	
7 1/2	3600	213TC	TEFC	**CFSWDM3709T-5E**	5,916	WDF	19.50	131	91	575	6.6	
	1800	213TC	TEFC	**CFSWDM3710T-5E**	6,039	WDF	20.68	139	91.7	575	7.6	
10	3600	215TC	TEFC	**CFSWDM3711T-5E**	6,708	WDF	20.68	154	90.2	575	9.1	
	1800	215TC	TEFC	**CFSWDM3714T-5E**	7,109	WDF	22.12	187	92.4	575	10.1	
15	1800	254TC	TEFC	**CFSWDM23933T-5E**	11,488	WDF	24.18	281	92.4	575	14.2	

(a) See notes on inside back flap.
Red catalog number indicates **NEW** product.

Food Safe stainless steel, three phase, C-Face, footless, encapsulated

1/2 thru 15 Hp

IP69 for Water

Features:

- Rotatable, round conduit box
- Welded & polished conduit box
- Smooth heads on external drains & hardware
- O-ring sealed endplates & conduit box
- Encapsulated, color-coded leads
- No crevices for food to collect
- 300 series stainless steel
- Epoxy encapsulated windings
- Laser etched nameplate
- Removable condensate drains in each endplate
- Internal & external shaft sealing
- Class H insulation system, inverter ready
- 3 year warranty, NEMA Premium® efficiency

Applications:

- Food processing
- High pressure washdown
- Caustic environment
- Pumps and wastewater
- Outdoors
- Sanitary washdown

Hp	RPM	NEMA Frame	Enclosure	Catalog Number	List Price	Disc. Sym.	"C" Dim.	Aprx. Wt. (lb)	Full Load Efficiency	Voltage	Full Load Amps	Notes (a)
230/460 volt												
1/2	3600	56C	TENV	**VFSWDM3537-E**	2,562	WDF	11.78	35	84	208-230/460	0.7	30
	1800	56C	TENV	**VFSWDM3538-E**	2,607	WDF	11.78	35	84	208-230/460	0.9	
		56C	TEFC	**VFSFWDM3538-E**	2,711	WDF	12.96	35	84	208-230/460	0.9	
	1200	56C	TENV	**VFSWDM3539-E**	2,562	WDF	12.78	37	77	208-230/460	0.9	
3/4	3600	56C	TENV	**VFSWDM3541-E**	2,655	WDF	11.78	38	86.5	208-230/460	1	30
	1800	56C	TENV	**VFSWDM3542-E**	2,698	WDF	12.78	41	84	208-230/460	1.3	
		56C	TEFC	**VFSFWDM3542-E**	2,802	WDF	13.96	37	84	208-230/460	1.3	
	1200	56C	TENV	**VFSWDM3543-E**	3,246	WDF	13.67	45	82.5	208-230/460	1.3	
1	3600	56C	TENV	**VFSWDM3545-E**	2,792	WDF	11.78	37	82.5	230/460	1.4	30
	1800	56C	TENV	**VFSWDM3546-E**	2,821	WDF	12.78	37	85.5	230/460	1.5	30
		56C	TEFC	**VFSFWDM3546-E**	2,928	WDF	13.96	44	85.5	230/460	1.5	30
		143TC	TENV	**VFSWDM3546T-E**	2,849	WDF	12.78	37	85.5	230/460	1.5	30
		143TC	TEFC	**VFSFWDM3546T-E**	2,953	WDF	13.96	37	85.5	230/460	1.5	30
	1200	56C	TEFC	**VFSWDM3556-E**	3,361	WDF	14.83	45	82.5	230/460	1.7	30
1 1/2	3600	56C	TENV	**VFSWDM3550-E**	2,960	WDF	13.67	53	85.5	230/460	1.8	30
		143TC	TENV	**VFSWDM3550T-E**	2,986	WDF	13.67	50	85.5	230/460	1.8	30
	1800	56C	TENV	**VFSWDNM3554-E**	2,922	WDF	15.04	59	86.5	230/460	2.1	30
		56C	TEFC	**VFSWDM3554-E**	3,026	WDF	13.96	45	86.5	230/460	2.2	30
		145TC	TENV	**VFSWDNM3554T-E**	3,006	WDF	15.04	59	86.5	230/460	2.1	30
		145TC	TEFC	**VFSWDM3554T-E**	3,111	WDF	13.96	45	86.5	230/460	2.2	30
2	3600	56C	TENV	**VFSWDNM3555-E**	3,362	WDF	15.04	63	88.5	230/460	2.4	
		145TC	TENV	**VFSWDNM3555T-E**	3,437	WDF	15.04	63	88.5	230/460	2.4	
		145TC	TEFC	**VFSWDM3555T-E**	3,541	WDF	14.83	50	86.5	230/460	2.5	30
	1800	56C	TENV	**VFSWDNM3558-E**	3,412	WDF	15.04	63	88.5	230/460	2.8	
		56C	TEFC	**VFSWDM3558-E**	3,517	WDF	13.96	56	86.5	230/460	2.8	30
		145TC	TENV	**VFSWDNM3558T-E**	3,480	WDF	15.04	63	88.5	230/460	2.8	
		145TC	TEFC	**VFSWDM3558T-E**	3,586	WDF	13.96	63	86.5	230/460	2.8	30
3	3600	56C	TEFC	**VFSWDM3559-E**	4,174	WDF	16.21	61	86.5	230/460	3.7	30
		145TC	TEFC	**VFSWDM3559T-E**	4,191	WDF	16.21	63	86.5	230/460	3.7	30
		182TC	TENV	**VFSWDNM3610T-E**	4,312	WDF	17.05	96	89.5	230/460	3.5	
	1800	56C	TEFC	**VFSWDM3651-E**	4,271	WDF	17.53	83	89.5	230/460	4.2	
		145TC	TEFC	**VFSWDM3651T-E**	4,279	WDF	17.60	83	89.5	230/460	4.2	
		182TC	TENV	**VFSWDNM3611T-E**	4,160	WDF	17.05	101	89.5	230/460	4	30
		182TC	TEFC	**VFSWDM3611T-E**	4,294	WDF	18.89	86	89.5	230/460	4.2	30

(a) See notes on inside back flap. **Red** catalog number indicates **NEW** product.

Food Safe stainless steel, three phase, C-Face, footless, encapsulated

Hp	RPM	NEMA Frame	Enclosure	Catalog Number	List Price	Disc. Sym.	"C" Dim.	Aprx. Wt. (lb)	Full Load Efficiency	Voltage	Full Load Amps	Notes (a)
230/460 volt (continued)												
5	3600	184TC	TEFC	**VFSWDM3613T-E**	4,556	WDF	17.39	81	89.5	230/460	5.6	30
	1800	184TC	TEFC	**VFSWDM3615T-E**	4,592	WDF	18.89	101	89.5	230/460	6.5	30
7 1/2	3600	213TC	TEFC	**VFSWDM3709T-E**	5,697	WDF	19.49	131	91	230/460	8.3	30
	1800	213TC	TEFC	**VFSWDM3710T-E**	5,818	WDF	20.68	136	91.7	230/460	9.5	
10	3600	215TC	TEFC	**VFSWDM3711T-E**	6,490	WDF	20.68	149	91.7	230/460	10.6	30
	1800	215TC	TEFC	**VFSWDM3714T-E**	6,891	WDF	22.12	187	92.4	230/460	12.5	30
15	3600	215TC	TEFC	**VFSWDM3713T-E**	9,842	WDF	22.12	187	91.7	230/460	17	30
575 volt												
1/2	1800	56C	TENV	**VFSWDM3538-5E**	2,607	WDF	11.78	35	84	575	0.7	
3/4	1800	56C	TENV	**VFSWDM3542-5E**	2,698	WDF	12.78	37	84	575	1	
1	1800	56C	TENV	**VFSWDM3546-5E**	2,821	WDF	12.78	39	87.5	575	1.2	
		143TC	TENV	**VFSWDM3546T-5E**	2,849	WDF	12.84	39	87.5	575	1.2	
1 1/2	1800	145TC	TEFC	**VFSWDM3554T-5E**	3,111	WDF	14.03	48	86.5	575	1.7	
2	1800	145TC	TEFC	**VFSWDM3558T-5E**	3,586	WDF	16.28	56	88.5	575	2.2	
10	1800	215TC	TEFC	**VFSWDM3714T-5E**	6,891	WDF	22.12	187	92.4	575	10.1	

(a) See notes on inside back flap.
Red catalog number indicates **NEW** product.

NEW!

Food Safe stainless steel, three phase, C-Face, encapsulated, with internal AEGIS® Bearing Protection Ring

1/2 thru 10 Hp

AEGIS® SGR BEARING PROTECTION RING
AEGIS INSTALLED

IP69 for Water

Features:

- Individually welded feet for ease of cleaning
- Rotatable, round conduit box
- Welded & polished conduit box
- Smooth heads on external drains & hardware
- O-ring sealed endplates & conduit box
- Encapsulated, color-coded leads
- No crevices for food to collect
- 300 series stainless steel
- Internal grounding ring for bearing current mitigation
- Epoxy encapsulated windings
- Laser etched nameplate
- Removable condensate drains in each endplate
- Internal & external shaft sealing
- Class H insulation system, inverter ready
- 3 year warranty, NEMA Premium® efficiency

Applications:

- Food processing
- High pressure washdown
- Caustic environment
- Pumps and wastewater
- Outdoors
- Sanitary washdown

Hp	RPM	NEMA Frame	Enclosure	Catalog Number	List Price	Disc. Sym.	"C" Dim.	Aprx. Wt. (lb)	Full Load Efficiency	Voltage	Full Load Amps	Notes (a)
Foot mounted												
1/2	1800	56C	TENV	**CFSWDM3538-E-G**	3,156	WDF	11.78	38	84	208-230/460	0.9	
3/4	1800	56C	TENV	**CFSWDM3542-E-G**	3,249	WDF	12.78	37	84	208-230/460	1.3	
1	1800	56C	TENV	**CFSWDM3546-E-G**	3,375	WDF	12.78	37	85.5	230/460	1.5	30
		143TC	TENV	**CFSWDM3546T-E-G**	3,398	WDF	12.84	37	85.5	230/460	1.5	30
1 1/2	1800	56C	TENV	**CFSWDNM3554-E-G**	3,473	WDF	15.04	59	86.5	230/460	2.1	30
		145TC	TENV	**CFSWDNM3554T-E-G**	3,557	WDF	15.09	59	86.5	230/460	2.1	30
2	1800	56C	TENV	**CFSWDNM3558-E-G**	3,963	WDF	15.09	59	88.5	230/460	2.8	
		145TC	TENV	**CFSWDNM3558T-E-G**	4,031	WDF	15.09	63	88.5	230/460	2.8	
3	3600	56C	TEFC	**CFSWDM3559-E-G**	4,561	WDF	16.21	61	86.5	230/460	3.6	
	1800	182TC	TENV	**CFSWDNM3611T-E-G**	4,745	WDF	18.89	101	89.5	230/460	4	30
5	1800	184TC	TEFC	**CFSWDM3615T-E-G**	5,176	WDF	18.89	101	89.5	230/460	6.5	30
7.5	1800	213TC	TEFC	**CFSWDM3710T-E-G**	6,464	WDF	20.68	136	91.7	230/460	9.5	
10	3600	215TC	TEFC	**CFSWDM3711T-E-G**	7,133	WDF	20.68	149	91.7	230/460	10.6	30
	1800	215TC	TEFC	**CFSWDM3714T-E-G**	7,534	WDF	22.12	187	92.4	230/460	12.5	30
Footless												
1/2	1800	56C	TENV	**VFSWDM3538-E-G**	3,032	WDF	11.78	35	84	208-230/460	0.9	
3/4	1800	56C	TENV	**VFSWDM3542-E-G**	3,123	WDF	12.78	41	84	208-230/460	1.3	
1	1800	56C	TENV	**VFSWDM3546-E-G**	3,246	WDF	12.78	37	85.5	230/460	1.5	30
		143TC	TENV	**VFSWDM3546T-E-G**	3,274	WDF	12.78	37	85.5	230/460	1.5	30
1 1/2	1800	56C	TENV	**VFSWDNM3554-E-G**	3,347	WDF	15.04	59	86.5	230/460	2.1	30
		145TC	TENV	**VFSWDNM3554T-E-G**	3,431	WDF	15.04	59	86.5	230/460	2.1	30
2	1800	56C	TENV	**VFSWDNM3558-E-G**	3,837	WDF	15.04	63	88.5	230/460	2.8	
		145TC	TENV	**VFSWDNM3558T-E-G**	3,905	WDF	15.04	63	88.5	230/460	2.8	
3	3600	56C	TEFC	**VFSWDM3559-E-G**	4,599	WDF	16.21	61	86.5	230/460	3.7	30
	1800	145TC	TEFC	**VFSWDM3651T-E-G**	4,704	WDF	17.60	83	89.5	230/460	4.2	
5	1800	184TC	TEFC	**VFSWDM3615T-E-G**	5,017	WDF	18.89	101	89.5	230/460	6.5	30

(a) See notes on inside back flap.
Red catalog number indicates **NEW** product

NEW!

Food Safe stainless steel, three phase, foot mounted, encapsulated

1/2 thru 30 Hp

IP69 for Water

Features:

- Individually welded feet for ease of cleaning
- Rotatable, round conduit box
- Welded & polished conduit box
- Smooth heads on external drains & hardware
- O-ring sealed endplates & conduit box
- Encapsulated, color-coded leads
- No crevices for food to collect
- 300 series stainless steel
- Epoxy encapsulated windings
- Laser etched nameplate
- Removable condensate drains in each endplate
- Internal & external shaft sealing
- Class H insulation system, inverter ready
- 3 year warranty, NEMA Premium® efficiency

Applications:

- Food processing
- High pressure washdown
- Caustic environment
- Pumps and wastewater
- Outdoors
- Sanitary washdown

Hp	RPM	NEMA Frame	Enclosure	Catalog Number	List Price	Disc. Sym.	"C" Dim.	Aprx. Wt. (lb)	Full Load Efficiency	Voltage	Full Load Amps	Notes (a)
1/2	1800	56	TENV	**FSWDM3538-E**	2,673	WDF	11.78	35	84	208-230/460	0.9	
3/4	1800	56	TENV	**FSWDM3542-E**	2,766	WDF	12.78	37	84	208-230/460	1.3	
1	1800	56	TENV	**FSWDM3546-E**	2,892	WDF	12.78	41	85.5	230/460	1.5	30
		143T	TENV	**FSWDM3546T-E**	2,915	WDF	12.84	41	85.5	230/460	1.5	30
1 1/2	1800	145T	TEFC	**FSWDM3554T-E**	3,178	WDF	14.03	45	86.5	230/460	2.2	30
2	1800	145T	TEFC	**FSWDM3558T-E**	3,652	WDF	14.03	48	86.5	230/460	2.8	30
3	1800	182T	TEFC	**FSWDM3611T-E**	4,350	WDF	18.89	86	89.5	230/460	4.2	30
5	1800	184T	TEFC	**FSWDM3615T-E**	4,647	WDF	18.89	101	89.5	230/460	6.5	30
7 1/2	1800	213T	TEFC	**FSWDM3710T-E**	5,888	WDF	20.68	136	91.7	230/460	9.5	
10	1800	215T	TEFC	**FSWDM3714T-E**	6,958	WDF	22.12	187	92.4	230/460	12.5	30
15	1800	254T	TEFC	**FSWDM23933T-E**	11,294	WDF	24.18	283	92.4	230/460	17.5	30
20	1800	256T	TEFC	**FSWDM23934T-E**	12,946	WDF	25.18	287	93	230/460	23.4	
25	1800	284T	TEFC	**FSWDM41903T**	16,573	WDF	28.14	378	93.6	230/460	31	22
30	1800	286T	TEFC	**FSWDM41904T**	19,094	WDF	28.14	395	93.6	230/460	36	22

(a) See notes on inside back flap.

Food Safe stainless steel, three phase, foot mounted, close-coupled pump, encapsulated

1 thru 20 Hp

IP69 for Water

Features:

- Individually welded feet for ease of cleaning
- Rotatable, round conduit box
- Welded & polished conduit box
- Smooth heads on external drains & hardware
- O-ring sealed endplates & conduit box
- Encapsulated, color-coded leads
- No crevices for food to collect
- 300 series stainless steel
- Epoxy encapsulated windings
- Laser etched nameplate
- Removable condensate drains in each endplate
- Internal & external shaft sealing
- Class H insulation system, inverter ready
- 3 year warranty, NEMA Premium® efficiency

Applications:

- Food processing
- High pressure washdown
- Caustic environment
- Pumps and wastewater
- Outdoors
- Sanitary washdown

Hp	RPM	NEMA Frame	Enclosure	Catalog Number	List Price	Disc. Sym.	"C" Dim.	Aprx. Wt. (lb)	Full Load Efficiency	Voltage	Full Load Amps	Notes (a)
1	1800	143JM	TENV	**JMFSWDM3546T-E**	3,440	WDF	14.97	37	85.5	230/460	1.5	30
1 1/2	3600	143JM	TENV	**JMFSWDM3550T-E**	3,578	WDF	15.85	50	85.5	230/460	1.8	30
	1800	145JM	TEFC	**JMFSWDM3554T-E**	3,598	WDF	16.15	45	86.5	230/460	2.2	30
2	3600	145JM	TEFC	**JMFSWDM3555T-E**	4,075	WDF	17.03	50	86.5	230/460	2.5	30
	1800	145JM	TEFC	**JMFSWDM3558T-E**	4,133	WDF	18.40	56	88.5	230/460	2.7	30
3	3600	145JM	TEFC	**JMFSWDM3559T-E**	4,895	WDF	18.40	61	86.5	230/460	3.7	30
	1800	182JM	TEFC	**JMFSWDM3611T-E**	5,139	WDF	19.72	83	89.5	230/460	4.2	30
5	3600	184JM	TEFC	**JMFSWDM3613T-E**	5,535	WDF	18.22	81	89.5	230/460	5.6	30
	1800	184JM	TEFC	**JMFSWDM3615T-E**	5,573	WDF	19.72	101	89.5	230/460	6.5	30
7 1/2	3600	213JM	TEFC	**JMFSWDM3709T-E**	6,524	WDF	20.62	131	91	230/460	8.3	30
	1800	213JM	TEFC	**JMFSWDM3710T-E**	6,647	WDF	21.81	139	91.7	230/460	9.5	
10	3600	215JM	TEFC	**JMFSWDM3711T-E**	7,315	WDF	21.81	154	91.7	230/460	10.6	30
	1800	215JM	TEFC	**JMFSWDM3714T-E**	7,717	WDF	23.56	187	92.4	230/460	12.5	30
15	3600	215JM	TEFC	**JMFSWDM3713T-E**	10,588	WDF	23.56	187	91.7	230/460	17	30
		254JM	TEFC	**JMFSWDM23994T-E**	12,328	WDF	25.67	265	91	230/460	16.5	
	1800	254JM	TEFC	**JMFSWDM23933T-E**	12,162	WDF	25.67	286	92.4	230/460	17.5	30
20	3600	256JM	TEFC	**JMFSWDM41906T-E**	13,882	WDF	26.67	300	91	230/460	21.5	
	1800	256JM	TEFC	**JMFSWDM23934T-E**	13,814	WDF	26.67	295	93	230/460	23.4	

(a) See notes on inside back flap.

Food Safe IEC stainless steel, three phase, totally enclosed, encapsulated 50/60Hz, 400/460VY

0.18 kW-7.5 kW (0.25-10 Hp)

IP69 for Water

Features:

- Stainless steel AISI 304
- Epoxy encapsulated windings
- IE3 efficiency per IEC 60034-30-1 (2014) (80 frame and above) All motors are compliant with DOE and NRCan
- Complies with EU MEPS/EcoDesign Regulation (EU) 2019/1781 effective July 2021. CE marked.
- Heat stabilized bearings with H1 food grade grease
- Laser engraved nameplate
- Inverter ready
- Rotatable terminal box cover with F3 mounting

Applications:

- Food processing
- Pumps and Wastewater
- Outdoors
- High pressure washdown
- Caustic environment

kW // Hp*	RPM	IEC Frame	Enclosure	Catalog Number	ABB Product Code	ABB Type Number	List Price	Disc. Sym.	"L" Dim. (in)	Aprx. Wt. (lb)	Notes (a)
IM B3 (1001), foot mounted											
0.18 // 0.24	1000/1200	71	IC410/TENV	**SSEWDM07186-B**	3GMA073310-ASB	M3MA 71MA 6	2,977	IFS	12.20	33	
0.25 // 0.33	1500/1800	71	IC410/TENV	**SSEWDM07254-B**	3GMA072320-ASB	M3MA 71MB 4	2,939	IFS	12.20	44	
	1000/1200	71	IC410/TENV	**SSEWDM07256-B**	3GMA073320-ASB	M3MA 71MB 6	3,113	IFS	12.20	35	
0.37 // 0.5	1500/1800	80	IC410/TENV	**SSEWDM08374-B**	3GMA082310-ASB	M3MA 80MA 4	2,977	IFS	13.94	51	
	1000/1200	80	IC410/TENV	**SSEWDM08376-B**	3GMA083310-ASB	M3MA 80MA 6	3,219	IFS	13.94	51	
0.55 // 0.73	3000/3600	80	IC410/TENV	**SSEWDM08552-B**	3GMA081310-ASB	M3MA 80MA 2	2,977	IFS	13.94	51	
	1500/1800	80	IC410/TENV	**SSEWDM08554-B**	3GMA082320-ASB	M3MA 80MB 4	3,113	IFS	13.94	51	
	1000/1200	90	IC410/TENV	**SSEWDM09556-B**	3GMA093310-ASB	M3MA 90MA 6	3,541	IFS	17.15	106	
0.75 // 1	3000/3600	80	IC410/TENV	**SSEWDM08752-B**	3GMA081320-ASB	M3MA 80MB 2	3,113	IFS	13.94	51	
	1500/1800	80	IC410/TENV	**SSEWDM08754-B**	3GMA082330-ASB	M3MA 80MC 4	3,219	IFS	13.94	51	
	1000/1200	90	IC410/TENV	**SSEWDM09756-B**	3GMA093320-ASB	M3MA 90MB 6	3,891	IFS	17.15	115	
1.1 // 1.5	3000/3600	80	IC410/TENV	**SSEWDM08112-B**	3GMA081330-ASB	M3MA 80MC 2	3,219	IFS	13.94	51	
	1500/1800	90	IC410/TENV	**SSEWDM09114-B**	3GMA092310-ASB	M3MA 90MA 4	3,541	IFS	17.15	106	
1.5 // 2	3000/3600	90	IC410/TENV	**SSEWDM09152-B**	3GMA091310-ASB	M3MA 90MA 2	3,929	IFS	17.15	115	
	1500/1800	90	IC410/TENV	**SSEWDM09154-B**	3GMA092320-ASB	M3MA 90MB 4	3,891	IFS	17.15	115	
	1000/1200	100	IC411/TEFC	**SSEWDM10156-B**	3GMA103510-ASB	M3MA 100LA 6	5,441	IFS	18.92	128	
2.2 // 3	3000/3600	90	IC410/TENV	**SSEWDM09222-B**	3GMA091320-ASB	M3MA 90MA 2	4,119	IFS	17.15	115	
	1500/1800	100	IC411/TEFC	**SSEWDM10224-B**	3GMA102510-ASB	M3MA 100LA 4	4,986	IFS	18.92	126	
	1000/1200	112	IC411/TEFC	**SSEWDM11226-B**	3GMA113510-ASB	M3MA 112LA 6	6,196	IFS	18.92	130	
3 // 4	3000/3600	100	IC411/TEFC	**SSEWDM10032-B**	3GMA101510-ASB	M3MA 100LA 2	5,441	IFS	18.92	133	
	1500/1800	100	IC411/TEFC	**SSEWDM10034-B**	3GMA102520-ASB	M3MA 100LB 4	5,441	IFS	18.92	126	
	1000/1200	132	IC411/TEFC	**SSEWDM13036-B**	3GMA133510-ASB	M3MA 132LA 6	7,254	IFS	22.81	148	
4 // 5	3000/3600	112	IC411/TEFC	**SSEWDM11042-B**	3GMA111510-ASB	M3MA 112MA 2	6,196	IFS	18.92	134	
	1500/1800	112	IC411/TEFC	**SSEWDM11044-B**	3GMA112510-ASB	M3MA 112LA 4	6,196	IFS	18.92	134	
	1000/1200	132	IC411/TEFC	**SSEWDM13046-B**	3GMA133520-ASB	M3MA 132LB 6	7,632	IFS	22.81	148	
5.5 // 7.3	3000/3600	132	IC411/TEFC	**SSEWDM13552-B**	3GMA131510-ASB	M3MA 132LA 2	7,254	IFS	22.81	152	
	1500/1800	132	IC411/TEFC	**SSEWDM13554-B**	3GMA132510-ASB	M3MA 132LA 4	7,254	IFS	22.81	161	
7.5 // 10	3000/3600	132	IC411/TEFC	**SSEWDM13752-B**	3GMA131520-ASB	M3MA 132LB 2	7,632	IFS	22.81	165	
	1500/1800	132	IC411/TEFC	**SSEWDM13754-B**	3GMA132520-ASB	M3MA 132LB 4	7,632	IFS	22.81	181	
IM B5 (3001), flange mounted, footless											
0.18 // 0.24	1000/1200	71	IC410/TENV	**SSEWDM07186D-B**	3GMA073310-BSB	M3MA 71MA 6	2,803	IFS	12.20	33	
0.25 // 0.33	1500/1800	71	IC410/TENV	**SSEWDM07254D-B**	3GMA072320-BSB	M3MA 71MB 4	2,761	IFS	12.20	44	
	1000/1200	71	IC410/TENV	**SSEWDM07256D-B**	3GMA073320-BSB	M3MA 71MB 6	2,943	IFS	12.20	35	
0.37 // 0.5	1500/1800	80	IC410/TENV	**SSEWDM08374D-B**	3GMA082310-BSB	M3MA 80MA 4	2,803	IFS	13.94	51	
	1000/1200	80	IC410/TENV	**SSEWDM08376D-B**	3GMA083310-BSB	M3MA 80MA 6	3,034	IFS	13.94	51	
0.55 // 0.73	3000/3600	80	IC410/TENV	**SSEWDM08552D-B**	3GMA081310-BSB	M3MA 80MA 2	2,803	IFS	13.94	51	
	1500/1800	80	IC410/TENV	**SSEWDM08554D-B**	3GMA082320-BSB	M3MA 80MB 4	2,943	IFS	13.94	51	
	1000/1200	90	IC410/TENV	**SSEWDM09556D-B**	3GMA093310-BSB	M3MA 90MA 6	3,333	IFS	17.15	106	

(a) See notes on inside back flap.
* Motors are stamped with kW only. Motors are usable at 230VD, 60Hz
3 year warranty

Food Safe IEC stainless steel, three phase, totally enclosed, encapsulated

kW // Hp*	RPM	IEC Frame	Enclosure	Catalog Number	ABB Product Code	ABB Type Number	List Price	Disc. Sym.	"L" Dim. (in)	Aprx. Wt. (lb)	Notes (a)
IM B5 (3001), flange mounted, footless (continued)											
0.75 // 1	3000/3600	80	IC410/TENV	**SSEWDM08752D-B**	3GMA081320-BSB	M3MA 80MB 2	2,943	IFS	13.94	51	
	1500/1800	80	IC410/TENV	**SSEWDM08754D-B**	3GMA082330-BSB	M3MA 80MC 4	3,034	IFS	13.94	51	
	1000/1200	90	IC410/TENV	**SSEWDM09756D-B**	3GMA093320-BSB	M3MA 90MB 6	3,642	IFS	17.15	115	
1.1 // 1.5	3000/3600	80	IC410/TENV	**SSEWDM08112D-B**	3GMA081330-BSB	M3MA 80MC 2	3,034	IFS	13.94	51	
	1500/1800	90	IC410/TENV	**SSEWDM09114D-B**	3GMA092310-BSB	M3MA 90MA 4	3,333	IFS	17.15	106	
1.5 // 2	3000/3600	90	IC410/TENV	**SSEWDM09152D-B**	3GMA091310-BSB	M3MA 90MA 2	3,687	IFS	17.15	115	
	1500/1800	90	IC410/TENV	**SSEWDM09154D-B**	3GMA092320-BSB	M3MA 90MB 4	3,642	IFS	17.15	115	
	1000/1200	100	IC411/TEFC	**SSEWDM10156D-B**	3GMA103510-BSB	M3MA 100LA 6	5,138	IFS	18.92	128	
2.2 // 3	3000/3600	90	IC410/TENV	**SSEWDM09222D-B**	3GMA091320-BSB	M3MA 90MA 2	3,891	IFS	17.15	115	
	1500/1800	100	IC411/TEFC	**SSEWDM10224D-B**	3GMA102510-BSB	M3MA 100LA 4	4,685	IFS	18.92	126	
	1000/1200	112	IC411/TEFC	**SSEWDM11226D-B**	3GMA113510-BSB	M3MA 112LA 6	5,855	IFS	18.92	130	
3 // 4	3000/3600	100	IC411/TEFC	**SSEWDM10032D-B**	3GMA101510-BSB	M3MA 100LA 2	5,138	IFS	18.92	133	
	1500/1800	100	IC411/TEFC	**SSEWDM10034D-B**	3GMA102520-BSB	M3MA 100LB 4	5,138	IFS	18.92	126	
	1000/1200	132	IC411/TEFC	**SSEWDM13036D-B**	3GMA133510-BSB	M3MA 132LA 6	6,801	IFS	22.81	148	
4 // 5	3000/3600	112	IC411/TEFC	**SSEWDM11042D-B**	3GMA111510-BSB	M3MA 112MA 2	5,855	IFS	18.92	134	
	1500/1800	112	IC411/TEFC	**SSEWDM11044D-B**	3GMA112510-BSB	M3MA 112LA 4	5,855	IFS	18.92	134	
	1000/1200	132	IC411/TEFC	**SSEWDM13046D-B**	3GMA133520-BSB	M3MA 132LB 6	7,216	IFS	22.81	148	
5.5 // 7.3	3000/3600	132	IC411/TEFC	**SSEWDM13552D-B**	3GMA131510-BSB	M3MA 132LA 2	6,801	IFS	22.81	152	
	1500/1800	132	IC411/TEFC	**SSEWDM13554D-B**	3GMA132510-BSB	M3MA 132LA 4	6,801	IFS	22.81	161	
7.5 // 10	3000/3600	132	IC411/TEFC	**SSEWDM13752D-B**	3GMA131520-BSB	M3MA 132LB 2	7,216	IFS	22.81	165	
	1500/1800	132	IC411/TEFC	**SSEWDM13754D-B**	3GMA132520-BSB	M3MA 132LB 4	7,216	IFS	22.81	181	
IM B14 (3601), face mounted, footless											
0.18 // 0.24	1000/1200	71	IC410/TENV	**SSEWDM07186C-B**	3GMA073310-CSB	M3MA 71MA 6	2,803	IFS	12.20	33	
0.25 // 0.33	1500/1800	71	IC410/TENV	**SSEWDM07254C-B**	3GMA072320-CSB	M3MA 71MB 4	2,761	IFS	12.20	44	
	1000/1200	71	IC410/TENV	**SSEWDM07256C-B**	3GMA073320-CSB	M3MA 71MB 6	2,943	IFS	12.20	35	
0.37 // 0.5	1500/1800	80	IC410/TENV	**SSEWDM08374C-B**	3GMA082310-CSB	M3MA 80MA 4	2,803	IFS	13.94	51	
	1000/1200	80	IC410/TENV	**SSEWDM08376C-B**	3GMA083310-CSB	M3MA 80MA 6	3,034	IFS	13.94	51	
0.55 // 0.73	3000/3600	80	IC410/TENV	**SSEWDM08552C-B**	3GMA081310-CSB	M3MA 80MA 2	2,803	IFS	13.94	51	
	1500/1800	80	IC410/TENV	**SSEWDM08554C-B**	3GMA082320-CSB	M3MA 80MB 4	2,943	IFS	13.94	51	
	1000/1200	90	IC410/TENV	**SSEWDM09556C-B**	3GMA093310-CSB	M3MA 90MA 6	3,333	IFS	17.15	106	
0.75 // 1	3000/3600	80	IC410/TENV	**SSEWDM08752C-B**	3GMA081320-CSB	M3MA 80MB 2	2,943	IFS	13.94	51	
	1500/1800	80	IC410/TENV	**SSEWDM08754C-B**	3GMA082330-CSB	M3MA 80MC 4	3,034	IFS	13.94	51	
	1000/1200	90	IC410/TENV	**SSEWDM09756C-B**	3GMA093320-CSB	M3MA 90MB 6	3,642	IFS	17.15	115	
1.1 // 1.5	3000/3600	80	IC410/TENV	**SSEWDM08112C-B**	3GMA081330-CSB	M3MA 80MC 2	3,034	IFS	13.94	51	
	1500/1800	90	IC410/TENV	**SSEWDM09114C-B**	3GMA092310-CSB	M3MA 90MA 4	3,333	IFS	17.15	106	
1.5 // 2	3000/3600	90	IC410/TENV	**SSEWDM09152C-B**	3GMA091310-CSB	M3MA 90MA 2	3,687	IFS	17.15	115	
	1500/1800	90	IC410/TENV	**SSEWDM09154C-B**	3GMA092320-CSB	M3MA 90MB 4	3,642	IFS	17.15	115	
	1000/1200	100	IC411/TEFC	**SSEWDM10156C-B**	3GMA103510-CSB	M3MA 100LA 6	5,138	IFS	18.92	128	
2.2 // 3	3000/3600	90	IC410/TENV	**SSEWDM09222C-B**	3GMA091320-CSB	M3MA 90MA 2	3,891	IFS	17.15	115	
	1500/1800	100	IC411/TEFC	**SSEWDM10224C-B**	3GMA102510-CSB	M3MA 100LA 4	4,685	IFS	18.92	126	
	1000/1200	112	IC411/TEFC	**SSEWDM11226C-B**	3GMA113510-CSB	M3MA 112LA 6	5,855	IFS	18.92	130	
3 // 4	3000/3600	100	IC411/TEFC	**SSEWDM10032C-B**	3GMA101510-CSB	M3MA 100LA 2	5,138	IFS	18.92	133	
	1500/1800	100	IC411/TEFC	**SSEWDM10034C-B**	3GMA102520-CSB	M3MA 100LB 4	5,138	IFS	18.92	126	
	1000/1200	132	IC411/TEFC	**SSEWDM13036C-B**	3GMA133510-CSB	M3MA 132LA 6	6,801	IFS	22.81	148	
4 // 5	3000/3600	112	IC411/TEFC	**SSEWDM11042C-B**	3GMA111510-CSB	M3MA 112MA 2	5,855	IFS	18.92	134	
	1500/1800	112	IC411/TEFC	**SSEWDM11044C-B**	3GMA112510-CSB	M3MA 112LA 4	5,855	IFS	18.92	134	
	1000/1200	132	IC411/TEFC	**SSEWDM13046C-B**	3GMA133520-CSB	M3MA 132LB 6	7,216	IFS	22.81	148	
5.5 // 7.3	3000/3600	132	IC411/TEFC	**SSEWDM13552C-B**	3GMA131510-CSB	M3MA 132LA 2	6,801	IFS	22.81	152	
	1500/1800	132	IC411/TEFC	**SSEWDM13554C-B**	3GMA132510-CSB	M3MA 132LA 4	6,801	IFS	22.81	161	
7.5 // 10	3000/3600	132	IC411/TEFC	**SSEWDM13752C-B**	3GMA131520-CSB	M3MA 132LB 2	7,216	IFS	22.81	165	
	1500/1800	132	IC411/TEFC	**SSEWDM13754C-B**	3GMA132520-CSB	M3MA 132LB 4	7,216	IFS	22.81	181	

(a) See notes on inside back flap.
* Motors are stamped with kW only.
Motors are usable at 230VD, 60Hz
3 year warranty

Stainless steel, three phase, totally enclosed, C-Face, foot mounted

1/3 thru 20 Hp

IP56

Features:

- 300 series stainless steel motor frame, endplates, conduit box, shaft, base, and hardware
- Four condensate drains in each endplate
- Endplate rabbets sealed
- Labyrinth seals on DE and ODE
- 3 year warranty

Applications:

- Food processing
- Packaging
- Pumps and wastewater
- Wet environment

Hp	RPM	NEMA Frame	Enclosure	Catalog Number	List Price	Disc. Sym.	"C" Dim.	Aprx. Wt. (lb)	Full Load Efficiency	Voltage	Full Load Amps	Notes (a)
230/460 volt												
1/3	3600	56C	TENV	**CSSWDM3457**	1,736	WDS	11.09	33	74	208-230/460	0.6	1, 30
	1800	56C	TENV	**CSSWDM3534**	1,826	WDS	11.09	33	75.5	208-230/460	0.7	1, 12, 30
1/2	3600	56C	TENV	**CSSWDM3537**	2,050	WDS	11.09	36	70	208-230/460	0.9	1, 30
		56HC	TENV	**CSSWDM3537-H**	2,050	WDS	11.97	37	70	208-230/460	0.9	1
	1800	56C	TENV	**CSSWDM3538**	2,200	WDS	11.09	37	80	208-230/460	0.9	1, 12, 30
		56HC	TENV	**CSSWDM3538-H**	2,200	WDS	11.97	33	80	208-230/460	0.9	1
	1200	56HC	TENV	**CSSWDM3539-H**	2,373	WDS	11.97	37	77	208-230/460	0.9	1
3/4	3600	56C	TENV	**CSSWDM3541**	2,119	WDS	11.09	43	80	230/460	1.1	1, 12, 30
		56HC	TENV	**CSSWDM3541-H**	2,119	WDS	11.97	34	80	230/460	1.1	1,12
	1800	56C	TENV	**CSSWDM3542**	2,277	WDS	11.09	42	82.5	208-230/460	1.1	1, 12, 30
		56HC	TENV	**CSSWDM3542-H**	2,277	WDS	11.97	34	82.5	208-230/460	1.1	1,12
	1200	56HC	TENV	**CSSWDM3543-H**	2,575	WDS	11.97	51	82.5	230/460	1.3	1,12
1	3600	56C	TENV	**CESSWDM3545**	2,323	WDS	11.09	39	82.5	230/460	1.4	12
		56HC	TENV	**CESSWDM3545-H**	2,323	WDS	11.97	38	82.5	230/460	1.4	12
	1800	56C	TENV	**CESSWDM3546**	2,314	WDS	11.09	41	85.5	230/460	1.5	1, 30
		56HC	TENV	**CESSWDM3546-H**	2,314	WDS	11.97	41	85.5	230/460	1.5	
		143TC	TEFC	**CESSWDM3546T**	2,348	WDS	13.42	52	87.5	230/460	1.5	1, 30
	1200	56HC	TENV	**CESSWDNM3556-H**	2,620	WDS	14.22	64	84	230/460	1.7	1,30
1 1/2	3600	56C	TENV	**CESSWDM3550**	2,337	WDS	12.97	56	85.5	230/460	1.8	1, 30
		56HC	TENV	**CESSWDM3550-H**	2,337	WDS	12.85	50	85.5	230/460	1.8	1,30
		143TC	TENV	**CESSWDM3550T**	2,356	WDS	13.23	60	85.5	230/460	1.8	1, 30
	1800	56C	TEFC	**CESSWDM3554**	2,358	WDS	13.34	41	86.5	230/460	2.2	1, 30
		56HC	TEFC	**CESSWDM3554-H**	2,358	WDS	13.03	45	86.5	230/460	2.2	1,30
		145TC	TEFC	**CESSWDM3554T**	2,393	WDS	13.42	55	87.5	230/460	2.1	1, 30
2	3600	56HC	TENV	**CESSWDNM3555-H**	3,114	WDS	12.85	61	88.5	230/460	2.4	
		145TC	TEFC	**CESSWDM3555T**	2,855	WDS	14.30	60	86.5	208-230/460	2.5	1, 30
	1800	56C	TEFC	**CESSWDM3558**	2,841	WDS	13.34	45	86.5	230/460	2.8	8, 30
		56HC	TEFC	**CESSWDM3558-H**	2,841	WDS	13.03	45	86.5	230/460	2.8	
		145TC	TEFC	**CESSWDM3558T**	2,875	WDS	13.42	45	86.5	230/460	2.8	8, 30
3	3600	145TC	TEFC	**CESSWDM3559T**	3,440	WDS	15.67	74	86.5	208-230/460	3.7	1, 30
		182TC	TEFC	**CESSWDM3610T**	3,674	WDS	16.82	90	88.5	230/460	3.7	1, 30
	1800	182TC	TEFC	**CESSWDM3611T**	3,361	WDS	18.32	94	89.5	230/460	4.2	1, 30
5	3600	184TC	TEFC	**CESSWDM3613T**	3,909	WDS	18.32	106	90.2	230/460	5.7	30
	1800	184TC	TEFC	**CESSWDM3615T**	3,782	WDS	18.32	112	89.5	230/460	6.5	
7 1/2	3600	213TC	TEFC	**CESSWDM3709T**	4,588	WDS	19.03	166	91	230/460	8.3	1, 30
	1800	213TC	TEFC	**CESSWDM3710T**	4,731	WDS	20.16	137	91.7	230/460	9.5	1
10	3600	215TC	TEFC	**CESSWDM3711T**	5,119	WDS	20.16	184	91.7	230/460	10.6	1, 30
	1800	215TC	TEFC	**CESSWDM3714T**	5,218	WDS	21.66	190	92.4	230/460	12.5	1, 30
15	3600	215TC	TEFC	**CESSWDM3713T**	7,682	WDS	21.66	187	91.7	230/460	17	8,30
		254TC	TEFC	**CESSWDM23994T**	10,448	WDS	24.67	293	91	230/460	16.5	1, 30
	1800	254TC	TEFC	**CESSWDM23933T**	10,283	WDS	24.67	293	92.4	230/460	17.5	1, 30
20	3600	256TC	TEFC	**CESSWDM41906T**	11,993	WDS	24.67	312	91	230/460	21.5	2
	1800	256TC	TEFC	**CESSWDM23934T**	11,925	WDS	24.67	299	93	230/460	24	8

(a) See notes on inside back flap
Red catalog number indicates **NEW** product.

Stainless steel, three phase, totally phase, C-Face, foot mounted

Hp	RPM	NEMA Frame	Enclosure	Catalog Number	List Price	Disc. Sym.	"C" Dim.	Aprx. Wt. (lb)	Full Load Efficiency	Voltage	Full Load Amps	Notes (a)
575 volt												
1/2	1800	56C	TENV	**CSSWDM3538-5**	2,200	WDS	11.09	37	80	575	0.7	1, 12
3/4	1800	56C	TENV	**CSSWDM3542-5**	2,277	WDS	11.09	41	82.5	575	0.9	1, 12
1	1800	56C	TENV	**CESSWDM3546-5**	2,314	WDS	11.09	46	85.5	575	1.2	
	1800	143TC	TEFC	**CESSWDM3546T-5**	2,348	WDS	13.42	51	87.5	575	1.3	1
1 1/2	3600	56C	TENV	**CESSWDM3550-5**	2,337	WDS	12.96	50	85.5	575	1.5	
	1800	145TC	TEFC	**CESSWDM3554T-5**	2,393	WDS	13.42	56	87.5	575	1.7	1
2	3600	145TC	TENV	**CESSWDNM3555T-5**	2,855	WDS	14.60	61	88.5	575	1.9	8
	1800	56C	TENV	**CESSWDNM3558-5**	2,841	WDS	14.34	63	87.5	575	2.1	8
		145TC	TEFC	**CESSWDM3558T-5**	2,875	WDS	13.42	45	86.5	575	2.3	8
3	3600	145TC	TEFC	**CESSWDM3559T-5**	3,440	WDS	15.67	73	86.5	575	2.9	1
		182TC	TENV	**CESSWDNM3610T-5**	3,674	WDS	19.82	96	89.5	575	2.8	8
	1800	182TC	TENV	**CESSWDNM3611T-5**	3,361	WDS	19.82	101	89.5	575	3.2	8
		182TC	TEFC	**CESSWDM3611T-5**	3,361	WDS	16.82	92	89.5	575	3.3	1
5	3600	184TC	TEFC	**CESSWDM3613T-5**	3,909	WDS	18.32	106	90.2	575	4.6	
	1800	184TC	TEFC	**CESSWDM3615T-5**	3,782	WDS	18.32	112	89.5	575	5.2	
7 1/2	3600	213TC	TEFC	**CESSWDM3709T-5**	4,588	WDS	19.03	129	91	575	6.7	
	1800	213TC	TEFC	**CESSWDM3710T-5**	4,731	WDS	20.16	139	91.7	575	7.6	
10	3600	215TC	TEFC	**CESSWDM3711T-5**	5,119	WDS	20.16	154	91.7	575	8.5	1
	1800	215TC	TEFC	**CESSWDM3714T-5**	5,218	WDS	21.66	185	91.7	575	9.8	1
15	1800	254TC	TEFC	**CESSWDM23933T-5**	10,283	WDS	24.67	281	92.4	575	14.2	

(a) See notes on inside back flap.
Red catalog number indicates **NEW** product.

Stainless steel, three phase, totally enclosed, C-Face, footless

1/3 thru 10 Hp

IP56

Features:

- 300 series stainless steel motor frame, endplates, conduit box, shaft, base, and hardware
- Four condensate drains in each endplate
- Endplate rabbets sealed
- Labyrinth seals on DE and ODE
- 3 year warranty

Applications:

- Food processing
- Packaging
- Pumps and wastewater
- Wet environment

Hp	RPM	NEMA Frame	Enclosure	Catalog Number	List Price	Disc. Sym.	"C" Dim.	Aprx. Wt. (lb)	Full Load Efficiency	Voltage	Full Load Amps	Notes (a)
230/460 volt												
1/3	3600	56C	TENV	**VSSWDM3457**	1,685	WDS	11.09	33	74	208-230/460	0.6	1, 10, 30
	1800	56C	TENV	**VSSWDM3534**	1,775	WDS	11.09	35	75.5	208-230/460	0.7	1,10,12,30
1/2	3600	56C	TENV	**VSSWDM3537**	2,001	WDS	11.09	37	70	208-230/460	0.9	2, 10, 30
	1800	56C	TEFC	**VSSFWDM3538**	2,277	WDS	12.34	40	80	208-230/460	0.9	1,10,12,30
		56C	TENV	**VSSWDM3538**	2,154	WDS	11.09	40	84	230/460	0.9	1, 10, 12, 30
3/4	3600	56C	TENV	**VSSWDM3541**	2,078	WDS	11.09	41	80	230/460	1.1	1, 10, 12, 30
	1800	56C	TEFC	**VSSFWDM3542**	2,351	WDS	12.34	44	82.5	208-230/460	1.1	1, 10
		56C	TENV	**VSSWDM3542**	2,233	WDS	11.09	42	82.5	208-230/460	1.1	1, 10
1	1800	56C	TENV	**VESSWDM3546**	2,254	WDS	12.09	44	85.5	230/460	1.5	1,30
		56C	TEFC	**VESSFWDM3546**	2,485	WDS	13.34	39	85.5	230/460	1.5	
		143TC	TEFC	**VESSWDM3546T**	2,289	WDS	13.42	44	87.5	230/460	1.5	1,30
1 1/2	1800	56C	TEFC	**VESSWDM3554**	2,299	WDS	13.34	46	86.5	230/460	2.2	1,30
		145TC	TEFC	**VESSWDM3554T**	2,333	WDS	13.42	45	87.5	230/460	2.1	1,30
2	1800	56C	TEFC	**VESSWDM3558**	2,781	WDS	13.34	48	86.5	230/460	2.8	8, 30
		145TC	TEFC	**VESSWDM3558T**	2,816	WDS	13.42	45	86.5	230/460	2.8	8, 30
3	3600	145TC	TEFC	**VESSWDM3559T**	3,346	WDS	15.67	64	86.5	208-230/460	3.7	1, 30
	1800	182TC	TEFC	**VESSWDM3611T**	3,213	WDS	18.32	60	89.5	230/460	4.2	1,30
5	3600	184TC	TEFC	**VESSWDM3613T**	3,761	WDS	18.32	83	90.2	230/460	5.7	30
	1800	184TC	TEFC	**VESSWDM3615T**	3,634	WDS	18.32	101	89.5	230/460	6.5	30
7 1/2	1800	213TC	TEFC	**VESSWDM3710T**	4,601	WDS	20.16	139	91.7	230/460	9.5	1
10	1800	215TC	TEFC	**VESSWDM3714T**	5,088	WDS	21.66	188	92.4	230/460	12.5	1,30
575 volt												
1	1800	56C	TENV	**VESSWDM3546-5**	2,254	WDS	12.09	39	85.5	575	1.2	
1 1/2	1800	145TC	TEFC	**VESSWDM3554T-5**	2,333	WDS	13.42	45	87.5	575	1.7	1
2	3600	56C	TEFC	**VESSWDM3555-5**	2,725	WDS	14.22	41	86.5	575	2.0	1
	1800	145TC	TEFC	**VESSWDM3558T-5**	2,816	WDS	15.67	56	88.5	575	2.2	8
3	1800	182TC	TEFC	**VESSWDM3611T-5**	3,213	WDS	18.32	83	89.5	575	3.3	1
5	1800	184TC	TEFC	**VESSWDM3615T-5**	3,634	WDS	18.32	112	89.5	575	5.1	1
10	1800	215TC	TEFC	**VESSWDM3714T-5**	5,088	WDS	21.66	191	92.4	575	10.1	1

(a) See notes on inside back flap.
Red catalog number indicates **NEW** product.

Paint free, three phase, totally enclosed, C-Face

1/2 thru 10 Hp

IP55

Features:

- Sealed ball bearings
- Neoprene gaskets
- Rotating non-contact labyrinth seal
- 300 series stainless steel motor frame, base, shaft and hardware
- No exterior paint
- 3 year warranty

Applications:

- Food processing
- Packaging
- Outdoor applications

Hp	RPM	NEMA Frame	Enclosure	Catalog Number	List Price	Disc. Sym.	"C" Dim.	Aprx. Wt. (lb)	Full Load Efficiency	Voltage	Full Load Amps	Notes (a)
Foot mounted												
1/2	3600	56C	TENV	**CSWDM3537**	1,204	WDP	11.06	29	70	208-230/460	0.9	2, 30
	1800	56C	TENV	**CSWDM3538**	1,177	WDP	11.06	27	80	230/460	0.8	1, 12, 30
	1200	56C	TENV	**CSWDM3539**	1,647	WDP	12.06	38	78.5	208-230/460	1	1, 12, 30
3/4	3600	56C	TENV	**CSWDM3541**	1,263	WDP	11.06	36	80	208-230/460	1.1	1, 12, 30
	1800	56C	TENV	**CSWDM3542**	1,359	WDP	11.06	30	78.5	230/460	1.4	1, 12, 30
	1200	56C	TENV	**CSWDM3543**	1,988	WDP	12.94	47	81.5	208-230/460	1.4	30
1	1800	56C	TENV	**CESWDM3546**	1,894	WDP	12.06	40	85.5	230/460	1.5	1, 30
		143TC	TENV	**CESWDM3546T**	1,853	WDP	12.12	39	87.5	230/460	1.5	1, 30
1 1/2	1800	56C	TENV	**CESWDM3554**	1,933	WDP	12.94	50	86.5	230/460	2.1	30
		145TC	TENV	**CESWDM3554T**	1,984	WDP	13.00	50	86.5	230/460	2.1	30
2	3600	145TC	TEFC	**CESWDM3555T**	2,350	WDP	14.16	52	86.5	208-230/460	2.5	1, 30
	1800	56C	TEFC	**CESWDM3558**	2,287	WDP	13.24	45	86.5	230/460	2.9	1, 30
		145TC	TEFC	**CESWDM3558T**	2,435	WDP	15.54	56	88.5	230/460	2.8	1, 30
3	3600	145TC	TEFC	**CESWDM3559T**	2,892	WDP	15.54	62	86.5	208-230/460	3.7	1, 30
	1800	182TC	TEFC	**CESWDM3611T**	2,979	WDP	16.56	79	89.5	230/460	4	1, 30
5	3600	184TC	TEFC	**CESWDM3613T**	3,667	WDP	18.06	88	90.2	230/460	5.7	30
	1800	184TC	TEFC	**CESWDM3615T**	3,466	WDP	18.06	92	89.5	230/460	6.7	1, 30
7 1/2	3600	213TC	TEFC	**CESWDM3709T**	4,629	WDP	18.68	134	91	230/460	8.3	1, 30
	1800	213TC	TEFC	**CESWDM3710T**	4,265	WDP	19.81	135	91.7	230/460	9.5	1
10	3600	215TC	TEFC	**CESWDM3711T**	5,131	WDP	19.81	154	91.7	230/460	10.6	1, 30
	1800	215TC	TEFC	**CESWDM3714T**	4,853	WDP	21.31	165	91.7	230/460	12	1
Footless												
1/2	1800	56C	TENV	**VSWDM3538**	1,164	WDP	11.06	28	80	230/460	0.8	1, 12, 30
3/4	1800	56C	TENV	**VSWDM3542**	1,347	WDP	11.06	31	78.5	230/460	1.4	1, 12, 30
1	1800	56C	TENV	**VESWDM3546**	1,803	WDP	12.06	39	85.5	230/460	1.5	1, 30
		143TC	TENV	**VESWDM3546T**	1,810	WDP	12.12	43	87.5	230/460	1.5	1, 30
1 1/2	1800	56C	TENV	**VESWDM3554**	1,963	WDP	12.95	47	86.5	230/460	2.1	30
		145TC	TENV	**VESWDM3554T**	1,963	WDP	13.00	49	86.5	230/460	2.1	30
2	1800	145TC	TEFC	**VESWDM3558T**	2,241	WDP	15.56	55	88.5	230/460	2.8	1, 30

(a) See notes on inside back flap.

NEW!

Paint free, three phase, totally enclosed, C-Face, 575 volt

1/2 thru 2 Hp

IP55

Features:

- Sealed ball bearings
- Neoprene gaskets
- Rotating non-contact labyrinth seal
- 300 series stainless steel motor frame, base, shaft and hardware
- No exterior paint
- 3 year warranty

Applications:

- Food processing
- Packaging
- Outdoor applications

Hp	RPM	NEMA Frame	Enclosure	Catalog Number	List Price	Disc. Sym.	"C" Dim.	Aprx. Wt. (lb)	Full Load Efficiency	Voltage	Full Load Amps	Notes (a)
Foot mounted												
1/2	3600	56C	TENV	**CSWDM3537-5**	1,204	WDP	11.06	37	70	575	0.65	2, 10
	1800	56C	TENV	**CSWDM3538-5**	1,177	WDP	11.06	33	80	575	0.7	1, 10, 12
3/4	3600	56C	TENV	**CSWDM3541-5**	1,263	WDP	11.06	39	80	575	0.9	10, 12
	1800	56C	TENV	**CSWDM3542-5**	1,359	WDP	11.06	30	78.5	575	1.1	1, 10, 12
1	1800	56C	TENV	**CESWDM3546-5**	1,894	WDP	12.06	39	85.5	575	1.2	10
		143TC	TENV	**CESWDM3546T-5**	1,853	WDP	12.12	39	85.5	575	1.2	10
1 1/2	1800	56C	TENV	**CESWDM3554-5**	1,933	WDP	12.93	47	86.5	575	1.7	10
		145TC	TENV	**CESWDM3554T-5**	1,984	WDP	12.99	47	86.5	575	1.7	10
2	1800	56C	TENV	**CESWDNM3558-5**	2,287	WDP	14.31	56	88.5	575	2.1	10
Footless												
1/2	1800	56C	TENV	**VSWDM3538-5**	1,164	WDP	11.06	33	80	575	0.7	1, 10, 12
3/4	1800	56C	TENV	**VSWDM3542-5**	1,347	WDP	11.06	37	78.5	575	1.1	1, 10, 12
1	1800	56C	TENV	**VESWDM3546-5**	1,803	WDP	12.06	39	85.5	575	1.2	10
		143TC	TENV	**VESWDM3546T-5**	1,810	WDP	12.12	39	85.5	575	1.2	10
1 1/2	1800	56C	TENV	**VESWDM3554-5**	1,963	WDP	12.93	57	86.5	575	1.7	10
		145TC	TENV	**VESWDM3554T-5**	1,963	WDP	12.99	47	86.5	575	1.7	10
2	1800	145TC	TENV	**VESWDNM3558T-5**	2,235	WDP	14.37	62	88.5	575	2.1	10

(a) See notes on inside back flap.
Red catalog number indicates **NEW** product.

Inverter Duty motor, paint free, three phase, totally enclosed, C-Face

1/2 thru 10 Hp

IP55

Features:

- Sealed ball bearings
- Neoprene gaskets
- Rotating non-contact labyrinth seal
- 300 series stainless steel motor frame, base, shaft and hardware
- No exterior paint
- Class H insulation
- NEMA Premium® efficiency
- Not encoder adaptable
- 3 year warranty

Applications:

- Conveyors
- Food processing
- Pumps
- Packaging
- Outdoor applications

Hp	Base Speed RPM	Max. RPM	NEMA Frame	Enclosure	Catalog Number	List Price	Disc. Sym.	"C" Dim.	Aprx. Wt. (lb)	Full Load Efficiency	Voltage	Full Load Amps	Notes (a)
Foot mounted													
1/2	1800	6000	56C	TENV	**IDCSWDM3538**	2,554	WDP	11.06	31	82.5	208-230/460	0.8	30
3/4	1800	6000	56C	TENV	**IDCSWDM3542**	2,892	WDP	11.06	32	82.5	208-230/460	1.1	30
1	1800	6000	56C	TENV	**IDCSWDM3546**	3,002	WDP	12.06	40	85.5	208-230/460	1.5	30
			143TC	TENV	**IDCSWDM3546T**	3,002	WDP	12.12	42	85.5	230/460	1.5	
1 1/2	1800	4000	56C	TEFC	**IDCSWDM3554**	3,211	WDP	14.12	51	88.5	230/460	2.1	
			145TC	TEFC	**IDCSWDM3554T**	3,211	WDP	14.17	49	88.5	230/460	2.1	
2	1800	4500	56C	TEFC	**IDCSWDM3558**	3,430	WDP	13.24	44	86.5	230/460	2.9	
			145TC	TEFC	**IDCSWDM3558T**	3,430	WDP	13.29	48	86.5	230/460	2.9	
3	1800	6000	182TC	TEFC	**IDCSWDM3611T**	3,761	WDP	18.06	85	89.5	230/460	4.2	
5	1800	6000	184TC	TEFC	**IDCSWDM3615T**	4,377	WDP	18.06	99	89.5	230/460	6.5	
7 1/2	1800	6000	213TC	TEFC	**IDCSWDM3710T**	6,626	WDP	19.81	136	91.7	230/460	9.5	
10	1800	6000	215TC	TEFC	**IDCSWDM3714T**	7,576	WDP	21.31	187	92.4	230/460	12.5	
Footless													
1/2	1800	6000	56C	TENV	**IDVSWDM3538**	2,533	WDP	11.06	32	84	230/460	0.9	
3/4	1800	6000	56C	TENV	**IDVSWDM3542**	2,878	WDP	11.06	35	82.5	230/460	1.1	
1	1800	6000	56C	TENV	**IDVSWDM3546**	2,987	WDP	12.06	40	85.5	230/460	1.5	
			143TC	TENV	**IDVSWDM3546T**	2,987	WDP	12.12	40	85.5	230/460	1.5	
1 1/2	1800	4000	56C	TEFC	**IDVSWDM3554**	3,195	WDP	14.12	50	88.5	230/460	2.1	
			145TC	TEFC	**IDVSWDM3554T**	3,195	WDP	14.17	50	88.5	230/460	2.1	
2	1800	4500	56C	TEFC	**IDVSWDM3558**	3,402	WDP	13.24	45	86.5	230/460	2.9	
			145TC	TEFC	**IDVSWDM3558T**	3,402	WDP	13.29	46	86.5	230/460	2.9	
3	1800	6000	182TC	TEFC	**IDVSWDM3611T**	3,577	WDP	18.06	80	89.5	230/460	4.2	
5	1800	6000	184TC	TEFC	**IDVSWDM3615T**	4,169	WDP	18.06	97	89.5	230/460	6.5	

(a) See notes on inside back flap.

Single phase, totally enclosed, foot mounted

1/2 thru 1 1/2 Hp

IP55

Features:

- 300 series stainless steel hardware
- Neoprene gaskets
- Double sealed ball bearings
- Lip and V-Ring seal on DE
- White epoxy, corrosion resistant finish
- Stainless steel shaft extension

Applications:

- Food processing
- Wet environment
- Packaging
- Pumps and wastewater

Hp	RPM	NEMA Frame	Enclosure	Catalog Number	List Price	Disc. Sym.	"C" Dim.	Aprx. Wt. (lb)	Full Load Efficiency	Voltage	Full Load Amps	Notes (a)
1/2	1800	56	TEFC	**WDL3504**	1,024	WDW	12.23	34	68	115/230	3.7	1, 12, 30
3/4	1800	56	TEFC	**WDL3507**	1,199	WDW	12.23	37	68	115/230	5.5	1, 12, 30
1	1800	56	TEFC	**WDL3510**	1,386	WDW	13.23	41	67	115/230	6.4	1, 30
1 1/2	1800	145T	TEFC	**WDL3514T**	1,708	WDW	14.18	50	80	115/230	6.2	1, 30

(a) See notes on inside back flap.

Single phase, totally enclosed, C-Face

1/2 thru 1 1/2 Hp

IP55

Features:

- 300 series stainless steel hardware
- Neoprene gaskets
- Double sealed ball bearings
- Lip and V-Ring seal on DE
- White epoxy, corrosion resistant finish
- Stainless steel shaft extension

Applications:

- Food processing
- Wet environment
- Packaging
- Pumps and wastewater

Hp	RPM	NEMA Frame	Enclosure	Catalog Number	List Price	Disc. Sym.	"C" Dim.	Aprx. Wt. (lb)	Full Load Efficiency	Voltage	Full Load Amps	Notes (a)
Foot mounted												
1/2	1800	56C	TEFC	**CWDL3504**	1,072	WDW	12.23	35	68	115/230	3.7	1, 12, 30
3/4	1800	56C	TEFC	**CWDL3507**	1,248	WDW	12.23	36	68	115/230	5.5	1, 12, 30
1	3600	56C	TEFC	**CWDL3509**	1,169	WDW	12.23	37	68	115/230	5.9	1, 12, 30
	1800	56C	TEFC	**CWDL3510**	1,434	WDW	13.23	41	67	115/230	6.4	1, 30
1 1/2	3600	56C	TEFC	**CWDL3513**	1,444	WDW	13.23	41	70	115/230	8	1, 30
	1800	56C	TEFC	**CWDL3514**	1,717	WDW	14.12	50	80	115/230	6.2	1, 30
Footless												
1/2	1800	56C	TEFC	**VWDL3504**	1,028	WDW	12.25	35	68	115/230	3.7	1, 12, 30
3/4	1800	56C	TEFC	**VWDL3507**	1,207	WDW	12.25	36	68	115/230	5.5	1, 12, 30
1	1800	56C	TEFC	**VWDL3510**	1,382	WDW	13.25	42	67	115/230	6.4	1, 30
1 1/2	1800	56C	TEFC	**VWDL3514**	1,658	WDW	14.10	48	80	115/230	6.2	1, 30

(a) See notes on inside back flap.

Three phase, totally enclosed, foot mounted

1/2 thru 20 Hp

IP55

Features:

- 300 series stainless steel hardware
- Neoprene gaskets
- Double sealed ball bearings
- Lip and V-Ring seal on DE
- White epoxy, corrosion resistant finish
- Stainless steel shaft extension
- 3 year warranty

Applications:

- Food processing
- Wet environment
- Conveyors
- Packaging
- Pumps and wastewater

Hp	RPM	NEMA Frame	Enclosure	Catalog Number	List Price	Disc. Sym.	"C" Dim.	Aprx. Wt. (lb)	Full Load Efficiency	Voltage	Full Load Amps	Notes (a)
1/2	1800	56	TENV	**WDM3538**	1,023	WDW	11.06	27	80	230/460	0.8	1, 12, 30
3/4	1800	56	TENV	**WDM3542**	1,093	WDW	11.06	30	78.5	230/460	1.4	1, 12, 30
1	3600	143T	TENV	**EWDM3545T**	1,447	WDW	11.12	35	82.5	230/460	1.3	1
	1800	56	TENV	**EWDM3546**	1,490	WDW	12.06	39	85.5	230/460	1.5	1, 30
		143T	TENV	**EWDM3546T**	1,526	WDW	12.12	39	85.5	230/460	1.5	1, 30
	1200	145T	TEFC	**EWDM3556T**	1,754	WDW	13.29	41	82.5	230/460	1.8	1
	900	182T	TEFC	**EWDM3617T**	2,890	WDW	16.54	65	75.5	230/460	2.3	1
1 1/2	3600	143T	TENV	**EWDM3550T**	1,495	WDW	12.12	48	85.5	230/460	2	
	1800	145T	TENV	**EWDM3554T**	1,678	WDW	13.00	49	86.5	230/460	2.1	30
	1200	182T	TEFC	**EWDM3607T**	1,940	WDW	16.54	91	87.5	230/460	2.4	1
	900	184T	TEFC	**EWDM3618T**	3,395	WDW	18.04	95	78.5	230/460	3	1
2	3600	145T	TEFC	**EWDM3555T**	1,885	WDW	14.17	50	86.5	230/460	2.5	1
	1800	145T	TEFC	**EWDM3558T**	1,969	WDW	13.29	46	86.5	230/460	2.9	1, 30
	1200	184T	TEFC	**EWDM3614T**	2,174	WDW	18.04	100	88.5	230/460	3.5	1
	900	213T	TEFC	**EWDM3702T**	4,746	WDW	19.04	111	85.5	230/460	3.5	1
3	3600	182T	TEFC	**EWDM3610T**	2,053	WDW	15.17	50	86.5	230/460	3.6	1
	1800	182T	TEFC	**EWDM3611T**	2,458	WDW	16.54	73	89.5	230/460	4.2	1, 30
	1200	213T	TEFC	**EWDM3704T**	2,819	WDW	19.04	139	89.5	230/460	4.6	1
	900	215T	TEFC	**EWDM3705T**	5,243	WDW	19.04	111	86.5	230/460	5.2	1
5	3600	184T	TEFC	**EWDM3613T**	2,962	WDW	16.54	74	88.5	230/460	5.9	1
	1800	184T	TEFC	**EWDM3615T**	2,798	WDW	18.04	90	89.5	230/460	6.7	1, 30
	1200	215T	TEFC	**EWDM3708T**	3,188	WDW	20.54	185	89.5	230/460	7.2	1
7 1/2	3600	213T	TEFC	**EWDM3709T**	4,146	WDW	19.04	129	91.7	230/460	9.5	1
	1800	213T	TEFC	**EWDM3710T**	3,502	WDW	19.04	151	91.7	230/460	9.5	1, 30
	1200	254T	TEFC	**EWDM22976T**	6,050	WDW	23.57	265	91	230/460	10.7	1
10	3600	215T	TEFC	**EWDM3711T**	4,387	WDW	17.89	123	90.2	230/460	11.6	1
	1800	215T	TEFC	**EWDM3714T**	3,815	WDW	20.54	165	91.7	230/460	12	1
	1200	256T	TEFC	**EWDM23932T**	6,939	WDW	24.57	276	91	230/460	14.7	30
15	3600	254T	TEFC	**EWDM23994T**	8,365	WDW	22.32	169	91	230/460	15.3	1
	1800	254T	TEFC	**EWDM23933T**	8,228	WDW	23.57	248	92.4	230/460	18	1, 30
20	3600	256T	TEFC	**EWDM41906T**	9,643	WDW	23.57	242	91	230/460	23	
	1800	256T	TEFC	**EWDM23934T**	9,589	WDW	23.57	269	93	230/460	24	1, 30

(a) See notes on inside back flap.
Red catalog number indicates **NEW** product.

Three phase, totally enclosed, C-Face, foot mounted

1/3 thru 20 Hp

IP55

Features:

- 300 series stainless steel hardware
- Neoprene gaskets
- Double sealed ball bearings
- Lip and V-Ring seal on DE
- White epoxy, corrosion resistant finish
- Stainless steel shaft extension
- 3 year warranty

Applications:

- Food processing
- Wet environment
- Conveyors
- Packaging
- Pumps and wastewater

Hp	RPM	NEMA Frame	Enclosure	Catalog Number	List Price	Disc. Sym.	"C" Dim.	Aprx. Wt. (lb)	Full Load Efficiency	Voltage	Full Load Amps	Notes (a)
1/3	1800	56C	TENV	**CWDM3534**	891	WDW	11.06	33	75.5	208-230/460	0.7	1
1/2	3600	56C	TENV	**CWDM3537**	995	WDW	11.06	29	70	208-230/460	0.9	1, 12
		56HC	TENV	**CWDM3537-H**	995	WDW	11.91	37	70	208-230/460	0.9	1, 12
	1800	56C	TENV	**CWDM3538**	1,077	WDW	11.06	28	80	230/460	0.8	1, 12, 30
		56HC	TENV	**CWDM3538-H**	1,077	WDW	11.91	33	80	230/460	0.8	1, 12
	1200	56C	TENV	**CWDM3539**	1,360	WDW	12.06	37	78.5	208-230/460	1	1, 12
		56HC	TENV	**CWDM3539-H**	1,360	WDW	11.91	37	78.5	208-230/460	1	1, 12
3/4	3600	56C	TENV	**CWDM3541**	1,042	WDW	11.07	35	80	230/460	1.1	1, 12, 30
		56HC	TENV	**CWDM3541-H**	1,042	WDW	11.91	34	80	230/460	1.1	1, 12
	1800	56C	TENV	**CWDM3542**	1,167	WDW	11.07	29	78.5	230/460	1.4	1, 12, 30
		56HC	TENV	**CWDM3542-H**	1,167	WDW	11.91	30	78.5	230/460	1.4	1, 12, 30
	1200	56C	TENV	**CWDM3543**	1,642	WDW	12.94	46	80	208-230/460	1.4	1
		56HC	TENV	**CWDM3543-H**	1,642	WDW	12.78	45	81.5	208-230/460	1.4	
1	3600	56C	TEFC	**CEWDM3545**	1,711	WDW	12.24	33	77	230/460	1.4	1, 12
		56C	TENV	**CEWDNM3545**	1,615	WDW	11.06	35	82.5	230/460	1.3	
		56HC	TENV	**CEWDNM3545-H**	1,615	WDW	11.91	35	82.5	230/460	1.3	1, 12, 30
		143TC	TENV	**CEWDM3545T**	1,675	WDW	12.12	35	82.5	230/460	1.3	1
	1800	56C	TENV	**CEWDM3546**	1,719	WDW	12.06	41	85.5	230/460	1.5	30
		56HC	TENV	**CEWDM3546-H**	1,719	WDW	11.91	39	85.5	230/460	1.5	1, 30
		143TC	TENV	**CEWDM3546T**	1,754	WDW	12.13	37	85.5	230/460	1.5	30
	1200	56C	TEFC	**CEWDM3556**	1,930	WDW	13.24	43	82.5	230/460	1.8	1, 30
		56HC	TEFC	**CEWDM3556-H**	1,930	WDW	13.08	41	82.5	230/460	1.8	1
		145TC	TEFC	**CEWDM3556T**	1,981	WDW	13.28	41	82.5	230/460	1.8	1
	900	182TC	TEFC	**CEWDM3617T**	3,089	WDW	16.54	65	75.5	230/460	2.3	1, 30
1 1/2	3600	56C	TENV	**CEWDM3550**	1,759	WDW	12.07	46	85.5	230/460	2	1, 30
		56HC	TENV	**CEWDM3550-H**	1,759	WDW	11.91	48	85.5	230/460	2	1
		143TC	TENV	**CEWDM3550T**	1,797	WDW	12.12	48	85.5	230/460	2	1
	1800	56C	TENV	**CEWDM3554**	1,798	WDW	12.94	50	86.5	230/460	2.1	30
		56HC	TENV	**CEWDM3554-H**	1,798	WDW	12.78	56	86.5	230/460	2.1	
		145TC	TENV	**CEWDM3554T**	1,836	WDW	13.00	48	86.5	230/460	2.1	30
	1200	182TC	TEFC	**CEWDM3607T**	2,139	WDW	16.54	72	87.5	230/460	2.4	1, 30
	900	184TC	TEFC	**CEWDM3618T**	3,595	WDW	18.04	101	78.5	230/460	3	1
2	3600	56HCY	TEFC	**CEWDM3555**	1,902	WDW	13.24	35	85.5	230/460	2.5	1, 30
		56HC	TEFC	**CEWDM3555-H**	1,902	WDW	13.08	41	85.5	230/460	2.5	1
		145TC	TEFC	**CEWDM3555T**	1,940	WDW	13.28	45	85.5	230/460	2.5	1, 30
	1800	56C	TEFC	**CEWDM3558**	1,961	WDW	14.12	48	86.5	230/460	2.9	1, 30
		56HC	TEFC	**CEWDM3558-H**	1,961	WDW	13.96	48	86.5	230/460	2.9	1, 30
		145TC	TEFC	**CEWDM3558T**	2,024	WDW	13.28	46	86.5	230/460	2.9	1, 30
		145TC	TENV	**CEWDNM3558T**	1,976	WDW	14.37	54	88.5	230/460	2.7	1, 30
	1200	184TC	TEFC	**CEWDM3614T**	2,373	WDW	18.04	93	88.5	230/460	3.5	1, 30
	900	213TC	TEFC	**CEWDM3702T**	5,054	WDW	19.78	111	85.5	230/460	3.5	1

(a) See notes on inside back flap.
Red catalog number indicates **NEW** product.

Three phase, totally enclosed, C-Face, foot mounted

Hp	RPM	NEMA Frame	Enclosure	Catalog Number	List Price	Disc. Sym.	"C" Dim.	Aprx. Wt. (lb)	Full Load Efficiency	Voltage	Full Load Amps	Notes (a)
3	3600	145TC	TEFC	**CEWDM3559T**	2,389	WDW	14.17	60	86.5	230/460	3.6	1, 30
		182TC	TEFC	**CEWDM3610T**	2,253	WDW	15.18	57	86.5	230/460	3.6	1, 30
	1800	182TC	TEFC	**CEWDM3611T**	2,658	WDW	16.54	78	89.5	230/460	4.2	1, 30
	1200	213TC	TEFC	**CEWDM3704T**	3,127	WDW	19.78	136	89.5	230/460	4.6	1, 30
	900	215TC	TEFC	**CEWDM3705T**	5,758	WDW	19.78	111	86.5	230/460	5.2	1
5	3600	184TC	TEFC	**CEWDM3613T**	3,162	WDW	16.54	80	88.5	230/460	5.9	1, 30
	1800	184TC	TEFC	**CEWDM3615T**	3,012	WDW	18.04	96	89.5	230/460	6.7	1, 30
	1200	215TC	TEFC	**CEWDM3708T**	3,703	WDW	21.27	185	89.5	230/460	7.2	1, 30
7 1/2	3600	184TC	TEFC	**CEWDM3616T**	3,758	WDW	18.04	101	89.5	230/460	8.4	1, 30
		213TC	TEFC	**CEWDM3709T**	4,454	WDW	18.64	143	89.5	230/460	9	1, 30
	1800	213TC	TEFC	**CEWDM3710T**	3,810	WDW	19.78	151	91.7	230/460	9.5	1, 30
	1200	254TC	TEFC	**CEWDM22976T**	6,358	WDW	23.57	280	91	230/460	11	1, 30
10	3600	215TC	TEFC	**CEWDM3711T**	4,902	WDW	18.64	122	90.2	230/460	11.8	1, 30
	1800	215TC	TEFC	**CEWDM3714T**	4,331	WDW	21.27	165	91.7	230/460	12	1
	1200	256TC	TEFC	**CEWDM23932T**	7,227	WDW	23.57	289	91	230/460	15.1	30
15	3600	215TC	TEFC	**CEWDM3713T**	6,160	WDW	21.26	174	91	230/460	17	1, 30
		254TC	TEFC	**CEWDM23994T**	8,653	WDW	21.89	188	91	230/460	16.6	1, 30
	1800	254TC	TEFC	**CEWDM23933T**	8,517	WDW	23.57	256	92.4	230/460	18	1, 30
20	3600	256TC	TEFC	**CEWDM41906T**	9,931	WDW	23.57	274	91	230/460	23	1
	1800	256TC	TEFC	**CEWDM23934T**	9,877	WDW	23.57	283	93	230/460	24	1, 30

(a) See notes on inside back flap.
Red catalog number indicates **NEW** product.

Three phase, totally enclosed, C-Face, footless

1/3 thru 10 Hp

IP55

Features:

- 300 series stainless steel hardware
- Neoprene gaskets
- Double sealed ball bearings
- Lip and V-Ring seal on DE
- White epoxy, corrosion resistant finish
- Stainless steel shaft extension
- 3 year warranty

Applications:

- Food processing
- Wet environment
- Conveyors
- Packaging
- Pumps and wastewater

Hp	RPM	NEMA Frame	Enclosure	Catalog Number	List Price	Disc. Sym.	"C" Dim.	Aprx. Wt. (lb)	Full Load Efficiency	Voltage	Full Load Amps	Notes (a)
1/3	1800	56C	TENV	**VWDM3534**	855	WDW	11.06	33	75.5	208-230/460	0.7	1, 12
1/2	1800	56C	TENV	**VEWDM3538**	1,429	WDW	11.06	32	84	230/460	0.9	1, 30
		56C	TEFC	**VFWDM3538**	1,116	WDW	12.24	29	80	230/460	0.8	1, 12, 30
		56C	TENV	**VWDM3538**	1,069	WDW	11.06	29	80	230/460	0.8	1, 12, 30
3/4	1800	56C	TENV	**VEWDM3542**	1,573	WDW	11.06	32	84	230/460	1.1	1, 12, 30
		56C	TEFC	**VFWDM3542**	1,207	WDW	12.24	31	78.5	230/460	1.4	1, 12, 30
		56C	TENV	**VWDM3542**	1,161	WDW	11.06	33	80	230/460	1.2	1, 12
1	1800	56C	TEFC	**VEFWDM3546**	1,749	WDW	12.22	38	85.5	230/460	1.5	1, 30
		56C	TENV	**VEWDM3546**	1,703	WDW	12.06	40	85.5	230/460	1.5	1, 30
		143TC	TEFC	**VEFWDM3546T**	1,762	WDW	12.30	36	85.5	230/460	1.5	1, 30
		143TC	TENV	**VEWDM3546T**	1,716	WDW	12.12	40	85.5	230/460	1.5	1, 30
1 1/2	1800	56C	TENV	**VEWDM3554**	1,828	WDW	12.94	48	86.5	230/460	2.1	30
		145TC	TEFC	**VEFWDM3554T**	1,890	WDW	13.28	43	86.5	230/460	2.2	1, 30
		145TC	TENV	**VEWDM3554T**	1,843	WDW	13.00	48	86.5	230/460	2.1	30
2	1800	56C	TEFC	**VEWDM3558**	1,945	WDW	13.22	46	86.5	230/460	2.9	1, 30
		145TC	TEFC	**VEWDM3558T**	1,983	WDW	13.28	47	86.5	230/460	2.9	1, 30
3	3600	56C	TEFC	**VEWDM3559**	2,253	WDW	14.12	50	86.5	230/460	3.6	1, 30
		145TC	TEFC	**VEWDM3559T**	2,274	WDW	14.17	50	86.5	230/460	3.6	1, 30
	1800	56C	TEFC	**VEWDM3561**	2,172	WDW	15.61	73	89.5	230/460	4.2	1, 30
		145TC	TEFC	**VEWDM3561T**	2,197	WDW	15.68	73	89.5	230/460	4.2	1, 30
		145TC	TENV	**VEWDM3651T**	2,510	WDW	15.63	91	89.5	230/460	4.1	1, 30
		182TC	TEFC	**VEWDM3611T**	2,491	WDW	16.54	73	89.5	230/460	4.2	1, 30
5	1800	184TC	TEFC	**VEWDM3615T**	2,824	WDW	18.05	89	89.5	230/460	6.7	1, 30
7 1/2	1800	213TC	TEFC	**VEWDM3710T**	3,777	WDW	19.78	151	91.7	230/460	9.5	1, 30
10	1800	215TC	TEFC	**VEWDM3714T**	4,059	WDW	21.27	165	91.7	230/460	12	1, 30

(a) See notes on inside back flap.
Red catalog number indicates **NEW** product.

Three phase, totally enclosed, C-Face, 575 volt

1/2 thru 20 Hp

IP55

Features:

- 300 series stainless steel hardware
- Neoprene gaskets
- Double sealed ball bearings
- Lip and V-Ring seal on DE
- White epoxy, corrosion resistant finish
- Stainless steel shaft extension
- 3 year warranty

Applications:

- Food processing
- Wet environment
- Conveyors
- Packaging
- Pumps and wastewater

Hp	RPM	NEMA Frame	Enclosure	Catalog Number	List Price	Disc. Sym.	"C" Dim.	Aprx. Wt. (lb)	Full Load Efficiency	Voltage	Full Load Amps	Notes (a)
Foot mounted												
1/2	1800	56C	TENV	**CWDM3538-5**	1,077	WDW	11.07	26	80	575	0.7	1, 12
3/4	1800	56C	TENV	**CWDM3542-5**	1,167	WDW	11.06	35	78.5	575	1.1	1, 12
1	1800	56C	TENV	**CEWDM3546-5**	1,719	WDW	12.06	39	85.5	575	1.2	
		143TC	TENV	**CEWDM3546T-5**	1,754	WDW	12.12	38	85.5	575	1.2	
1 1/2	1800	145TC	TENV	**CEWDM3554T-5**	1,836	WDW	13.00	46	86.5	575	1.7	1
2	1800	145TC	TEFC	**CEWDM3558T-5**	2,024	WDW	13.28	46	86.5	575	2.3	1
3	3600	145TC	TEFC	**CEWDM3559T-5**	2,389	WDW	14.17	52	86.5	575	2.9	1
	1800	182TC	TEFC	**CEWDM3611T-5**	2,658	WDW	16.54	77	89.5	575	3.3	1
5	3600	184TC	TEFC	**CEWDM3613T-5**	3,162	WDW	16.54	70	88.5	575	4.7	1
	1800	184TC	TEFC	**CEWDM3615T-5**	3,012	WDW	18.04	94	89.5	575	5.3	1
7 1/2	3600	213TC	TEFC	**CEWDM3709T-5**	4,454	WDW	19.78	143	91	575	7	10
	1800	213TC	TEFC	**CEWDM3710T-5**	3,810	WDW	19.78	130	91.7	575	7.6	1
10	3600	215TC	TEFC	**CEWDM3711T-5**	4,902	WDW	18.64	122	90.2	575	9.5	10
	1800	215TC	TEFC	**CEWDM3714T-5**	4,331	WDW	21.27	165	91.7	575	9.6	1
15	1800	254TC	TEFC	**CEWDM23933T-5**	8,517	WDW	23.57	258	92.4	575	14.5	1
20	1800	256TC	TEFC	**CEWDM23934T-5**	9,877	WDW	23.57	289	93	575	19	1
Footless												
1/2	1800	56C	TENV	**VWDM3538-5**	1,069	WDW	11.06	28	80	575	0.7	1, 12
3/4	1800	56C	TENV	**VWDM3542-5**	1,161	WDW	11.06	32	80	575	0.9	1, 12

(a) See notes on inside back flap.
Red catalog number indicates **NEW** product.

Feather Picker motor, three phase, TEFC, encapsulated, foot mounted
2 thru 3 Hp

IP56

Features:
- Labyrinth seal on DE and ODE
- Epoxy encapsulated windings
- Stainless steel hardware, shaft extension, nameplate
- Neoprene gaskets
- Double sealed ball bearings
- White epoxy, corrosion resistant finish

Applications:
- Feather picker
- Food processing
- Wet environment

Hp	RPM	NEMA Frame	Catalog Number	List Price	Disc. Sym.	"C" Dim.	Aprx. Wt. (lb)	Full Load Efficiency	Voltage	Full Load Amps	Notes (a)
2	1800	145T	**WDM3558TP**	1,951	WDW	14.24	39	81.5	230/460	2.9	30, 31
3	1800	145T	**WDM3561TP**	2,396	WDW	15.63	59	81	230/460	4	2, 8, 31

(a) See notes on inside back flap.

Feather Picker motor, three phase, TEFC, encapsulated, C-Face, foot mounted
3 Hp

IP56

Features:
- Labyrinth seal on DE and ODE
- Epoxy encapsulated windings
- Stainless steel hardware, shaft extension, nameplate
- Neoprene gaskets
- Double sealed ball bearings
- White epoxy, corrosion resistant finish

Applications:
- Feather picker
- Food processing
- Wet environment

Hp	RPM	NEMA Frame	Catalog Number	List Price	Disc. Sym.	"C" Dim.	Aprx. Wt. (lb)	Full Load Efficiency	Voltage	Full Load Amps	Notes (a)
230/460 volt											
3	1800	145TC	**CWDM3561TP**	2,458	WDW	15.62	59	81	230/460	4	2, 8, 31
575 volt											
3	1800	145TC	**CWDM3561TP-5**	2,458	WDW	15.54	59	81	575	3.2	2, 8, 31

(a) See notes on inside back flap.
Red catalog number indicates **NEW** product.

Cut Saw motor, three phase, TENV, foot mounted

1 Hp

IP56

Features:

- Labyrinth seal
- Fully potted leads inside conduit box
- Stainless steel hardware, shaft extension, nameplate
- Neoprene gaskets
- Double sealed ball bearings
- White epoxy, corrosion resistant finish

Applications:

- Poultry cut saw
- Food processing
- Wet environment

Hp	RPM	NEMA Frame	Catalog Number	List Price	Disc. Sym.	"C" Dim.	Aprx. Wt. (lb)	Full Load Efficiency	Voltage	Full Load Amps	Notes (a)
1	1800	D80	**WDNMM3546-4**	1,523	WDW	12.00	39	75.5	460	1.5	2, 31

(a) See notes on inside back flap.

Brake motor, three phase, totally enclosed, C-Face, foot mounted

1/2 thru 5 Hp

IP55

Features:

- 300 series stainless steel hardware
- Neoprene gaskets
- Double sealed ball bearings
- Power off manual release brake with automatic reset
- Lip and V-Ring seal on DE
- NEMA Premium® efficiency
- White epoxy, corrosion resistant finish
- Stainless steel shaft extension
- Standard NEMA BA dimension

Applications:

- Food processing
- Wet environment
- Conveyors
- Packaging
- Pumps and wastewater

Hp	RPM	NEMA Frame	Enclosure	Catalog Number	List Price	Disc. Sym.	"C" Dim.	Aprx. Wt. (lb)	Full Load Efficiency	Voltage	Full Load Amps	Brake Rating (b)	Notes (a)
1/2	1800	56C	TENV	**CEWDBM3538**	3,435	WDW	15.31	42	84	208-230/460	0.9	3	1, 12, 41
3/4	1800	56C	TENV	**CEWDBM3542**	3,712	WDW	15.31	42	84	230/460	1.1	6	1, 12, 30, 41
1	1800	56C	TENV	**CEWDBM3546**	3,810	WDW	16.31	50	85.5	230/460	1.5	6	1, 30, 41
		143TC	TENV	**CEWDBM3546T**	3,736	WDW	16.81	51	85.5	230/460	1.5	6	1, 30, 41
1 1/2	1800	145TC	TENV	**CEWDBM3554T**	4,146	WDW	18.14	61	86.5	230/460	2.1	10	30, 41
2	1800	145TC	TEFC	**CEWDBM3558T**	4,219	WDW	18.56	60	86.5	230/460	2.9	10	1, 30, 41
3	1800	182TC	TEFC	**CEWDBM3611T**	5,105	WDW	21.80	93	89.5	230/460	4.2	15	1, 30, 41
5	1800	184TC	TEFC	**CEWDBM3615T**	6,167	WDW	23.30	110	89.5	230/460	6.7	25	1, 30, 42

(a) See notes on inside back flap.
(b) Brake torque rating in lb-ft.

Jet pump, three phase, TEFC, C-Face

3/4 thru 3 Hp

IP55

Features:

- 300 series stainless steel hardware and shaft extension
- Neoprene gaskets
- Double sealed ball bearings
- Lip and V-Ring seal on DE
- White epoxy, corrosion resistant finish
- Easy removable drain plugs

Applications:

- Food processing
- Wet environment
- Pumps and wastewater

Hp	RPM	NEMA Frame	Catalog Number	List Price	Disc. Sym.	"C" Dim.	Aprx. Wt. (lb)	Full Load Efficiency	Voltage	Full Load Amps	Notes (a)
Footless											
3/4	3600	56J	**JWDM3463**	1,097	WDW	12.72	33	68	208-230/460	1.4	1, 30
1	3600	56J	**JEWDM3545**	1,732	WDW	12.72	38	78.5	208-230/460	1.6	1, 30
1 1/2	3600	56J	**JEWDM3550**	1,829	WDW	13.72	41	84	208-230/460	2	1, 30
2	3600	56J	**JEWDM3555**	2,032	WDW	13.72	41	85.5	230/460	2.5	1, 30
3	3600	56J	**JEWDM3559**	2,409	WDW	15.97	64	87.5	208-230/460	3.5	1, 30
Foot mounted											
3/4	3600	56J	**CJWDM3463**	1,105	WDW	12.72	33	68	208-230/460	1.4	1, 30
1	3600	56J	**CJEWDM3545**	1,741	WDW	12.72	38	78.5	208-230/460	1.6	1, 30
1 1/2	3600	56J	**CJEWDM3550**	1,839	WDW	13.72	41	84	208-230/460	2	1, 30
2	3600	56J	**CJEWDM3555**	2,040	WDW	13.72	41	85.5	230/460	2.5	1, 30
3	3600	56J	**CJEWDM3559**	2,417	WDW	15.98	64	87.5	208-230/460	3.5	1, 30

(a) See notes on inside back flap.

Close-coupled pump, three phase, totally enclosed, foot mounted

1 thru 20 Hp

IP55

Features:

- Oversized, double sealed ball bearings
- Locked DE bearing
- Neoprene gaskets
- Lip and V-Ring seal on DE
- NEMA Premium® efficiency
- White epoxy, corrosion resistant finish
- 300 series stainless steel hardware and shaft extension

Applications:

- Water pumps commercial and industrial
- Food processing
- Wet environment

Hp	RPM	NEMA Frame	Enclosure	Catalog Number	List Price	Disc. Sym.	"C" Dim.	Aprx. Wt. (lb)	Full Load Efficiency	Voltage	Full Load Amps	Notes (a)
1	3600	143JM	TENV	**JMEWDM3545T**	1,800	WDW	15.41	35	84	230/460	1.4	1
	1800	143JM	TENV	**JMEWDM3546T**	1,879	WDW	14.25	39	85.5	230/460	1.5	1, 30
1 1/2	3600	143JM	TENV	**JMEWDM3550T**	1,889	WDW	14.28	48	85.5	208-230/460	2	1, 30
	1800	145JM	TENV	**JMEWDM3554T**	1,963	WDW	15.16	50	86.5	230/460	2.1	30
2	3600	145JM	TEFC	**JMEWDM3555T**	2,062	WDW	15.43	47	85.5	208-230/460	2.5	1, 30
	1800	145JM	TEFC	**JMEWDM3558T**	2,149	WDW	16.34	48	86.5	230/460	2.9	1, 30
3	3600	145JM	TEFC	**JMEWDM3559T**	2,518	WDW	16.31	50	86.5	230/460	3.6	1, 30
	1800	182JM	TEFC	**JMEWDM3611T**	2,819	WDW	18.05	70	89.5	230/460	4.2	1, 30
5	3600	184JM	TEFC	**JMEWDM3613T**	3,323	WDW	18.05	81	88.5	230/460	5.6	1, 30
		184JM	TEFC	**JMEWDM3613T-5**	3,323	WDW	18.05	74	88.5	575	4.7	10
	1800	184JM	TEFC	**JMEWDM3615T**	3,175	WDW	19.55	93	89.5	230/460	6.7	1, 30
7 1/2	3600	184JM	TEFC	**JMEWDM3616T**	3,937	WDW	19.55	96	89.5	230/460	8.4	1, 30
	1800	213JM	TEFC	**JMEWDM3710T**	3,990	WDW	20.91	151	91.7	230/460	9.5	1, 30
10	3600	215JM	TEFC	**JMEWDM3711T**	5,083	WDW	20.91	130	90.2	208-230/460	10.8	1, 30
	1800	215JM	TEFC	**JMEWDM3714T**	4,242	WDW	22.41	165	91.7	230/460	12	1, 30
15	3600	215JM	TEFC	**JMEWDM3713T**	6,341	WDW	21.64	169	91	230/460	17	1, 30
	1800	254JM	TEFC	**JMEWDM23933T**	8,765	WDW	25.06	252	92.4	230/460	18	1, 30
20	3600	256JM	TEFC	**JMEWDM41906T**	10,176	WDW	25.06	255	91	230/460	23	2
	1800	256JM	TEFC	**JMEWDM23934T**	10,129	WDW	25.06	275	93	230/460	24	1, 30

(a) See notes on inside back flap.
Red catalog number indicates **NEW** product.

Inverter Duty motor, three phase, TENV, C-Face, foot mounted
1 thru 10 Hp

IP55

Features:
- Inverter Duty 1000:1 CT
- Encoder mounting provisions
- Class H insulation
- Thermostats
- 300 series stainless steel hardware
- Neoprene gaskets
- Double sealed ball bearings
- Lip and V-Ring seal on DE
- NEMA Premium® efficiency
- White epoxy, corrosion resistant finish
- Stainless steel shaft extension
- 3 year warranty

Applications:
- Food processing
- Wet environment
- Conveyors
- Packaging
- Pumps and wastewater

Hp	Base Speed RPM	Max. RPM	NEMA Frame	Catalog Number	List Price	Disc. Sym.	"C" Dim.	Aprx. Wt. (lb)	Full Load Efficiency	Voltage	Full Load Amps	Notes (a)
1	1800	6000	143TC	**IDWNM3546T**	2,554	WDW	14.90	41	85.5	230/460	1.5	
1 1/2	1800	4500	145TC	**IDWNM3554T**	2,813	WDW	15.78	52	86.5	230/460	2.1	
2	1800	6000	182TC	**IDWNM3609T**	3,316	WDW	17.77	77	88.5	230/460	2.9	
3	1800	6000	184TC	**IDWNM3611T**	3,376	WDW	19.27	90	89.5	230/460	4.1	
5	1800	4000	213TC	**IDWNM3707T**	3,820	WDW	19.84	122	89.5	230/460	6.7	
7 1/2	1800	5000	254TC	**IDWNM22937T**	6,804	WDW	23.92	283	91.7	230/460	8.9	
10	1800	5000	254TC	**IDWNM22938T**	6,929	WDW	23.92	287	91.7	230/460	12	

(a) See notes on inside back flap.
1000:1 Constant torque speed range

Vector Duty motor, three phase, TENV, C-Face, foot mounted
1 thru 10 Hp

IP55

Features:
- Inverter Duty 1000:1 CT
- HS25 Encoder mounted
- Class H insulation
- Thermostats
- 300 series stainless steel hardware
- Neoprene gaskets
- Double sealed ball bearings
- Lip and V-Ring seal on DE
- NEMA Premium® efficiency
- White epoxy, corrosion resistant finish
- Stainless steel shaft extension
- 3 year warranty

Applications:
- Material handling
- Food processing
- Wet environment
- Conveyors
- Packaging

Hp	Base Speed RPM	Max. RPM	NEMA Frame	Catalog Number	List Price	Disc. Sym.	"C" Dim.	Aprx. Wt. (lb)	Full Load Efficiency	Voltage	Full Load Amps	Notes (a)
1	1800	6000	143TC	**ZDWNM3546T**	5,116	WDW	14.90	44	85.5	230/460	1.5	
1 1/2	1800	4500	145TC	**ZDWNM3554T**	5,375	WDW	15.78	56	86.5	230/460	2.1	
2	1800	6000	182TC	**ZDWNM3609T**	5,888	WDW	17.77	71	88.5	230/460	2.9	
3	1800	6000	184TC	**ZDWNM3611T**	5,943	WDW	19.27	90	89.5	230/460	4.1	
5	1800	6000	213TC	**ZDWNM3707T**	6,386	WDW	19.84	126	89.5	230/460	6.7	
7 1/2	1800	5000	254TC	**ZDWNM22937T**	9,332	WDW	23.92	250	91.7	230/460	8.9	
10	1800	5000	254TC	**ZDWNM22938T**	9,496	WDW	23.92	286	91.7	230/460	12	

(a) See notes on inside back flap.
1000:1 Constant torque speed range

NEW!

Three phase, totally enclosed, foot mounted, washdown features

5 thru 75 Hp

IP55

Features:

- 300 series stainless steel hardware
- Neoprene gaskets
- Double sealed ball bearings
- Lip and V-Ring seal on DE
- White epoxy, corrosion resistant finish
- Stainless steel shaft extension
- Rugged cast iron construction
- 3 year warranty

Applications:

- Food processing
- Wet environment
- Conveyors
- Packaging
- Pumps and wastewater

Hp	RPM	NEMA Frame	Enclosure	Catalog Number	List Price	Disc. Sym.	"C" Dim.	Aprx. Wt. (lb)	Full Load Efficiency	Voltage	Full Load Amps	Notes (a)
5	900	254T	TEFC	**EWDM2280T**	8,375	WDW	23.07	320	86.5	230/460	12.1	1, 30
7 1/2	900	256T	TEFC	**EWDM2401T**	9,080	WDW	23.07	320	86.5	230/460	12.1	1
10	900	284T	TEFC	**EWDM2402T**	10,112	WDW	27.56	391	89.5	230/460	14.6	1, 30
15	1200	284T	TEFC	**EWDM4100T**	7,361	WDW	27.56	391	91.7	230/460	21	1
	900	286T	TEFC	**EWDM2395T**	13,498	WDW	27.56	469	89.5	230/460	23	1
20	1200	286T	TEFC	**EWDM4102T**	10,000	WDW	27.56	429	91.7	230/460	26	1
	900	324T	TEFC	**EWDM4112T**	15,388	WDW	30.28	578	90.2	230/460	30	1
25	3600	284TS	TEFC	**EWDM4107T**	7,082	WDW	24.47	265	91.7	230/460	29	1
	1800	284T	TEFC	**EWDM4103T**	6,788	WDW	27.56	437	93.6	230/460	31	1
	1200	324T	TEFC	**EWDM4111T**	10,450	WDW	30.28	605	93	230/460	32	1
	900	326T	TEFC	**EWDM4116T**	19,217	WDW	30.28	578	90.2	230/460	37	1, 30
30	3600	286TS	TEFC	**EWDM4108T**	8,633	WDW	24.47	299	91.7	230/460	34	1
	1800	286T	TEFC	**EWDM4104T**	7,909	WDW	27.56	437	93.6	230/460	38	1
	1200	326T	TEFC	**EWDM4117T**	13,471	WDW	30.28	649	93	230/460	39	1
	900	364T	TEFC	**EWDM4338T**	20,320	WDW	33.48	806	91.7	230/460	40	
40	3600	324TS	TEFC	**EWDM4109T**	11,859	WDW	28.89	470	92.4	230/460	45	1
	1800	324T	TEFC	**EWDM4110T**	10,346	WDW	30.28	601	94.1	230/460	48	1
	1200	364T	TEFC	**EWDM4308T**	17,588	WDW	33.48	910	94.1	230/460	49.8	
	900	365T	TEFC	**EWDM4348T**	23,365	WDW	33.48	910	91.7	230/460	52.9	
50	3600	326TS	TEFC	**EWDM4114T**	12,427	WDW	28.77	575	93	230/460	56	1
	1800	326T	TEFC	**EWDM4115T**	12,144	WDW	30.28	700	87	230/460	57	1
	1200	365T	TEFC	**EWDM4312T**	18,734	WDW	33.48	910	94.1	230/460	61.7	
	900	405T	TEFC	**EWDM4458T**	31,534	WDW	38.19	1216	92.4	230/460	64.3	
60	3600	364TS	TEFC	**EWDM4310T**	18,894	WDW	31.35	999	93.6	230/460	66.1	
	1800	364T	TEFC	**EWDM4314T**	17,827	WDW	33.48	961	95	230/460	70	
	1200	404T	TEFC	**EWDM4403T**	25,591	WDW	38.19	1322	94.5	230/460	69.3	
	900	405T	TEFC	**EWDM4468T**	33,765	WDW	38.19	1216	92.4	230/460	78.4	
75	3600	365TS	TEFC	**EWDM4313T**	20,354	WDW	31.35	1005	94.5	230/460	80.7	
	1800	365T	TEFC	**EWDM4316T**	19,381	WDW	33.48	965	95.4	230/460	86	
	1200	405T	TEFC	**EWDM4404T**	31,143	WDW	38.19	1322	94.5	230/460	87	
	900	444T	TEFC	**EWDM4419T**	41,689	WDW	44.97	1815	93.6	230/460	89.3	

(a) See notes on inside back flap.
Cast iron frame
Red catalog number indicates **NEW** product.

NEW!

Three phase, totally enclosed, C-Face, foot mounted, washdown features

5 thru 75 Hp

IP55

Features:

- 300 series stainless steel hardware
- Neoprene gaskets
- Double sealed ball bearings
- Lip and V-Ring seal on DE
- White epoxy, corrosion resistant finish
- Stainless steel shaft extension
- Rugged cast iron construction
- 3 year warranty

Applications:

- Food processing
- Wet environment
- Conveyors
- Packaging
- Pumps and wastewater

Hp	RPM	NEMA Frame	Enclosure	Catalog Number	List Price	Disc. Sym.	"C" Dim.	Aprx. Wt. (lb)	Full Load Efficiency	Voltage	Full Load Amps	Notes (a)
5	900	254TC	TEFC	CEWDM2280T	9,335	WDW	23.57	256	86.5	230/460	7.9	1, 30
7 1/2	900	256TC	TEFC	CEWDM2401T	10,040	WDW	23.57	320	86.5	230/460	12.1	1
10	900	284TC	TEFC	CEWDM2402T	11,387	WDW	27.56	391	89.5	230/460	14.6	1, 30
15	1200	284TC	TEFC	CEWDM4100T	8,635	WDW	27.56	447	91.7	230/460	19.4	1
	900	286TC	TEFC	CEWDM2395T	14,772	WDW	27.56	455	89.5	230/460	23	1
20	1200	286TC	TEFC	CEWDM4102T	11,275	WDW	27.56	429	91.7	230/460	26	1
	900	324TC	TEFC	CEWDM4112T	16,859	WDW	30.28	606	90.2	230/460	30	1
25	3600	284TSC	TEFC	CEWDM4107T	8,357	WDW	24.57	307	91.7	230/460	29	1
	1800	284TC	TEFC	CEWDM4103T	8,062	WDW	27.56	437	93.6	230/460	31	1
	1200	324TC	TEFC	CEWDM4111T	11,920	WDW	30.28	605	93	230/460	32	1
	900	326TC	TEFC	CEWDM4116T	20,687	WDW	30.28	606	90.2	230/460	37	1, 30
30	3600	286TSC	TEFC	CEWDM4108T	9,908	WDW	24.57	299	91.7	230/460	34	1
	1800	286TC	TEFC	CEWDM4104T	9,183	WDW	27.56	437	93.6	230/460	38	1
	1200	326TC	TEFC	CEWDM4117T	14,942	WDW	30.28	640	93	230/460	39	1
	900	364TC	TEFC	CEWDM4338T	21,919	WDW	33.48	813	91.7	230/460	40	
40	3600	324TSC	TEFC	CEWDM4109T	13,330	WDW	28.89	470	92.4	230/460	45	1
	1800	324TC	TEFC	CEWDM4110T	11,816	WDW	30.28	578	94.1	230/460	48	1
	1200	364TC	TEFC	CEWDM4308T	19,187	WDW	33.48	908	94.1	230/460	49.8	
	900	365TC	TEFC	CEWDM4348T	24,963	WDW	33.48	875	91.7	230/460	53	
50	3600	326TSC	TEFC	CEWDM4114T	13,898	WDW	28.77	575	93	230/460	56	1
	1800	326TC	TEFC	CEWDM4115T	13,615	WDW	30.28	700	94.5	230/460	58	1, 30
	1200	365TC	TEFC	CEWDM4312T	20,333	WDW	33.48	908	94.1	230/460	61.7	
	900	405TC	TEFC	CEWDM4458T	33,533	WDW	38.20	1216	92.4	230/460	64.3	
60	3600	364TSC	TEFC	CEWDM4310T	20,493	WDW	31.35	999	93.6	230/460	66.1	
	1800	364TC	TEFC	CEWDM4314T	19,426	WDW	33.48	961	95	230/460	70	
	1200	404TC	TEFC	CEWDM4403T	27,590	WDW	38.20	1322	94.5	230/460	69.3	
	900	405TC	TEFC	CEWDM4468T	35,764	WDW	38.20	1216	92.4	230/460	78.4	
75	3600	365TSC	TEFC	CEWDM4313T	21,953	WDW	31.35	1005	94.5	230/460	80.7	
	1800	365TC	TEFC	CEWDM4316T	20,980	WDW	33.48	965	95.4	230/460	86	
	1200	405TC	TEFC	CEWDM4404T	33,142	WDW	38.20	1322	94.5	230/460	87	
	900	444TC	TEFC	CEWDM4419T	44,327	WDW	44.96	1815	93.6	230/460	89.3	

(a) See notes on inside back flap.
Cast iron frame
Red catalog number indicates **NEW** product.

NEW!

NEW!

Close-coupled pump, three phase, totally enclosed, foot mounted, washdown features

25 thru 75 Hp

IP55

Features:

- Oversized, double sealed ball bearings
- Locked DE bearing
- Neoprene gaskets
- Lip and V-Ring seal on DE
- NEMA Premium® efficiency
- White epoxy, corrosion resistant finish
- 300 series stainless steel hardware and shaft extension
- Rugged cast iron construction

Applications:

- Water pumps commercial and industrial
- Food processing
- Wet environment

Hp	RPM	NEMA Frame	Enclosure	Catalog Number	List Price	Disc. Sym.	"C" Dim.	Aprx. Wt. (lb)	Full Load Efficiency	Voltage	Full Load Amps	Notes (a)
25	3600	284JM	TEFC	**JMEWDM4107T**	8,492	WDW	28.44	446	91.7	230/460	30	1
	1800	284JM	TEFC	**JMEWDM4103T**	8,197	WDW	28.44	437	93.6	230/460	30	1
30	3600	286JM	TEFC	**JMEWDM4108T**	10,043	WDW	28.44	459	91.7	230/460	34	1, 30
	1800	286JM	TEFC	**JMEWDM4104T**	9,318	WDW	28.44	460	93.6	230/460	36	1
40	3600	324JM	TEFC	**JMEWDM4109T**	13,592	WDW	30.53	587	92.4	230/460	47	1
	1800	324JM	TEFC	**JMEWDM4110T**	12,078	WDW	30.53	600	94.1	230/460	46	1, 30
50	3600	326JM	TEFC	**JMEWDM4114T**	14,160	WDW	30.53	635	93	230/460	55	1
	1800	326JM	TEFC	**JMEWDM4115T**	13,876	WDW	30.53	700	94.5	230/460	57	1
60	3600	364TCZ	TEFC	**JMEWDM4310T**	21,161	WDW	33.11	999	93.6	230/460	66.1	
	1800	364TCZ	TEFC	**JMEWDM4314T**	20,094	WDW	33.11	961	95	230/460	70	
75	3600	365TCZ	TEFC	**JMEWDM4313T**	22,622	WDW	33.11	1005	94.5	230/460	80.7	
	1800	365TCZ	TEFC	**JMEWDM4316T**	21,649	WDW	33.11	965	95.4	230/460	86	

(a) See notes on inside back flap.
Cast iron frame
Red catalog number indicates **NEW** product.

Washdown lead connection kits

Heat shrink connector kit
WD5603A01SP*

Wirenut Kit
WD5600A01SP

Features:

- Heat shrink sealed closed-end connector kit (WD5603A01SP)
- Heat shrink connector kit bulk quantity (WD5603A05SP)
- Wirenut kit (WD5600A01SP)
- Provides extra protections against moisture ingress

Applications:

- Food processing
- Wet environment
- Conveyors
- Packaging
- Pumps and wastewater

Catalog Number	Description	List Price	Disc. Sym.	Wire Range	Apprx. Wt. (lb)
WD5603A01SP	Includes 6 connectors	18	SVC	#18 - #10 AWG	1
WD5603A05SP	Includes 50 connectors	73	SVC	#18 - #10 AWG	3
WD5600A01SP	Includes 6 wirenuts	43	SVC	#22 - #8 AWG	1

*WD5603A01SP is provided as standard for Food Safe stainless encapsulated motors

Explosion proof motors

Baldor-Reliance® explosion proof motors are certified for use in hazardous locations or potentially hazardous environments where concentrations of combustible gases, vapors and or dust may be present. These motors meet UL and CSA standards for use in Division based hazardous locations per NFPA70 National Electric Code and C22.1, the Canadian Electric Code.

Key features:

- Uncompromised safety
- UL Certification markings
- Premium efficient electrical designs

1/4 - 250 Horsepower

Product line		General Purpose XP	Severe Duty XP	Drill Rig Motors
Division 1 Certifications				
Class & Group	Class I, Group C & D & Class II, Group F & G	S	–	–
	Class I, Group D & Class II, Group F & G	S	–	–
	Class I, Group C & D & Class II, Group E, F & G	–	S	–
	Class I, Group C & D	–	–	S
Electrical features				
Efficiency	Baldor-Reliance® motors meet or exceed all efficiency requirements for US, Canada and Mexico regulations	S	S	S
Service factor	1.15 service factor continuous (1 Hp and larger)	S	S	S
Ambient	40°C ambient	S	–	–
	40°C ambient, suitable for 55°C ambient at 1.0 service factor	–	S	S
Inverter	Motor nameplate includes variable torque and constant torque speed ranges (1 Hp and larger)	S	S	S
Mechanical features				
Frame	Steel band frame – cast iron endplates	S	–	S
	Cast iron frame – cast iron endplates	S	S	S
Fan cover	Steel fan cover	S	–	S
	Cast iron fan cover	S	S	S
UL drains	UL listed breather drain	–	S	S

S = Standard

NEW!

Explosion proof, general purpose, single phase

1/4 thru 5 Hp

Features:

- Robust steel frame designs
- IP54 ingress protection
- 1.15 service factor on 143T frame and larger
- Auto thermal overload (<1 Hp), normally closed thermostats (≥1 Hp)
- Threaded lead inlet
- Low noise vibration dampening bases

Applications:

- Customer specified Division 1 hazardous areas
- Pumps, fans and conveyors
- Fixed speed operation

Hp	RPM	NEMA Frame	Catalog Number	XP Cls/ Grp	Temp Code	List Price	Disc. Sym.	"C" Dim.	Aprx. Wt. (lb)	Full Load Efficiency	Voltage	Full Load Amps	Notes (a)
Foot mounted													
1/4	1800	48	XL040242A	②	T3C	911	XP1	12.84	27	55	115/208-230	2.5	2
		56	XL050242A	②	T3C	869	XP1	13.22	29	62	115/208-230	2	2
		56	XL050245A	⑤	T3C	1,082	XP1	13.22	29	62	115/208-230	2	2
1/3	3600	48	XL040322A	②	T3C	807	XP1	12.84	28	55	115/230	3	2
	1800	48	XL040342A	②	T3C	1,174	XP1	12.84	29	60	115/208-230	3	2
		56	XL050342A	②	T3C	1,118	XP1	13.22	29	60	115/208-230	3	2
	1200	56	XL050362A	②	T4	1,582	XP1	15.15	50	59	115/230	3.6	2
1/2	3600	56	XL050522A	②	T3C	1,060	XP1	14.22	50	60	115/230	4.7	2
	1800	48	XL040542A	②	T3C	1,291	XP1	13.84	36	64	115/208-230	3.7	2
		56	XL050542A	②	T3C	1,232	XP1	14.22	36	64	115/208-230	3.7	2
		56	XL050545A	⑤	T3C	1,444	XP1	14.22	36	64	115/208-230	3.7	2
	1200	56	XL050562A	②	T3C	1,823	XP1	15.15	50	59	115/230	4	2
3/4	3600	56	XL050722A	②	T4	1,195	XP1	15.15	50	66	115/230	4.6	2
	1800	56	XL050742A	②	T4	1,447	XP1	15.15	53	70	115/230	5.6	2
		56	XL050745A	⑤	T4	1,660	XP1	15.17	53	70	115/230	5.6	2
	1200	56	XL050762	②	T3C	2,108	XP1	17.40	63	62	115/208-230	5.9	
1	3600	56	XL05122A	②	T4	1,291	XP1	15.15	50	66	115/230	6	2
	1800	56	XL05142A	②	T2C	1,648	XP1	15.15	53	67	115/230	6.2	2
		143T	XL14142T	②	T3C	1,614	XP1	15.21	48	72	115/230	6.1	
	1200	184	XL18162	②	T3C	3,611	XP1	16.92	82	67	115/208-230	7.4	
1 1/2	3600	143T	XL141522T	②	T3C	1,871	XP1	16.09	42	70	115/208-230	8	
	1800	184	XL181542	②	T3C	3,353	XP1	16.92	93	70	115/230	8.2	
2	3600	145T	XL14222T	②	T3C	2,312	XP1	17.47	67	75.5	115/208-230	10.5	
	1800	182T	XL18242T	②	T3C	3,397	XP1	17.42	93	75	115/230	11	
3	3600	184T	XL18322T	②	T3C	3,530	XP1	17.42	91	76	115/230	14.5	
	1800	215	XL21342	②	T3C	5,363	XP1	19.90	161	77	115/230	16.5	
5	1800	215	XL21542	②	T3C	6,822	XP1	18.77	166	84	230	19.7	
C-Face, foot mounted													
1/3	1800	56C	CXL050342A	②	T3C	1,362	XP1	13.22	29	60	115/208-230	3	2
1/2	3600	56C	CXL050522A	②	T3C	1,195	XP1	14.22	30	60	115/230	4.7	2
	1800	56C	CXL050542A	②	T3C	1,363	XP1	14.22	36	64	115/208-230	3.7	2
3/4	1800	56C	CXL050742A	②	T4	1,522	XP1	15.15	48	70	115/230	5.6	2
1	3600	56C	CXL05122A	②	T4	1,357	XP1	15.15	50	66	115/230	6	2
	1800	56C	CXL05142A	②	T2C	1,727	XP1	15.17	48	67	115/230	6.5	2
1 1/2	3600	143TC	CXL141522T	②	T3C	2,126	XP1	16.10	42	70	115/208-230	8	
	1800	184C	CXL181542	②	T3C	3,450	XP1	18.43	93	70	115/230	9.2	
2	3600	143TC	CXL14222T	②	T3C	2,430	XP1	17.48	73	75.5	115/208-230	10.5	
	1800	182TC	CXL18242T	②	T3C	3,560	XP1	18.86	93	75	115/230	11	

(a) See notes on inside back flap. **Red** catalog number indicates **NEW** product.
② = Class I, Group D, Class II, Group F & G ⑤ = Class I, Group C & D, Class II, Group F & G

Caution: Explosion-proof motors have a tight fit between mating parts to ensure the integrity of the explosion-proof enclosure. This can lead to an accumulation of moisture inside the motors due to condensation. If internal condensation buildup is a concern for your XP motor application, select a motor that includes UL listed breather drain, such as the single phase Drill Rig Duty motor. These explosion-proof motors are not suitable for use with adjustable speed drives.
Please see the table at the end of this section for a list of inverter capable motors.

NEW!

NEW!

Explosion proof, general purpose, single phase

Hp	RPM	NEMA Frame	Catalog Number	XP Cls/ Grp	Temp Code	List Price	Disc. Sym.	"C" Dim.	Aprx. Wt. (lb)	Full Load Efficiency	Voltage	Full Load Amps	Notes (a)
C-Face, foot mounted (continued)													
3	3600	184TC	**CXL18322T**	②	T3C	3,601	XP1	18.86	91	76	115/230	14.5	
	1800	215C	**CXL21342**	②	T2C	5,525	XP1	20.69	161	77	115/230	16.5	
5	1800	215C	**CXL21542**	②	T2C	7,033	XP1	19.56	111	84	230	19.7	
C-Face, footless													
1/4	1800	56C	**VXL050242A**	②	T3C	1,205	XP1	13.22	29	62	115/208-230	2	2
1/3	3600	56C	**VXL050322A**	②	T3C	917	XP1	13.22	30	59.9	115/230	3	2
	1800	56C	**VXL050342A**	②	T3C	1,232	XP1	13.22	29	60	115/208-230	3	2
	1200	56C	**VXL050362A**	②	T4	1,650	XP1	15.15	42	59	115/230	3.6	2
1/2	3600	56C	**VXL050522A**	②	T3C	1,187	XP1	14.22	42	60	115/230	4.7	2
	1800	56C	**VXL050542A**	②	T3C	1,360	XP1	14.22	36	64	115/208-230	3.7	2
	1200	56C	**VXL050562A**	②	T3C	1,892	XP1	15.15	50	59	115/230	4	2
3/4	3600	56C	**VXL050722A**	②	T4	1,270	XP1	15.15	40	66	115/230	4.6	2
	1800	56C	**VXL050742A**	②	T4	1,515	XP1	15.15	48	70	115/230	5.6	2
1	3600	56C	**VXL05122A**	②	T4	1,360	XP1	15.17	50	66	115/230	6	2
	1800	56C	**VXL05142A**	②	T2C	1,721	XP1	15.17	48	67	115/230	6.2	2
1 1/2	3600	56C	**VXL051522**	②	T3C	1,958	XP1	16.03	42	70	115/208-230	8	
	1800	56C	**VXL051542A**	②	T2C	2,271	XP1	17.40	73	75	115/230	8	2
2	1800	184C	**VXL18242**	②	T3C	3,613	XP1	18.43	93	75	115/230	11	

(a) See notes on inside back flap.
② = Class I, Group D, Class II, Group F & G
⑤ = Class I, Group C & D, Class II, Group F & G
Red catalog number indicates **NEW** product.
Caution: Explosion-proof motors have a tight fit between mating parts to ensure the integrity of the explosion-proof enclosure. This can lead to an accumulation of moisture inside the motors due to condensation. If internal condensation buildup is a concern for your XP motor application, select a motor that includes UL listed breather drain, such as the single phase Drill Rig Duty motor. These explosion-proof motors are not suitable for use with adjustable speed drives.
Please see the table at the end of this section for a list of inverter capable motors.

NEW!

Explosion proof, general purpose, foot mounted, three phase, 230/460 and 575 volts

1/4 thru 60 Hp

Features:

- Robust steel and cast iron frame designs
- IP54 ingress protection
- 1.15 service factor on 1 Hp and larger
- Inverter Duty on 1 Hp and larger
- Auto thermal overload (<1 Hp), normally closed thermostats (≥1 Hp)
- Threaded lead inlet
- Low noise vibration dampening bases

Applications:

- Customer specified Division 1 hazardous areas
- Pumps, fans and conveyors
- Fixed and variable speed operation

Hp	RPM	NEMA Frame	Catalog Number	XP Cls/ Grp	Temp Code	List Price	Disc. Sym.	"C" Dim.	Aprx. Wt. (lb)	Full Load Efficiency	Voltage	Full Load Amps	Notes (a)
230/460V													
1/4	1800	48	**XM040242A**	②	T3C	947	XPM	12.85	25	63	208-230/460	0.7	2, 38
1/3	1800	56	**XM050342A**	②	T3C	1,138	XPM	13.22	27	67	208-230/460	0.8	2, 38
	1200	56	**XM050362A**	②	T4	1,633	XPM	14.30	34	70	208-230/460	0.8	2, 38
1/2	3600	56	**XM050522A**	②	T3C	1,304	XPM	13.22	27	68	208-230/460	1.1	2, 38
	1800	48	**XM040542A**	②	T3C	1,184	XPM	12.85	30	74	208-230/460	1	2, 38
		56	**XM050542A**	②	T3C	1,184	XPM	13.22	29	74	208-230/460	1	2, 38
	1200	56	**XM050562A**	②	T4	1,724	XPM	14.30	39	70	208-230/460	1.2	2, 38
3/4	3600	56	**XM050722A**	②	T3C	1,359	XPM	13.22	29	75	208-230/460	1.3	2, 38
	1800	56	**XM050742A**	②	T3C	1,363	XPM	14.22	33	73	208-230/460	1.5	2, 38
	1200	56	**XM050762A**	②	T4	1,831	XPM	15.17	43	77	208-230/460	1.4	2, 38
		143T	**XM140762TA**	②	T4	1,831	XPM	15.23	47	77	208-230/460	1.4	2, 38
1	3600	56	**XM05122**	②	T3C	2,202	XPM	14.22	41	77	230/460	1.4	19
	1800	56	**XM05142**	②	T3C	2,370	XPM	14.30	50	85.5	230/460	1.5	19
		143T	**XM14142T**	②	T3C	2,370	XPM	14.34	50	85.5	230/460	1.5	19
		182	**XM18142**	②	T3C	2,501	XPM	15.23	51	85.5	230/460	1.5	19
	1200	56	**XM05162**	②	T3C	2,971	XPM	15.17	49	82.5	230/460	1.8	19
		145T	**XM14162T**	②	T3C	2,971	XPM	15.21	46	82.5	230/460	1.8	19
1 1/2	3600	143T	**XM141522T**	②	T3C	2,328	XPM	14.34	47	84	230/460	1.9	19
	1800	56	**XM051542**	②	T3C	2,406	XPM	15.17	46	86.5	230/460	2.2	19
		145T	**XM141542T**	②	T3C	2,406	XPM	15.21	46	86.5	230/460	2.2	19
	1200	182T	**XM181562T**	②	T3C	3,568	XPM	18.93	102	87.5	230/460	2.4	19
2	3600	143T	**XM14222T**	②	T3C	2,720	XPM	15.21	46	85.5	230/460	2.5	19
	1800	56	**XM05242**	②	T3C	2,468	XPM	16.04	53	86.5	230/460	2.7	19
		145T	**XM14242T**	②	T3C	2,468	XPM	16.09	59	86.5	230/460	2.7	19
	1200	184T	**XM18262T**	②	T3C	3,870	XPM	19.74	100	88.5	230/460	3.5	19
3	3600	182T	**XM18322T**	②	T3C	3,285	XPM	17.42	80	86.5	230/460	3.7	19
	1800	182T	**XM18342T**	②	T3C	2,630	XPM	18.93	102	89.5	230/460	4.2	19
	1200	213T	**XM21362T**	②	T3C	4,374	XPM	19.32	139	89.5	230/460	4.6	19
5	3600	184T	**XM18522T**	②	T3C	3,852	XPM	18.93	91	89.5	230/460	5.6	19
	1800	184T	**XM18542T**	②	T3C	3,122	XPM	19.74	118	89.5	230/460	6.8	19
		184T	**XM18542T-CI**	②	T3C	3,481	XPM	17.50	151	90.2	230/460	6.5	19
	1200	215T	**XM21562T**	②	T3C	3,481	XPM	20.82	184	89.5	230/460	7.2	19
7 1/2	3600	213T	**XM21722T**	②	T3C	4,854	XPM	18.19	125	89.5	230/460	8.7	19
	1800	213T	**XM21742T**	②	T3C	4,443	XPM	19.32	161	91.7	230/460	9.4	19
	1200	254T	**XM25762T**	②	T3C	3,959	XPM	25.50	374	91	230/460	11	19
10	3600	215T	**XM21122T**	②	T3C	5,592	XPM	20.06	122	90.2	230/460	11.6	19
	1800	215T	**XM21142T**	②	T3C	4,662	XPM	20.82	189	91.7	230/460	12	19
	1200	256T	**XM25162T**	②	T3C	5,447	XPM	25.50	400	91	230/460	15	19

(a) See notes on inside back flap. Cast iron frame **Red** catalog number indicates **NEW** product.
② = Class I, Group D, Class II, Group F & G For inverter capabilities see table at end of this section.

Caution: Explosion-proof motors have a tight fit between mating parts to ensure the integrity of the explosion-proof enclosure. This can lead to an accumulation of moisture inside the motors due to condensation. If internal condensation buildup is a concern for your XP motor application, select a motor that includes UL listed breather drain, such as Drill Rig Duty or Severe Duty explosion proof motors.

NEW!

NEW!

Explosion proof, general purpose, foot mounted, three phase, 230/460 and 575 volts

Hp	RPM	NEMA Frame	Catalog Number	XP Cls/ Grp	Temp Code	List Price	Disc. Sym.	"C" Dim.	Aprx. Wt. (lb)	Full Load Efficiency	Voltage	Full Load Amps	Notes (a)
230/460V (continued)													
15	3600	254T	**XM251522T**	②	T3C	5,271	XPM	25.50	349	91	230/460	17.2	19
	1800	254T	**XM251542T**	②	T3C	6,177	XPM	25.50	373	92.4	230/460	18.1	19
	1200	284T	**XM281562T**	②	T3C	10,837	XPM	28.61	478	91.7	230/460	21	19
20	3600	256T	**XM25222T**	②	T3C	6,760	XPM	25.50	390	91	230/460	22	19
	1800	256T	**XM25242T**	②	T3C	8,003	XPM	25.50	335	93	230/460	24	19
	1200	286T	**XM28262T**	②	T3C	11,127	XPM	28.61	539	91.7	230/460	26	19
25	3600	284TS	**XM282522T**	②	T3C	8,996	XPM	27.24	507	91.7	230/460	28	19
	1800	284T	**XM282542T**	②	T3C	9,709	XPM	28.61	537	93.6	230/460	31	19
	1200	324T	**XM322562T**	②	T3C	13,913	XPM	32.00	737	93	230/460	32	19
30	3600	286TS	**XM28322T**	②	T3C	10,573	XPM	27.24	528	91.7	230/460	34	19
	1800	286T	**XM28342T**	②	T3C	11,836	XPM	28.61	554	93.6	230/460	38	19
	1200	326T	**XM32362T**	②	T3C	15,349	XPM	32.00	766	93	230/460	39	19
40	3600	324TS	**XM32422T**	②	T3C	14,104	XPM	30.50	630	92.4	230/460	45	19
	1800	324T	**XM32442T**	②	T3C	15,862	XPM	32.00	713	94.1	230/460	48	19
	1200	364T	**XM36462T**	②	T3C	17,789	XPM	33.48	915	94.1	230/460	49.8	
50	3600	326TS	**XM32522T**	②	T3C	18,059	XPM	30.50	745	93	230/460	56	19
	1800	326T	**XM32542T**	②	T3C	18,413	XPM	32.00	764	94.5	230/460	58	19
	1200	365T	**XM36562T**	②	T3C	20,078	XPM	33.48	918	94.1	230/460	61.7	
60	1800	364T	**XM36642T**	②	T3C	20,597	XPM	33.48	972	95	230/460	70	
575V													
1/2	1800	56	**XM050542-5**	②	T3C	1,184	XPM	14.28	34	78.5	575	0.7	
3/4	1800	56	**XM050742-5**	②	T3C	1,363	XPM	14.28	37	76	575	0.9	
1	3600	56	**XM05122-5**	②	T3C	2,202	XPM	14.30	33	77	575	1.1	
	1800	56	**XM05142-5**	②	T3C	2,370	XPM	14.30	50	85.5	575	1.2	
		143T	**XM14142T-5**	②	T3C	2,370	XPM	14.34	50	85.5	575	1.2	
1 1/2	3600	143T	**XM141522T-5**	②	T3C	2,328	XPM	14.34	45	84	575	1.6	
	1800	145T	**XM141542T-5**	②	T3C	2,406	XPM	15.21	46	86.5	575	1.8	
2	3600	145T	**XM14222T-5**	②	T3C	2,720	XPM	15.21	55	85.5	575	2	
	1800	145T	**XM14242T-5**	②	T3C	2,468	XPM	15.21	48	86.5	575	2.3	
3	1800	182T	**XM18342T-5**	②	T3C	2,630	XPM	18.93	102	89.5	575	3.3	
5	3600	184T	**XM18522T-5**	②	T3C	3,852	XPM	17.42	85	88.5	575	4.7	
	1800	184T	**XM18542T-5**	②	T3C	3,122	XPM	19.74	97	89.5	575	5.3	
7 1/2	1800	213T	**XM21742T-5**	②	T3C	3,959	XPM	19.32	161	91.7	575	7.6	

(a) See notes on inside back flap.
② = Class I, Group D, Class II, Group F & G
For inverter capabilities see table at end of this section.
Cast iron frame
Red catalog number indicates **NEW** product.
Caution: Explosion-proof motors have a tight fit between mating parts to ensure the integrity of the explosion-proof enclosure. This can lead to an accumulation of moisture inside the motors due to condensation. If internal condensation buildup is a concern for your XP motor application, select a motor that includes UL listed breather drain, such as Drill Rig Duty or Severe Duty explosion proof motors.

NEW!

Explosion proof, general purpose, C-Face, three phase, 230/460 and 575 volts

1/4 thru 40 Hp

Features:

- Robust steel and cast iron frame designs
- IP54 ingress protection
- 1.15 service factor on 1 Hp and larger
- Inverter Duty on 1 Hp and larger
- Auto thermal overload (<1 Hp), normally closed thermostats (≥1 Hp)
- Threaded lead inlet

Applications:

- Customer specified Division 1 hazardous areas
- Pumps, blowers, valves, gearboxes
- Fixed and variable speed operation

Hp	RPM	NEMA Frame	Catalog Number	XP Cls/ Grp	Temp Code	List Price	Disc. Sym.	"C" Dim.	Aprx. Wt. (lb)	Full Load Efficiency	Voltage	Full Load Amps	Notes (a)
230/460V, C-Face, foot mounted													
1/3	1800	56C	**CXM050342**	②	T3C	1,230	XPM	14.30	37	80	230/460	0.55	19
1/2	3600	56C	**CXM050522A**	②	T3C	1,396	XPM	13.22	27	68	208-230/460	1.1	2, 38
	1800	56C	**CXM050542A**	②	T3C	1,276	XPM	13.22	30	74	208-230/460	1	2, 38
		56C	**CXM050542**	②	T3C	1,276	XPM	14.30	33	82.5	230/460	0.8	19
3/4	3600	56C	**CXM050722A**	②	T3C	1,451	XPM	13.22	29	75	208-230/460	1.3	2, 38
	1800	56C	**CXM050742A**	②	T3C	1,456	XPM	14.22	35	73	208-230/460	1.5	2, 38
		56C	**CXM050742**	②	T3C	1,456	XPM	14.30	45	84	230/460	1.1	19
1	3600	56C	**CXM05122**	②	T3C	2,294	XPM	14.22	41	82.5	230/460	1.4	19
	1800	56C	**CXM05142**	②	T3C	2,462	XPM	14.30	50	85.5	230/460	1.5	19
		143TC	**CXM14142T**	②	T3C	2,475	XPM	14.33	50	85.5	230/460	1.5	19
1 1/2	3600	143TC	**CXM141522T**	②	T3C	2,434	XPM	14.33	47	84	230/460	1.9	19
	1800	56C	**CXM051542**	②	T3C	2,498	XPM	15.17	50	86.5	230/460	2.2	19
		145TC	**CXM141542T**	②	T3C	2,511	XPM	15.21	50	86.5	230/460	2.2	19
2	3600	143TC	**CXM14222T**	②	T3C	2,826	XPM	15.21	55	85.5	230/460	2.5	19
	1800	56C	**CXM05242**	②	T3C	2,561	XPM	15.17	59	86.5	230/460	2.9	19
		145TC	**CXM14242T**	②	T3C	2,574	XPM	16.09	58	86.5	230/460	3	19
3	3600	182TC	**CXM18322T**	②	T3C	3,390	XPM	17.49	80	86.5	230/460	3.7	19
	1800	182TC	**CXM18342T**	②	T3C	3,148	XPM	18.86	102	89.5	230/460	4.2	19
5	3600	184TC	**CXM18522T**	②	T3C	4,370	XPM	18.86	93	88.5	230/460	5.9	19
	1800	184TC	**CXM18542T**	②	T3C	3,641	XPM	20.36	118	89.5	230/460	6.8	19
7 1/2	3600	213TC	**CXM21722T**	②	T3C	5,004	XPM	20.36	149	89.5	230/460	9	19
	1800	213TC	**CXM21742T**	②	T3C	4,520	XPM	21.81	163	91.7	230/460	9.5	19
10	3600	215TC	**CXM21122T**	②	T3C	5,223	XPM	21.81	165	90.2	230/460	11.2	19
	1800	215TC	**CXM21142T**	②	T3C	6,009	XPM	21.56	189	91.7	230/460	12	19
15	3600	254TC	**CXM251522T**	②	T3C	6,322	XPM	26.00	341	91	230/460	17.5	19
	1800	254TC	**CXM251542T**	②	T3C	7,227	XPM	26.00	373	92.4	230/460	18.1	19
20	3600	256TC	**CXM25222T**	②	T3C	7,810	XPM	26.00	390	91	230/460	23	19
	1800	256TC	**CXM25242T**	②	T3C	9,053	XPM	26.00	335	93	230/460	24	19
25	1800	284TC	**CXM282542T**	②	T3C	11,064	XPM	28.61	506	93.6	230/460	31	19
30	1800	286TC	**CXM28342T**	②	T3C	13,191	XPM	28.61	535	93.6	230/460	36	19
40	1800	324TC	**CXM32442T**	②	T3C	17,465	XPM	32.00	720	94.1	230/460	48	19
230/460V, C-Face, footless													
1/4	1800	56C	**VXM050242A**	②	T3C	1,039	XPM	13.22	25	63	208-230/460	0.65	2, 38
1/3	1800	56C	**VXM050342A**	②	T3C	1,230	XPM	13.22	28	67	208-230/460	0.8	2, 38
1/2	3600	56C	**VXM050522A**	②	T3C	1,396	XPM	13.22	27	68	208-230/460	1.1	2, 38
	1800	56C	**VXM050542A**	②	T3C	1,276	XPM	13.22	30	74	208-230/460	1	2, 38
	1200	56C	**VXM050562A**	②	T4	1,816	XPM	14.30	40	70	208-230/460	1.2	2, 38

(a) See notes on inside back flap. Cast iron frame **Red** catalog number indicates **NEW** product.
② = Class I, Group D, Class II, Group F & G For inverter capabilities see table at end of this section.
Caution: Explosion-proof motors have a tight fit between mating parts to ensure the integrity of the explosion-proof enclosure. This can lead to an accumulation of moisture inside the motors due to condensation. If internal condensation buildup is a concern for your XP motor application, select a motor that includes UL listed breather drain, such as Drill Rig Duty or Severe Duty explosion proof motors.

NEW!

NEW!

Explosion proof, general purpose, C-Face, three phase, 230/460 and 575 volts

Hp	RPM	NEMA Frame	Catalog Number	XP Cls/ Grp	Temp Code	List Price	Disc. Sym.	"C" Dim.	Aprx. Wt. (lb)	Full Load Efficiency	Voltage	Full Load Amps	Notes (a)
230/460V, C-Face, footless (continued)													
3/4	3600	56C	**VXM050722A**	②	T3C	1,451	XPM	13.22	29	75	208-230/460	1.3	2, 38
	1800	56C	**VXM050742A**	②	T3C	1,456	XPM	14.22	35	73	208-230/460	1.5	2, 38
	1200	56C	**VXM050762A**	②	T4	1,923	XPM	15.15	47	77	208-230/460	1.4	2, 38
1	3600	56C	**VXM05122**	②	T3C	2,294	XPM	14.22	41	82.5	230/460	1.4	19
	1800	56C	**VXM05142**	②	T3C	2,462	XPM	14.30	50	85.5	230/460	1.5	19
		143TC	**VXM14142T**	②	T3C	2,475	XPM	14.33	50	85.5	230/460	1.5	19
	1200	56C	**VXM05162**	②	T3C	3,063	XPM	15.12	49	82.5	230/460	1.8	19
1 1/2	3600	143TC	**VXM141522T**	②	T3C	2,434	XPM	14.33	47	84	230/460	1.9	19
	1800	56C	**VXM051542**	②	T3C	2,498	XPM	15.12	50	86.5	230/460	2.2	19
		145TC	**VXM141542T**	②	T3C	2,511	XPM	15.21	50	86.5	230/460	2.2	19
	1200	145TC	**VXM141562T**	②	T2C	4,087	XPM	18.42	102	87.5	230/460	2.4	19
2	3600	143TC	**VXM14222T**	②	T3C	2,826	XPM	15.21	55	85.5	230/460	2.5	19
	1800	56C	**VXM05242**	②	T3C	2,561	XPM	17.42	64	86.5	230/460	2.7	19
		145TC	**VXM14242T**	②	T3C	2,574	XPM	17.47	64	86.5	230/460	2.7	19
3	3600	182TC	**VXM18322T**	②	T3C	3,804	XPM	17.49	80	86.5	230/460	3.7	19
	1800	182TC	**VXM18342T**	②	T3C	3,148	XPM	18.86	102	89.5	230/460	4.2	19
5	3600	184TC	**VXM18522T**	②	T3C	4,370	XPM	18.86	91	88.5	230/460	5.6	19
	1800	184TC	**VXM18542T**	②	T3C	3,641	XPM	20.36	118	89.5	230/460	6.8	19
7 1/2	3600	213TC	**VXM21722T**	②	T3C	5,004	XPM	19.19	149	89.5	230/460	9	19
	1800	213TC	**VXM21742T**	②	T3C	4,520	XPM	20.32	163	91.7	230/460	9.5	19
10	1800	215TC	**VXM21142T**	②	T3C	6,009	XPM	21.82	189	91.7	230/460	12	19
575V, C-Face, footless													
1/2	1800	56C	**VXM050542-5**	②	T3C	1,276	XPM	14.30	37	78.5	575	0.7	
3/4	1800	56C	**VXM050742-5**	②	T3C	1,456	XPM	14.30	37	76	575	1.2	
1	1800	56C	**VXM05142-5**	②	T3C	2,462	XPM	14.30	50	85.5	575	1.2	
		143TC	**VXM14142T-5**	②	T3C	2,475	XPM	14.33	50	85.5	575	1.2	
1 1/2	1800	145TC	**VXM141542T-5**	②	T3C	2,511	XPM	15.21	50	86.5	575	1.8	
2	1800	145TC	**VXM14242T-5**	②	T3C	2,574	XPM	16.09	64	88.5	575	2.16	
3	1800	182TC	**VXM18342T-5**	②	T3C	3,148	XPM	18.86	102	89.5	575	3.3	
5	1800	184TC	**VXM18542T-5**	②	T3C	3,641	XPM	20.36	118	89.5	575	5.3	
7 1/2	1800	213TC	**VXM21742T-5**	②	T3C	4,520	XPM	20.32	163	91.7	575	7.6	

(a) See notes on inside back flap.
② = Class I, Group D, Class II, Group F & G
For inverter capabilities see table at end of this section.
Red catalog number indicates **NEW** product.
Caution: Explosion-proof motors have a tight fit between mating parts to ensure the integrity of the explosion-proof enclosure. This can lead to an accumulation of moisture inside the motors due to condensation. If internal condensation buildup is a concern for your XP motor application, select a motor that includes UL listed breather drain, such as Drill Rig Duty or Severe Duty explosion proof motors.

NEW!

Explosion proof, general purpose, brake, three phase

1/2 thru 5 Hp

Features:

- Robust steel and cast iron frame designs
- 1.15 service factor
- Inverter Duty
- C-Face, foot mounted as standard
- Spring set brake, power off operation manual brake release
- Brake resets automatically
- External, separately wired brake
- Normally closed thermostats
- Threaded lead inlet

Applications:

- Customer specified Division 1 hazardous areas
- Stopping and holding brake motor
- Fixed and variable speed operation

Hp	RPM	NEMA Frame	Catalog Number	XP Cls/ Grp	Temp Code	List Price	Disc. Sym.	"C" Dim.	Aprx. Wt. (lb)	Full Load Efficiency	Voltage	Full Load Amps	Brake Rating lb.-ft.	Notes (a)
1/2	1800	56C	**CBXMN050542**	②	T3C	5,444	XPB	19.44	75	80	230/460	0.8	3	19, 60
3/4	1800	56C	**CBXMN050742**	②	T3C	6,063	XPB	19.44	86	82.5	230/460	1.1	6	19, 60
1	1800	143TC	**CBXMN14142T**	②	T3C	8,037	XPB	20.37	99	87.5	230/460	1.5	6	19, 60
2	1800	182TC	**CBXMN18242T**	②	T3C	9,729	XPB	23.24	141	87.5	230/460	2.7	10	19, 60
3	1800	182TC	**CBXM18342T**	②	T3C	10,237	XPB	27.20	184	89.5	230/460	4.1	15	19
5	1800	184TC	**CBXM18542T**	②	T3C	12,332	XPB	30.83	241	90.2	230/460	6.5	25	19

(a) See notes on inside back flap. Cast iron frame **Red** catalog number indicates **NEW** product.
② = Class I, Group D, Class II, Group F & G Ingress protection of IP55 is available as custom For inverter capabilities see table at end of this section.
Caution: Explosion-proof motors have a tight fit between mating parts to ensure the integrity of the explosion-proof enclosure.
This can lead to an accumulation of moisture inside the motors due to condensation.
If internal condensation buildup is a concern for your XP motor application, please contact our local sales office for a custom brake motor solution.
Please note that only the motor can be connected to adustable speed drive. Brake is to be supplied with sinusoidal power only.

Explosion proof, general purpose, close coupled pump, three phase

3 thru 10 Hp

Features:

- NEMA JM pump mounting
- IP54 ingress protection
- 1.15 service factor
- Inverter Duty
- Steel band frame, cast iron endplates
- Oversized ball bearings, locked DE
- Normally closed thermostats
- Threaded lead inlet

Applications:

- Customer specified Division 1 hazardous areas
- Wastewater
- Industrial pumps
- Fixed and variable speed operation

Hp	RPM	NEMA Frame	Catalog Number	XP Cls/ Grp	Temp Code	List Price	Disc. Sym.	"C" Dim.	Aprx. Wt. (lb)	Full Load Efficiency	Voltage	Full Load Amps	Notes (a)
3	3600	143JM	**JMXM14321T**	①	T3C	3,420	XPP	18.67	59	86.5	230/460	3.6	2, 38
		182JM	**JMXM18322T**	②	T3C	4,023	XPP	18.98	80	86.5	230/460	3.7	19
5	3600	184JM	**JMXM18522T**	②	T3C	4,589	XPP	20.36	91	89.5	230/460	5.6	19
7 1/2	3600	184JM	**JMXM18721T**	①	T2C	4,757	XPP	21.86	115	89.5	230/460	8.4	2, 38
		213JM	**JMXM21722T**	②	T3C	5,406	XPP	21.45	149	89.5	230/460	9	19
10	3600	215JM	**JMXM21122T**	②	T2D	5,625	XPP	24.20	205	90.2	230/460	12	19

(a) See notes on inside back flap. **Red** catalog number indicates **NEW** product.
① = Class I, Group D ② = Class I, Group D, Class II, Group F & G For inverter capabilities see table at end of this section.
Caution: Explosion-proof motors have a tight fit between mating parts to ensure the integrity of the explosion-proof enclosure. This can lead to an accumulation of moisture inside the motors due to condensation. If internal condensation buildup is a concern for your XP motor application, select a motor that includes UL listed breather drain, such as the Drill Rig Duty close coupled pump motor.

NEW!

NEW!

Explosion proof, general purpose, jet pump, single and three phase

1/2 thru 2 Hp

Features:

- NEMA 56J jet pump mounting
- IP54 ingress protection
- 1.15 service factor (1 Hp and larger)
- Three phase Inverter Duty
- Steel band frame, cast iron endplates
- Oversized ball bearings, locked DE
- Auto thermal overload thru 1 Hp single phase
- Threaded lead inlet

Applications:

- Customer specified Division 1 hazardous areas
- Wastewater
- Industrial pumps
- Fixed and variable speed operation

Hp	RPM	NEMA Frame	Catalog Number	XP Cls/ Grp	Temp Code	List Price	Disc. Sym.	"C" Dim.	Aprx. Wt. (lb)	Full Load Efficiency	Voltage	Full Load Amps	Notes (a)
Single Phase													
1/2	3600	56J	**JXL050522A**	②	T3C	3,420	XPP	14.78	37	55	115/230	3.9	2, 38
3/4	3600	56J	**JXL050722A**	②	T4	4,022	XPP	15.66	40	66	115/230	4.6	2, 38
1	3600	56J	**JXL05122A**	②	T4	4,589	XPP	15.66	50	66	115/230	6	2, 38
1 1/2	3600	56J	**JXL051522**	②	T3C	4,757	XPP	16.56	54	70	115/208-230	8	38
2	3600	56J	**JXL05222**	②	T3C	5,406	XPP	17.94	67	75.5	115/208-230	10.5	38
Three Phase													
1	3600	56J	**JXM05122**	②	T3C	2,529	XPP	14.79	41	82.5	230/460	1.4	19
1 1/2	3600	56J	**JXM051522**	②	T3C	2,656	XPP	14.79	47	84	230/460	1.9	19
2	3600	56J	**JXM05222**	②	T3C	3,048	XPP	15.67	55	85.5	230/460	2.5	19

(a) See notes on inside back flap.
② = Class I, Group D, Class II, Group F & G
Red catalog number indicates **NEW** product.
For 3 phase inverter capabilities see table at end of this section.
Caution: Explosion-proof motors have a tight fit between mating parts to ensure the integrity of the explosion-proof enclosure.
This can lead to an accumulation of moisture inside the motors due to condensation.
If internal condensation buildup is a concern for your XP motor application, please contact our local sales office for a custom motor solution.

NEW!

Explosion proof, general purpose, 50 Hz, single and three phase

1/3 thru 1 Hp

Features:

- Steel band frame, cast iron endplates
- IP54 ingress protection
- 1.15 service factor on three phase
- Auto thermal overload (<1 Hp) single phase
- Threaded lead inlet

Applications:

- Customer specified Division 1 hazardous areas
- Pumps, blowers, valves, gearboxes
- Fixed speed operation

Hp	RPM 50 Hz	NEMA Frame	Catalog Number	XP Cls/ Grp	Temp Code	List Price	Disc. Sym.	"C" Dim.	Aprx. Wt. (lb)	Full Load Efficiency	Voltage	Full Load Amps	Notes (a)
Single Phase													
1/3	1500	56C	**CXL050342A-50**	②	T3C	1,568	XP1	14.22	35	59.5	110/220	2.6	2, 38
1/2	1500	56C	**CXL050542A-50**	②	T3C	1,569	XP1	15.22	43	62	110/220	3.6	2, 38
3/4	1500	56C	**CXL050742A-50**	②	T4	1,750	XP1	15.17	53	70	110/220	4.8	2, 38
1	1500	56C	**CXL05142-50**	②	T3C	1,988	XP1	17.41	73	71	110/220	6.2	38
Three Phase													
1/2	1500	56C	**CXM050542-57**	②	T3C	1,469	XPM	14.22	36	73	230/400	1	38
3/4	1500	56C	**CXM050742-57**	②	T3C	1,675	XPM	15.22	42	75.5	230/400	1.7	38
1	1500	56C	**CXM05142-57**	②	T3C	2,832	XPM	15.22	45	74	230/400	2	38

(a) See notes on inside back flap.
② = Class I, Group D, Class II, Group F & G
Red catalog number indicates **NEW** product.
Caution: Explosion-proof motors have a tight fit between mating parts to ensure the integrity of the explosion-proof enclosure.
This can lead to an accumulation of moisture inside the motors due to condensation.
If internal condensation buildup is a concern for your XP motor application, please contact our local sales office for a custom motor solution.
These explosion-proof motors are not suitable for use with adjustable speed drives.
Please see the table at the end of this section for a list of inverter capable motors.

NEW!

Explosion proof, severe duty, three phase

1 thru 250 Hp

Features:

- All cast iron construction
- IP55 thru 320 frame, IP66 360 frame and larger.
- Inverter Duty
- 1.15 SF, Class F insulation, 40°C ambient
- Suitable for 55°C ambient at 1.0 SF
- Group E, brass labyrinth shaft slingers
- Normally closed thermostats
- Threaded lead inlet
- UL breather drains

Applications:

- Customer specified Division 1 hazardous areas
- Chemical, oil & gas
- Pulp & paper
- Wastewater
- Fixed and variable speed operation

Hp	RPM	NEMA Frame	Catalog Number	XP Cls/ Grp	Temp Code	List Price	Disc. Sym.	"C" Dim.	Aprx. Wt. (lb)	Full Load Efficiency	Voltage	Full Load Amps	Notes (a)
Foot mounted													
1	1800	143T	**CPX14146T**	⑥	T3C	2,607	XSM	16.66	80	85.5	230/460	1.5	10, 19
1 1/2	1800	145T	**CPX141546T**	⑥	T3C	2,648	XSM	16.66	62	86.5	230/460	2.3	19
2	1800	145T	**CPX14246T**	⑥	T3C	2,715	XSM	16.66	120	86.5	230/460	2.9	19
	3600	182T	**CPX18326T**	⑥	T3C	3,614	XSM	17.59	127	89.5	230/460	4.1	10, 19
3	1800	182T	**CPX18346T**	⑥	T3C	2,893	XSM	17.59	127	89.5	230/460	4.1	19
	1200	213T	**CPX21366T**	⑥	T3C	4,859	XSM	20.02	221	89.5	230/460	4.5	10, 19
	3600	184T	**CPX18526T**	⑥	T3C	4,237	XSM	17.59	150	88.5	230/460	5.5	19, 35
5	1800	184T	**CPX18546T**	⑥	T3C	3,435	XSM	17.59	125	89.5	230/460	6.6	19
	1200	215T	**CPX21566T**	⑥	T3C	5,393	XSM	20.02	245	89.8	230/460	7.1	10, 19
	3600	213T	**CPX21726T**	⑥	T3C	4,887	XSM	20.02	171	91.7	230/460	8.6	10, 19
7 1/2	1800	213T	**CPX21746T**	⑥	T3C	4,355	XSM	20.02	228	91.7	230/460	10	19, 35
	1200	254T	**CPX25766T**	⑥	T3C	6,152	XSM	25.75	374	91	230/460	11	10, 19, 35, 47
	3600	215T	**CPX21126T**	⑥	T3C	5,129	XSM	20.02	174	90.2	230/460	11	19
10	1800	215T	**CPX21146T**	⑥	T3C	5,992	XSM	20.02	252	91.7	230/460	13	19, 35
	1200	256T	**CPX25166T**	⑥	T3C	7,397	XSM	25.75	400	91	230/460	15	10, 19, 35, 47
	3600	254T	**CPX251526T**	⑥	T3C	5,800	XSM	25.75	349	91	230/460	17	10, 19, 35, 47
15	1800	254T	**CPX251546T**	⑥	T3C	6,796	XSM	25.75	373	92.4	230/460	18	19, 35, 47
	1200	284T	**CPX281566T**	⑥	T3C	11,922	XSM	28.74	478	91.7	230/460	21	10, 19, 35, 47
	3600	256T	**CPX25226T**	⑥	T3C	7,930	XSM	25.75	390	91	230/460	22	19, 35, 47
20	1800	256T	**CPX25246T**	⑥	T3C	8,803	XSM	25.75	336	93	230/460	24	19, 35, 47
	1200	286T	**CPX28266T**	⑥	T3C	12,240	XSM	28.74	475	91.7	230/460	25	10, 19, 47
	3600	284TS	**CPX282526T**	⑥	T3C	10,226	XSM	27.24	445	91.7	230/460	29	10, 19, 47
25	1800	284T	**CPX282546T**	⑥	T3C	10,680	XSM	28.67	506	93.6	230/460	31	19, 35
	1200	324T	**CPX322566T**	⑥	T3C	15,304	XSM	32.24	619	93	230/460	32	10, 19, 35, 47
	3600	286TS	**CPX28326T**	⑥	T3C	12,455	XSM	27.24	495	91.7	230/460	33	10, 19, 47
30	1800	286T	**CPX28346T**	⑥	T3C	13,020	XSM	28.67	461	93.6	230/460	36	19, 35
	1200	326T	**CPX32366T**	⑥	T3C	16,885	XSM	32.24	647	93	230/460	39	10, 19, 35, 47
	3600	324TS	**CPX32426T**	⑥	T3C	15,515	XSM	30.50	593	92.4	230/460	45	10, 19, 35, 47
40	1800	324T	**CPX32446T**	⑥	T3C	17,450	XSM	32.24	605	94.1	230/460	48	10, 19, 35, 47
	1200	364T	**CPX36466T**	⑥	T3C	19,569	XSM	33.48	908	94.1	230/460	51	10, 35
	3600	326TS	**CPX32526T**	⑥	T3C	19,865	XSM	30.50	648	93	230/460	56	10, 19, 35, 47
50	1800	326T	**CPX32546T**	⑥	T3C	20,256	XSM	32.24	790	94.5	230/460	59	19, 35, 47
	1200	365T	**CPX36566T**	⑥	T3C	22,087	XSM	33.48	908	94.1	230/460	62	10

(a) See notes on inside back flap.
⑥ = Class I, Group C & D, Class II, Group E, F & G
Cast iron frame
For inverter capabilities see table at end of this section.
Red catalog number indicates **NEW** product.

NEW!

NEW!

Explosion proof, severe duty, three phase

Hp	RPM	NEMA Frame	Catalog Number	XP Cls/ Grp	Temp Code	List Price	Disc. Sym.	"C" Dim.	Aprx. Wt. (lb)	Full Load Efficiency	Voltage	Full Load Amps	Notes (a)
Foot mounted (continued)													
60	3600	364TS	**CPX36626T**	⑥	T3C	22,551	XSM	31.35	999	93.6	230/460	65	10
	1800	364T	**CPX36646T**	⑥	T3C	22,656	XSM	33.48	910	95	230/460	68	
	1200	404T	**CPX40666T**	⑥	T3C	27,934	XSM	38.22	1322	94.5	230/460	69	10
75	3600	365TS	**CPX36726T**	⑥	T3C	23,519	XSM	31.35	1005	93.6	230/460	82	10
	1800	365T	**CPX36746T**	⑥	T3C	24,921	XSM	33.48	965	95.4	230/460	86	
	1200	405T	**CPX40766T**	⑥	T3C	28,932	XSM	38.22	1375	94.5	230/460	84	10
100	1800	405T	**CPX40146T**	⑥	T3C	28,942	XSM	38.22	1326	95.4	230/460	112	
	1200	444T	**CPX44166T**	⑥	T3C	34,364	XSM	44.97	1800	95	230/460	116	10
125	1800	444T	**CPX441246T**	⑥	T3C	34,937	XSM	44.97	1669	95.4	460	144	10
150	1800	445T	**CPX441546T**	⑥	T3C	39,044	XSM	44.97	1826	95.8	460	169	10
200	1800	447T	**CPX44246T**	⑥	T3C	54,024	XSM	48.47	2676	96.2	460	222	10
250	1800	449T	**CPX442546T**	⑥	T3C	64,829	XSM	53.47	3027	96.2	460	271	10
C-Face, foot mounted													
3	3600	182TC	**CCPX18326T**	⑥	T3C	4,133	XSM	18.33	127	86.5	230/460	3.8	10, 19
	1800	182TC	**CCPX18346T**	⑥	T3C	3,412	XSM	18.33	111	89.5	230/460	4.1	19
	1200	213TC	**CCPX21366T**	⑥	T3C	5,421	XSM	20.77	221	89.5	230/460	4.5	10, 19, 47
5	3600	184TC	**CCPX18526T**	⑥	T3C	4,756	XSM	18.33	122	88.5	230/460	5.5	10, 19, 35
	1800	184TC	**CCPX18546T**	⑥	T3C	3,954	XSM	18.33	123	89.5	230/460	6.6	19
7 1/2	3600	213TC	**CCPX21726T**	⑥	T3C	5,449	XSM	20.77	169	90.7	230/460	9	10, 19, 47
	1800	213TC	**CCPX21746T**	⑥	T3C	4,917	XSM	20.77	228	91.7	230/460	10	19, 35, 47
	1200	254TC	**CCPX25766T**	⑥	T3C	7,203	XSM	25.94	322	91	230/460	11	10, 19, 35
10	3600	215TC	**CCPX21126T**	⑥	T3C	5,691	XSM	20.77	174	90.2	230/460	12	10, 19, 47
	1800	215TC	**CCPX21146T**	⑥	T3C	6,554	XSM	20.77	252	91.7	230/460	13	19, 35, 47
	1200	256TC	**CCPX25166T**	⑥	T3C	8,447	XSM	25.94	335	91	230/460	14	10, 19, 35
15	3600	254TC	**CCPX251526T**	⑥	T3C	6,850	XSM	25.94	270	91	230/460	17	10, 19, 35
	1800	254TC	**CCPX251546T**	⑥	T3C	7,846	XSM	25.94	302	92.4	230/460	18	19, 35
	1200	284TC	**CCPX281566T**	⑥	T3C	13,277	XSM	28.61	438	91.7	230/460	21	10, 19, 35, 47
20	3600	256TC	**CCPX25226T**	⑥	T3C	8,981	XSM	25.94	314	91	230/460	22	10, 19, 35
	1800	256TC	**CCPX25246T**	⑥	T3C	9,854	XSM	25.94	335	93	230/460	24	10, 19, 35
	1200	286TC	**CCPX28266T**	⑥	T3C	13,595	XSM	28.61	459	91.7	230/460	25	10, 19, 47
25	3600	284TSC	**CCPX282526T**	⑥	T3C	11,581	XSM	27.24	525	91.7	230/460	28	10, 19, 47
	1800	284TC	**CCPX282546T**	⑥	T3C	12,035	XSM	28.61	447	93.6	230/460	31	10, 19, 35, 47
	1200	324TC	**CCPX322566T**	⑥	T3C	16,906	XSM	32.00	741	93	230/460	32	10, 19, 35, 47
30	3600	286TSC	**CCPX28326T**	⑥	T3C	13,811	XSM	27.24	495	91.7	230/460	33	10, 19, 47
	1800	286TC	**CCPX28346T**	⑥	T3C	14,375	XSM	28.61	459	93.6	230/460	36	10, 19, 35, 47
	1200	326TC	**CCPX32366T**	⑥	T3C	18,487	XSM	32.00	766	93	230/460	39	10, 19, 35, 47
40	3600	324TSC	**CCPX32426T**	⑥	T3C	17,117	XSM	30.50	745	92.4	230/460	45	10, 19, 35, 47
	1800	324TC	**CCPX32446T**	⑥	T3C	19,052	XSM	32.00	720	94.1	230/460	48	10, 19, 35, 47
	1200	364TC	**CCPX36466T**	⑥	T3C	21,469	XSM	33.48	908	94.1	230/460	51	10, 35
50	3600	326TSC	**CCPX32526T**	⑥	T3C	21,468	XSM	30.50	766	93	230/460	56	10, 19, 35, 47
	1800	326TC	**CCPX32546T**	⑥	T3C	21,858	XSM	32.00	782	94.5	230/460	59	10, 19, 35, 47
	1200	365TC	**CCPX36566T**	⑥	T3C	23,987	XSM	33.48	982	94.1	230/460	62	10, 35
60	3600	364TSC	**CCPX36626T**	⑥	T3C	24,451	XSM	31.36	999	93.6	230/460	65	10
	1800	364TC	**CCPX36646T**	⑥	T3C	24,557	XSM	33.48	910	95	230/460	68	10
	1200	404TC	**CCPX40666T**	⑥	T3C	30,272	XSM	38.22	1322	94.5	230/460	69	10
75	3600	365TSC	**CCPX36726T**	⑥	T3C	25,420	XSM	31.36	1005	93.6	230/460	82	10
	1800	365TC	**CCPX36746T**	⑥	T3C	26,821	XSM	33.48	965	95.4	230/460	86	10
	1200	405TC	**CCPX40766T**	⑥	T3C	31,270	XSM	38.22	1322	94.5	230/460	87	10

(a) See notes on inside back flap.
⑥ = Class I, Group C & D, Class II, Group E, F & G
Cast iron frame
For inverter capabilities see table at end of this section.
Red catalog number indicates **NEW** product.

NEW!

NEW!

Explosion proof, drill rig duty, 230/460 and 460 volt

1/2 thru 200 Hp

Features:

- Robust steel and cast iron frame designs
- 1.15 SF, Class F insulation, 40°C ambient
- Suitable for 55°C ambient at 1.0 SF
- Inverter Duty
- DE shaft slinger, UL breather drains
- Normally closed thermostats
- Threaded lead inlet
- IP55 enclosure, marked on nameplate

Applications:

- Customer specified Division 1 hazardous Areas
- On and off shore drill rig service
- Bulk fuel terminals
- Transfer stations
- Fixed and variable speed operation

Hp	RPM	NEMA Frame	Catalog Number	XP Cls/ Grp	Temp Code	List Price	Disc. Sym.	"C" Dim.	Aprx. Wt. (lb)	Full Load Efficiency	Voltage	Full Load Amps	Notes (a)
Foot mounted													
	3600	143T	**DRX14124T**	④	T3C	2,300	XDM	14.22	41	84	230/460	1.4	10, 19
1	1800	143T	**DRX14144T**	④	T3C	2,465	XDM	14.22	50	85.5	230/460	1.5	10, 19
	1200	145T	**DRX14164T**	④	T3C	3,102	XDM	15.09	49	82.5	230/460	1.8	10, 19
	3600	143T	**DRX141524T**	④	T3C	2,432	XDM	14.22	47	84	230/460	1.9	10, 19
1 1/2	1800	145T	**DRX141544T**	④	T3C	2,503	XDM	15.09	50	86.5	230/460	2.2	10, 19
	1200	182T	**DRX181564T**	④	T3C	3,712	XDM	17.56	149	87.5	230/460	2.5	19
	3600	145T	**DRX14224T**	④	T3C	2,842	XDM	15.09	55	85.5	230/460	2.5	19
2	1800	145T	**DRX14244T**	④	T3C	2,567	XDM	15.09	59	86.5	230/460	2.9	19
	1200	184T	**DRX18264T**	④	T3C	4,043	XDM	17.56	152	88.5	230/460	3.15	19
	3600	182T	**DRX18324T**	④	T3C	3,417	XDM	17.56	150	86.5	230/460	3.8	19
3	1800	182T	**DRX18344T**	④	T3C	2,735	XDM	17.56	111	89.5	230/460	4.1	19
	1200	213T	**DRX21364T**	④	T3C	4,568	XDM	20.03	200	89.6	230/460	4.5	19
	3600	184T	**DRX18524T**	④	T3C	4,006	XDM	17.56	122	88.5	230/460	5.5	19, 35
5	1800	184T	**DRX18544T**	④	T3C	3,247	XDM	17.56	152	89.5	230/460	6.6	19
	1200	215T	**DRX21564T**	④	T3C	5,070	XDM	20.03	245	89.8	230/460	7.1	19
	3600	213T	**DRX21724T**	④	T3C	4,621	XDM	20.03	184	90.7	230/460	9	19
7 1/2	1800	213T	**DRX21744T**	④	T3C	4,118	XDM	20.03	193	91.7	230/460	10.1	19, 35
	1200	254T	**DRX25764T**	④	T3C	5,816	XDM	25.50	374	91	230/460	11	10, 19, 35
	3600	215T	**DRX21124T**	④	T3C	4,849	XDM	20.03	174	90.2	230/460	11.8	19
10	1800	215T	**DRX21144T**	④	T3C	5,666	XDM	20.03	252	91.7	230/460	12.5	19, 35
	1200	256T	**DRX25164T**	④	T3C	6,993	XDM	25.50	400	91	230/460	15	10, 19, 35
	3600	254T	**DRX251524T**	④	T3C	5,483	XDM	25.50	349	91	230/460	17.2	19, 35
15	1800	254T	**DRX251544T**	④	T3C	6,425	XDM	25.50	373	92.4	230/460	18.1	19, 35
	1200	284T	**DRX281564T**	④	T3C	11,271	XDM	28.61	478	91.7	230/460	21	10, 19, 35
	3600	256T	**DRX25224T**	④	T3C	7,229	XDM	25.50	317	91	230/460	22	19, 35
20	1800	256T	**DRX25244T**	④	T3C	8,324	XDM	25.50	336	93	230/460	24	19, 35
	1200	286T	**DRX28264T**	④	T3C	11,573	XDM	28.61	475	91.7	230/460	25	10, 19
	3600	284TS	**DRX282524T**	④	T3C	9,488	XDM	27.23	445	91.7	230/460	28.5	10, 19
25	1800	284T	**DRX282544T**	④	T3C	10,097	XDM	28.61	448	93.6	230/460	31	19, 35
	1200	324T	**DRX322564T**	④	T3C	14,469	XDM	32.00	741	93	230/460	32	10, 19, 35
	3600	286TS	**DRX28324T**	④	T3C	11,327	XDM	27.23	495	91.7	230/460	33	10, 19
30	1800	286T	**DRX28344T**	④	T3C	12,310	XDM	28.61	461	93.6	230/460	36	19, 35
	1200	326T	**DRX32364T**	④	T3C	15,964	XDM	32.00	766	93	230/460	39	10, 19, 35
	3600	324TS	**DRX32424T**	④	T3C	14,669	XDM	30.50	745	92.4	230/460	45	10, 19, 35
40	1800	324T	**DRX32444T**	④	T3C	16,498	XDM	32.00	720	94.1	230/460	48	19, 35
	1200	364T	**DRX36464T**	④	T3C	19,213	XDM	33.48	908	94.1	230/460	49.8	10
	3600	326TS	**DRX32524T**	④	T3C	18,782	XDM	30.50	766	93	230/460	56	10, 19, 35
50	1800	326T	**DRX32544T**	④	T3C	19,151	XDM	32.00	790	94.5	230/460	59	19, 35
	1200	365T	**DRX36564T**	④	T3C	21,685	XDM	33.48	908	94.1	230/460	61.7	10

(a) See notes on inside back flap. ④ = Class I, Group C & D Cast iron frame
For inverter capabilities see table at end of this section.
Red catalog number indicates **NEW** product.

NEW!

NEW!

Explosion proof, drill rig duty, 230/460 and 460 volt

Hp	RPM	NEMA Frame	Catalog Number	XP Cls/ Grp	Temp Code	List Price	Disc. Sym.	"C" Dim.	Aprx. Wt. (lb)	Full Load Efficiency	Voltage	Full Load Amps	Notes (a)
Foot mounted (continued)													
60	3600	364TS	**DRX36624T**	④	T3C	22,102	XDM	31.35	999	93.6	230/460	65.1	10
	1800	364T	**DRX36644T**	④	T3C	22,245	XDM	33.48	910	95	230/460	67.8	
	1200	404T	**DRX40664T**	④	T3C	27,376	XDM	38.22	1322	94.5	230/460	69	10
75	3600	365TS	**DRX36724T**	④	T3C	23,050	XDM	31.35	1005	93.6	230/460	81.8	10
	1800	365T	**DRX36744T**	④	T3C	24,423	XDM	33.48	966	95.4	230/460	86	
	1200	405T	**DRX40764T**	④	T3C	28,354	XDM	38.22	1322	94.5	230/460	87	10
100	1800	405T	**DRX40144T**	④	T3C	28,364	XDM	38.22	1326	95.4	230/460	112	
	1200	444T	**DRX44164T**	④	T3C	33,678	XDM	44.97	1800	95	230/460	116	10
125	1800	444T	**DRX441244T**	④	T3C	34,239	XDM	44.97	1669	95.4	460	144	
	1200	445T	**DRX441264T**	④	T3C	36,818	XDM	44.97	1913	95	460	144	10
150	1800	445T	**DRX441544T**	④	T3C	38,264	XDM	44.97	1826	95.8	460	169	10
200	1800	447T	**DRX44244T**	④	T3C	52,944	XDM	48.47	2676	96.2	460	222	10
C-Face, foot mounted													
1/2	1800	56C	**CDRX050544**	④	T3C	1,764	XDM	13.14	37	80	230/460	0.8	19, 60
3/4	1800	56C	**CDRX050744**	④	T3C	1,928	XDM	14.28	33	78.5	230/460	1.4	19
1	3600	143TC	**CDRX14124T**	④	T3C	2,406	XDM	14.36	41	84	230/460	1.4	10, 19
	1800	143TC	**CDRX14144T**	④	T3C	2,570	XDM	14.36	50	85.5	230/460	1.5	19
		56C	**CDRX05144**	④	T3C	2,557	XDM	14.28	50	85.5	230/460	1.5	19
	1200	145TC	**CDRX14164T**	④	T3C	3,208	XDM	15.23	49	82.5	230/460	1.8	19
1 1/2	3600	143TC	**CDRX141524T**	④	T3C	2,538	XDM	14.36	47	84	230/460	1.9	10, 19
	1800	145TC	**CDRX141544T**	④	T3C	2,608	XDM	15.23	50	86.5	230/460	2.2	19
	1200	182TC	**CDRX181564T**	④	T3C	4,230	XDM	18.31	149	87.5	230/460	2.5	10, 19
2	3600	145TC	**CDRX14224T**	④	T3C	2,948	XDM	15.23	46	85.5	230/460	2.5	10, 19
	1800	145TC	**CDRX14244T**	④	T3C	2,673	XDM	15.23	48	86.5	230/460	2.9	19
	1200	184TC	**CDRX18264T**	④	T3C	4,561	XDM	18.31	152	88.5	230/460	3.15	19
3	3600	182TC	**CDRX18324T**	④	T3C	3,936	XDM	18.31	127	86.5	230/460	3.8	19
	1800	182TC	**CDRX18344T**	④	T3C	3,254	XDM	18.31	111	89.5	230/460	4.1	19
	1200	213TC	**CDRX21364T**	④	T3C	5,129	XDM	20.78	221	89.5	230/460	4.5	10, 19
5	3600	184TC	**CDRX18524T**	④	T3C	4,525	XDM	18.31	150	88.5	230/460	5.5	19, 35
	1800	184TC	**CDRX18544T**	④	T3C	3,766	XDM	18.31	123	89.5	230/460	6.6	19
	1200	215TC	**CDRX21564T**	④	T3C	5,632	XDM	20.78	245	89.8	230/460	7.1	10, 19
7 1/2	3600	213TC	**CDRX21724T**	④	T3C	5,182	XDM	20.78	184	90.7	230/460	9	10, 19
	1800	213TC	**CDRX21744T**	④	T3C	4,680	XDM	20.78	154	91.7	230/460	10.1	19, 35
	1200	254TC	**CDRX25764T**	④	T3C	6,867	XDM	26.00	374	91	230/460	11	10, 19, 35
10	3600	215TC	**CDRX21124T**	④	T3C	5,411	XDM	20.78	174	90.2	230/460	11.8	19
	1800	215TC	**CDRX21144T**	④	T3C	6,228	XDM	20.78	252	91.7	230/460	12.5	19, 35
	1200	256TC	**CDRX25164T**	④	T3C	8,044	XDM	26.00	327	91	230/460	15	10, 19, 35
15	3600	254TC	**CDRX251524T**	④	T3C	6,534	XDM	26.00	349	91	230/460	17.2	10, 19, 35
	1800	254TC	**CDRX251544T**	④	T3C	7,476	XDM	26.00	302	92.4	230/460	18.1	19, 35
	1200	284TC	**CDRX281564T**	④	T3C	12,627	XDM	28.61	478	91.7	230/460	21	10, 19, 35
20	3600	256TC	**CDRX25224T**	④	T3C	8,279	XDM	26.00	390	91	230/460	22	10, 19, 35
	1800	256TC	**CDRX25244T**	④	T3C	9,374	XDM	26.00	335	93	230/460	24	19, 35
	1200	286TC	**CDRX28264T**	④	T3C	12,928	XDM	28.61	459	91.7	230/460	25	10, 19
25	3600	284TSC	**CDRX282524T**	④	T3C	10,843	XDM	27.23	408	91.7	230/460	28.5	19
	1800	284TC	**CDRX282544T**	④	T3C	11,453	XDM	28.61	447	93.6	230/460	31	19, 35
	1200	324TC	**CDRX322564T**	④	T3C	16,071	XDM	32.00	741	93	230/460	32	10, 19, 35
30	3600	286TSC	**CDRX28324T**	④	T3C	12,683	XDM	27.23	438	91.7	230/460	33	10, 19
	1800	286TC	**CDRX28344T**	④	T3C	13,666	XDM	28.61	518	93.6	230/460	36	10, 19, 35
	1200	326TC	**CDRX32364T**	④	T3C	17,567	XDM	32.00	766	93	230/460	39	10, 19, 35
40	3600	324TSC	**CDRX32424T**	④	T3C	16,271	XDM	30.50	593	92.4	230/460	45	10, 19, 35
	1800	324TC	**CDRX32444T**	④	T3C	18,100	XDM	32.00	720	94.1	230/460	48	10, 19, 35
	1200	364TC	**CDRX36464T**	④	T3C	21,114	XDM	33.45	908	94.1	230/460	49.8	10

(a) See notes on inside back flap.
④ = Class I, Group C & D
Cast iron frame
For inverter capabilities see table at end of this section.
Red catalog number indicates **NEW** product.

NEW!

NEW!

Explosion proof, drill rig duty, 230/460 and 460 volt

Hp	RPM	NEMA Frame	Catalog Number	XP Cls/ Grp	Temp Code	List Price	Disc. Sym.	"C" Dim.	Aprx. Wt. (lb)	Full Load Efficiency	Voltage	Full Load Amps	Notes (a)
C-Face, foot mounted (continued)													
50	3600	326TSC	**CDRX32524T**	④	T3C	20,384	XDM	30.50	648	93	230/460	56	10, 19, 35
	1800	326TC	**CDRX32544T**	④	T3C	20,753	XDM	32.00	782	94.5	230/460	59	10, 19, 35
60	1800	364TC	**CDRX36644T**	④	T3C	24,145	XDM	33.45	910	95	230/460	68	10
75	1800	365TC	**CDRX36744T**	④	T3C	26,324	XDM	33.45	965	95.4	230/460	85.9	
100	1800	405TC	**CDRX40144T**	④	T3C	30,702	XDM	38.22	1326	95.4	230/460	112	10
C-Face, footless													
1/2	1800	56C	**VDRX050544**	④	T3C	1,764	XDM	13.14	37	80	230/460	0.8	19, 60
3/4	1800	56C	**VDRX050744**	④	T3C	1,928	XDM	14.31	37	78.5	230/460	1.4	19
1	1800	143TC	**VDRX14144T**	④	T3C	2,570	XDM	14.36	50	85.5	230/460	1.5	19
		56C	**VDRX05144**	④	T3C	2,557	XDM	14.31	41	85.5	230/460	1.5	19
1 1/2	1800	145TC	**VDRX141544T**	④	T3C	2,608	XDM	15.23	46	86.5	230/460	2.2	19
		56C	**VDRX051544**	④	T3C	2,595	XDM	15.17	46	86.5	230/460	2.2	19
2	1800	145TC	**VDRX14244T**	④	T3C	2,673	XDM	15.23	59	86.5	230/460	2.9	19
3	1800	182TC	**VDRX18344T**	④	T3C	3,254	XDM	18.31	127	89.5	230/460	4.1	19
5	1800	184TC	**VDRX18544T**	④	T3C	3,766	XDM	18.31	123	89.5	230/460	6.6	19
7 1/2	1800	213TC	**VDRX21744T**	④	T3C	4,680	XDM	20.77	228	91.7	230/460	10.1	19, 35
10	1800	215TC	**VDRX21144T**	④	T3C	6,228	XDM	20.77	252	91.7	230/460	12.5	19, 35
15	1800	254TC	**VDRX251544T**	④	T3C	7,476	XDM	26.00	373	92.4	230/460	18.1	10, 19, 35
20	1800	256TC	**VDRX25244T**	④	T3C	9,374	XDM	26.00	335	93	230/460	24	10, 19, 35
25	1800	284TC	**VDRX282544T**	④	T3C	11,453	XDM	28.67	506	93.6	230/460	31	10, 19, 35
30	1800	286TC	**VDRX28344T**	④	T3C	13,666	XDM	28.67	518	93.6	230/460	36	10, 19, 35
40	1800	324TC	**VDRX32444T**	④	T3C	18,100	XDM	32.00	720	94.1	230/460	48	10, 19, 35
50	1800	326TC	**VDRX32544T**	④	T3C	20,753	XDM	32.00	782	94.5	230/460	59	10, 19, 35

(a) See notes on inside back flap.
④ = Class I, Group C & D
Cast iron frame
For inverter capabilities see table at end of this section.
Red catalog number indicates **NEW** product.

NEW!

Explosion proof, drill rig duty, 575 volt

1 thru 100 Hp

Features:

- Robust steel and cast iron frame designs
- 1.15 SF, Class F insulation, 40°C ambient
- Suitable for 55°C ambient at 1.0 SF
- Inverter Duty
- DE shaft slinger, UL breather drains
- Normally closed thermostats
- Threaded lead inlet
- IP55 enclosure, marked on nameplate

Applications:

- Customer specified Division 1 hazardous areas
- Chemical, oil & gas industrial pumps
- Fixed and variable speed operation

Hp	RPM	NEMA Frame	Catalog Number	XP Cls/ Grp	Temp Code	List Price	Disc. Sym.	"C" Dim.	Aprx. Wt. (lb)	Full Load Efficiency	Voltage	Full Load Amps	Notes (a)
Foot mounted													
1	3600	143T	**DRX14124T-5**	④	T3C	2,300	XDM	14.22	38	84	575	1.1	10
	1800	143T	**DRX14144T-5**	④	T3C	2,465	XDM	14.22	50	85.5	575	1.2	10
2	3600	145T	**DRX14224T-5**	④	T3C	2,842	XDM	15.09	55	85.5	575	2	10
	1800	145T	**DRX14244T-5**	④	T3C	2,567	XDM	15.09	59	86.5	575	2.3	10
3	3600	182T	**DRX18324T-5**	④	T3C	3,417	XDM	17.56	127	86.5	575	3	10
	1800	182T	**DRX18344T-5**	④	T3C	2,735	XDM	17.56	111	89.5	575	3.3	10
5	3600	184T	**DRX18524T-5**	④	T3C	4,006	XDM	17.56	122	88.5	575	4.5	10, 35
	1800	184T	**DRX18544T-5**	④	T3C	3,247	XDM	17.56	123	89.5	575	5.3	10
7 1/2	3600	213T	**DRX21724T-5**	④	T3C	4,621	XDM	20.03	184	89.5	575	7.2	10
	1800	213T	**DRX21744T-5**	④	T3C	4,118	XDM	20.03	228	91.7	575	7.5	10, 35
10	3600	215T	**DRX21124T-5**	④	T3C	4,849	XDM	20.03	235	90.2	575	9	10
	1800	215T	**DRX21144T-5**	④	T3C	5,666	XDM	20.03	252	92.4	575	10.1	10, 35
15	3600	254T	**DRX251524T-5**	④	T3C	5,483	XDM	25.50	349	91	575	13.7	10, 35
	1800	254T	**DRX251544T-5**	④	T3C	6,425	XDM	25.50	302	92.4	575	14.6	10, 35
20	3600	256T	**DRX25224T-5**	④	T3C	7,229	XDM	25.50	315	91	575	17.5	10, 35
	1800	256T	**DRX25244T-5**	④	T3C	8,324	XDM	25.50	335	93	575	19.2	10, 35
25	3600	284TS	**DRX282524T-5**	④	T3C	9,488	XDM	27.23	525	91.7	575	23	10
	1800	284T	**DRX282544T-5**	④	T3C	10,097	XDM	28.61	506	93.6	575	25	10, 35
30	3600	286TS	**DRX28324T-5**	④	T3C	11,327	XDM	27.23	495	91.7	575	26	10
	1800	286T	**DRX28344T-5**	④	T3C	12,310	XDM	28.61	518	93.6	575	29	10, 35
40	3600	324TS	**DRX32424T-5**	④	T3C	14,669	XDM	30.50	593	92.4	575	36	10, 35
	1800	324T	**DRX32444T-5**	④	T3C	16,498	XDM	32.00	601	94.1	575	39	10, 35
50	3600	326TS	**DRX32524T-5**	④	T3C	18,782	XDM	30.50	649	93	575	45	10, 35
	1800	326T	**DRX32544T-5**	④	T3C	19,151	XDM	32.00	782	94.5	575	47	35
60	1800	364T	**DRX36644T-5**	④	T3C	22,245	XDM	33.48	965	95	575	54.7	10
75	1800	365T	**DRX36744T-5**	④	T3C	24,423	XDM	33.48	965	95.4	575	68.5	10
100	1800	405T	**DRX40144T-5**	④	T3C	28,364	XDM	38.22	1326	95.4	575	89.6	10
C-Face, foot mounted													
1	3600	143TC	**CDRX14124T-5**	④	T3C	2,406	XDM	14.36	41	84	575	1.1	10
	1800	143TC	**CDRX14144T-5**	④	T3C	2,570	XDM	14.36	50	85.5	575	1.2	
2	3600	145TC	**CDRX14224T-5**	④	T3C	2,948	XDM	15.23	55	85.5	575	2	10
	1800	145TC	**CDRX14244T-5**	④	T3C	2,673	XDM	15.23	59	86.5	575	2.3	10
3	3600	182TC	**CDRX18324T-5**	④	T3C	3,936	XDM	18.31	127	86.5	575	3	10
	1800	182TC	**CDRX18344T-5**	④	T3C	3,254	XDM	18.31	127	89.5	575	3.3	
5	3600	184TC	**CDRX18524T-5**	④	T3C	4,525	XDM	18.31	150	88.5	575	4.5	10, 35
	1800	184TC	**CDRX18544T-5**	④	T3C	3,766	XDM	18.31	152	89.5	575	5.3	10
7 1/2	3600	213TC	**CDRX21724T-5**	④	T3C	5,182	XDM	20.78	169	89.5	575	7.2	10
	1800	213TC	**CDRX21744T-5**	④	T3C	4,680	XDM	20.78	193	91.7	575	7.5	10, 35

(a) See notes on inside back flap. Cast iron frame
④ = Class I, Group C & D
For inverter capabilities see table at end of this section.
Red catalog number indicates **NEW** product.

NEW!

NEW!

Explosion proof, drill rig duty, 575 volt

Hp	RPM	NEMA Frame	Catalog Number	XP Cls/ Grp	Temp Code	List Price	Disc. Sym.	"C" Dim.	Aprx. Wt. (lb)	Full Load Efficiency	Voltage	Full Load Amps	Notes (a)
C-Face, foot mounted (continued)													
10	3600	215TC	**CDRX21124T-5**	④	T3C	5,411	XDM	20.78	235	90.2	575	9	
	1800	215TC	**CDRX21144T-5**	④	T3C	6,228	XDM	20.78	252	92.4	575	10.1	35
15	3600	254TC	**CDRX251524T-5**	④	T3C	6,534	XDM	26.00	349	91	575	13.7	10, 35
	1800	254TC	**CDRX251544T-5**	④	T3C	7,476	XDM	26.00	373	92.4	575	14.6	35
20	3600	256TC	**CDRX25224T-5**	④	T3C	8,279	XDM	26.00	390	91	575	17.5	10, 35
	1800	256TC	**CDRX25244T-5**	④	T3C	9,374	XDM	26.00	335	93	575	19.2	10, 35
25	3600	284TSC	**CDRX282524T-5**	④	T3C	10,843	XDM	27.23	525	91.7	575	23	10
	1800	284TC	**CDRX282544T-5**	④	T3C	11,453	XDM	28.61	506	93.6	575	25	10, 35
30	3600	286TSC	**CDRX28324T-5**	④	T3C	12,683	XDM	27.23	495	91.7	575	26	10
	1800	286TC	**CDRX28344T-5**	④	T3C	13,666	XDM	28.61	518	93.6	575	29	10, 35
40	3600	324TSC	**CDRX32424T-5**	④	T3C	16,271	XDM	30.50	745	92.4	575	36	10, 35
	1800	324TC	**CDRX32444T-5**	④	T3C	18,100	XDM	32.00	720	94.1	575	39	10, 35
50	3600	326TSC	**CDRX32524T-5**	④	T3C	20,384	XDM	30.50	766	93	575	45	10, 35
	1800	326TC	**CDRX32544T-5**	④	T3C	20,753	XDM	32.00	782	94.5	575	47	10, 35

(a) See notes on inside back flap.
④ = Class I, Group C & D
For inverter capabilities see table at end of this section.
Cast iron frame
Red catalog number indicates **NEW** product.

NEW!

Explosion proof, drill rig duty, single phase

1/3 thru 1 Hp

Features:

- Steel band frame, cast iron endplates and conduit box
- 1.15 SF, Class F insulation, 40°C ambient
- Suitable for 55°C ambient at 1.0 SF
- DE shaft slinger, UL breather drains
- Normally closed thermostats
- Threaded lead inlet
- IP55 enclosure, marked on nameplate

Applications:

- Customer specified Division 1 hazardous areas
- Chemical, oil & gas
- Fixed speed operation

Hp	RPM	NEMA Frame	Catalog Number	XP Cls/ Grp	Temp Code	List Price	Disc. Sym.	"C" Dim.	Aprx. Wt. (lb)	Full Load Efficiency	Voltage	Full Load Amps	Notes (a)
1/3	1800	56C	**CDRXL050344**	④	T3C	1,507	XDP	14.31	35	55	115/230	3.3	
1/2	1800	56C	**CDRXL050544**	④	T3C	1,597	XDP	14.31	43	68	115/230	3.7	
3/4	1800	56C	**CDRXL050744**	④	T3C	1,745	XDP	15.17	53	68	115/230	5.3	
1	1800	56C	**CDRXL05144**	④	T3C	1,912	XDP	16.05	57	68	115/230	6	

(a) See notes on inside back flap.
④ = Class I, Group C & D
Red catalog number indicates **NEW** product.
These explosion-proof motors are not suitable for use with adjustable speed drives.
Please see the table at the end of this section for a list of inverter capable motors.

Explosion proof, drill rig duty, close coupled pump, 230/460 and 575 volt

3 thru 10 Hp

Features:

- Cast iron frame, endplates, conduit box and fan cover
- 1.15 SF, Class F insulation, 40°C ambient
- Suitable for 55°C ambient at 1.0 SF
- Inverter Duty
- DE shaft slinger, UL breather drains
- Normally closed thermostats
- Threaded lead inlet
- IP55 enclosure, marked on nameplate

Applications:

- Customer specified Division 1 hazardous areas
- Chemical, oil & gas industrial pumps
- Fixed and variable speed operation

Hp	RPM	NEMA Frame	Catalog Number	XP Cls/ Grp	Temp Code	List Price	Disc. Sym.	"C" Dim.	Aprx. Wt. (lb)	Full Load Efficiency	Voltage	Full Load Amps	Notes (a)
230/460 Volts													
3	1800	182JP	**JPDRX18344T**	④	T3C	3,473	XDP	22.09	127	89.5	230/460	4.1	19
5	1800	184JP	**JPDRX18544T**	④	T3C	3,985	XDP	22.09	152	89.5	230/460	6.6	19
7 1/2	1800	213TCZ	**JPDRX21744TY**	④	T3C	5,082	XDP	25.65	228	91.7	230/460	10.1	19, 35, 97
10	1800	215TCZ	**JPDRX21144TY**	④	T3C	6,629	XDP	25.65	252	91.7	230/460	12.5	19, 35, 97
575 Volts													
3	1800	182JP	**JPDRX18344T-5**	④	T3C	3,473	XDP	22.09	127	89.5	575	3.3	
5	1800	184JP	**JPDRX18544T-5**	④	T3C	3,985	XDP	22.09	152	89.5	575	5.3	10
7 1/2	1800	213TCZ	**JPDRX21744TY-5**	④	T3C	5,082	XDP	25.65	228	91.7	575	7.5	10, 35, 97
10	1800	215JP	**JPDRX21144TY-5**	④	T3C	6,629	XDP	25.65	252	92.4	575	10.1	10, 35, 97

(a) See notes on inside back flap. Cast iron frame
④ = Class I, Group C & D
Red catalog number indicates **NEW** product.
For inverter capabilities see table at end of this section

NEW!

Division 1 Inverter capabilities

The following list of Explosion Proof motors are marked for Division 1 on both sine wave and inverter power.

Division 1 Temp Codes are provided in the standard format per the NEC Article 500 requirements.
Please reference the following table for Temperature and Temp Code values.

Maximum Surface Temperature	US (NEC 500) CA (CEC Annex J)	US (NEC 505) CA (CEC Section 18)
450° C	T1	T1
300° C	T2	T2
280° C	T2A	–
260° C	T2B	–
230° C	T2C	–
215° C	T2D	–
200° C	T3	T3

Maximum Surface Temperature	US (NEC 500) CA (CEC Annex J)	US (NEC 505) CA (CEC Section 18)
180° C	T3A	–
165° C	T3B	–
160° C	T3C	–
135° C	T4	T4
120° C	T4A	–
100° C	T5	T5
85° C	T6	T6

XP Class & Group Symbol	Description
①	Class I, Group D
②	Class I, Group D, Class II, Group F & G
③	Class I, Group D, Class II, Group E, F & G
④	Class I, Group C & D
⑤	Class I, Group C & D, Class II, Group F & G
⑥	Class I, Group C & D, Class II, Group E, F & G

Catalog Number	XP Class/Group Symbol	Sine Wave & Inverter Temp	V.T. Speed Range (Hz)	C.T. Speed Range (Hz)	CHP Speed Range (Hz)
CBXM18342T	②	T3C	6-60	6-60	60-90
CBXM18542T	②	T3C	6-60	6-60	60-90
CBXMN050542	②	T3C	6-60	6-60	60-90
CBXMN050742	②	T3C	6-60	6-60	60-90
CBXMN14142T	②	T3C	6-60	6-60	60-90
CBXMN18242T	②	T3C	6-60	6-60	60-90
CCPX18326T	⑥	T3C	6-60	6-60	60-90
CCPX18346T	⑥	T3C	6-60	6-60	60-90
CCPX18526T	⑥	T3C	6-60	6-60	60-90
CCPX18546T	⑥	T3C	6-60	6-60	60-90
CCPX21126T	⑥	T3C	6-60	6-60	60-90
CCPX21146T	⑥	T3C	6-60	6-60	60-90
CCPX21366T	⑥	T3C	6-60	6-60	60-90
CCPX21726T	⑥	T3C	6-60	6-60	60-90
CCPX21746T	⑥	T3C	6-60	6-60	60-90
CCPX251526T	⑥	T3C	6-60	6-60	60-90
CCPX251546T	⑥	T3C	6-60	6-60	60-90
CCPX25166T	⑥	T3C	6-60	6-60	60-90
CCPX25226T	⑥	T3C	6-60	6-60	60-90
CCPX25246T	⑥	T3C	6-60	6-60	60-90
CCPX25766T	⑥	T3C	6-60	6-60	60-90
CCPX281566T	⑥	T3C	6-60	6-60	60-90
CCPX282526T	⑥	T3C	6-60	6-60	60-90
CCPX282546T	⑥	T3C	6-60	6-60	60-90
CCPX28266T	⑥	T3C	6-60	6-60	60-90
CCPX28326T	⑥	T3C	6-60	6-60	60-90
CCPX28346T	⑥	T3C	6-60	6-60	60-90
CCPX322566T	⑥	T3C	6-60	6-60	60-90
CCPX32366T	⑥	T3C	6-60	6-60	60-90
CCPX32426T	⑥	T3C	6-60	6-60	60-90
CCPX32446T	⑥	T3C	6-60	6-60	60-90
CCPX32526T	⑥	T3C	6-60	6-60	60-90
CCPX32546T	⑥	T3C	6-60	6-60	60-90
CCPX36466T	⑥	T3C	6-60	6-60	60-90
CCPX36566T	⑥	T3C	6-60	6-60	60-90

Catalog Number	XP Class/Group Symbol	Sine Wave & Inverter Temp	V.T. Speed Range (Hz)	C.T. Speed Range (Hz)	CHP Speed Range (Hz)
CCPX36626T	⑥	T3C	6-60	6-60	60-70
CCPX36646T	⑥	T3C	6-60	6-60	60-90
CCPX36726T	⑥	T3C	6-60	6-60	60-70
CCPX36746T	⑥	T3C	6-60	10-60	60-90
CCPX40666T	⑥	T3C	6-60	6-60	60-90
CCPX40766T	⑥	T3C	6-60	6-60	60-90
CDRX050544	④	T3C	6-60	6-60	60-90
CDRX050744	④	T3C	6-60	6-60	60-90
CDRX05144	④	T3C	6-60	6-60	60-90
CDRX14124T	④	T3C	6-60	6-60	60-90
CDRX14124T-5	④	T3C	6-60	6-60	60-90
CDRX14144T	④	T3C	6-60	6-60	60-90
CDRX14144T-5	④	T3C	6-60	6-60	60-90
CDRX141524T	④	T3C	6-60	6-60	60-90
CDRX141544T	④	T3C	6-60	6-60	60-90
CDRX14164T	④	T3C	6-60	6-60	60-90
CDRX14224T	④	T3C	6-60	6-60	60-90
CDRX14224T-5	④	T3C	6-60	6-60	60-90
CDRX14244T	④	T3C	6-60	6-60	60-90
CDRX14244T-5	④	T3C	6-60	6-60	60-90
CDRX181564T	④	T3C	6-60	6-60	60-90
CDRX18264T	④	T3C	6-60	6-60	60-90
CDRX18324T	④	T3C	6-60	6-60	60-90
CDRX18324T-5	④	T3C	6-60	6-60	60-90
CDRX18344T	④	T3C	6-60	6-60	60-90
CDRX18344T-5	④	T3C	6-60	6-60	60-90
CDRX18524T	④	T3C	6-60	6-60	60-90
CDRX18524T-5	④	T3C	6-60	6-60	60-90
CDRX18544T	④	T3C	6-60	6-60	60-90
CDRX18544T-5	④	T3C	6-60	6-60	60-90
CDRX21124T	④	T3C	6-60	6-60	60-90
CDRX21124T-5	④	T3C	6-60	6-60	60-90
CDRX21144T	④	T3C	6-60	6-60	60-90
CDRX21144T-5	④	T3C	6-60	6-60	60-90
CDRX21364T	④	T3C	6-60	6-60	60-90

Division 1 Inverter capabilities (continued)

Catalog Number	XP Class/Group Symbol	Sine Wave & Inverter Temp	V.T. Speed Range (Hz)	C.T. Speed Range (Hz)	CHP Speed Range (Hz)
CDRX21564T	④	T3C	6-60	6-60	60-90
CDRX21724T	④	T3C	6-60	6-60	60-90
CDRX21724T-5	④	T3C	6-60	6-60	60-90
CDRX21744T	④	T3C	6-60	6-60	60-90
CDRX21744T-5	④	T3C	6-60	6-60	60-90
CDRX251524T	④	T3C	6-60	6-60	60-90
CDRX251524T-5	④	T3C	6-60	6-60	60-90
CDRX251544T	④	T3C	6-60	6-60	60-90
CDRX251544T-5	④	T3C	6-60	6-60	60-90
CDRX25164T	④	T3C	6-60	6-60	60-90
CDRX25224T	④	T3C	6-60	6-60	60-90
CDRX25224T-5	④	T3C	6-60	6-60	60-90
CDRX25244T	④	T3C	6-60	6-60	60-90
CDRX25244T-5	④	T3C	6-60	6-60	60-90
CDRX25764T	④	T3C	6-60	6-60	60-90
CDRX281564T	④	T3C	6-60	6-60	60-90
CDRX282524T	④	T3C	6-60	6-60	60-90
CDRX282524T-5	④	T3C	6-60	6-60	60-90
CDRX282544T	④	T3C	6-60	6-60	60-90
CDRX282544T-5	④	T3C	6-60	6-60	60-90
CDRX28264T	④	T3C	6-60	6-60	60-90
CDRX28324T	④	T3C	6-60	6-60	60-90
CDRX28324T-5	④	T3C	6-60	6-60	60-90
CDRX28344T	④	T3C	6-60	6-60	60-90
CDRX28344T-5	④	T3C	6-60	6-60	60-90
CDRX322564T	④	T3C	6-60	6-60	60-90
CDRX32364T	④	T3C	6-60	6-60	60-90
CDRX32424T	④	T3C	6-60	6-60	60-90
CDRX32424T-5	④	T3C	6-60	6-60	60-90
CDRX32444T	④	T3C	6-60	6-60	60-90
CDRX32444T-5	④	T3C	6-60	6-60	60-90
CDRX32524T	④	T3C	6-60	6-60	60-90
CDRX32524T-5	④	T3C	6-60	6-60	60-90
CDRX32544T	④	T3C	6-60	6-60	60-90
CDRX32544T-5	④	T3C	6-60	6-60	60-90
CDRX36464T	④	T3C	6-60	6-60	60-90
CDRX36644T	④	T3C	6-60	6-60	60-90
CDRX36744T	④	T3C	6-60	10-60	60-90
CDRX40144T	④	T3C	6-60	6-60	60-90
CPX14146T	⑥	T3C	6-60	6-60	60-90
CPX141546T	⑥	T3C	6-60	6-60	60-90
CPX14246T	⑥	T3C	6-60	6-60	60-90
CPX18326T	⑥	T3C	6-60	6-60	60-90
CPX18346T	⑥	T3C	6-60	6-60	60-90
CPX18526T	⑥	T3C	6-60	6-60	60-90
CPX18546T	⑥	T3C	6-60	6-60	60-90
CPX21126T	⑥	T3C	6-60	6-60	60-90
CPX21146T	⑥	T3C	6-60	6-60	60-90
CPX21366T	⑥	T3C	6-60	6-60	60-90
CPX21566T	⑥	T3C	6-60	6-60	60-90
CPX21726T	⑥	T3C	6-60	6-60	60-90
CPX21746T	⑥	T3C	6-60	6-60	60-90
CPX251526T	⑥	T3C	6-60	6-60	60-90
CPX251546T	⑥	T3C	6-60	6-60	60-90
CPX25166T	⑥	T3C	6-60	6-60	60-90
CPX25226T	⑥	T3C	6-60	6-60	60-90
CPX25246T	⑥	T3C	6-60	6-60	60-90
CPX25766T	⑥	T3C	6-60	6-60	60-90
CPX281566T	⑥	T3C	6-60	6-60	60-90
CPX282526T	⑥	T3C	6-60	6-60	60-90

Catalog Number	XP Class/Group Symbol	Sine Wave & Inverter Temp	V.T. Speed Range (Hz)	C.T. Speed Range (Hz)	CHP Speed Range (Hz)
CPX282546T	⑥	T3C	6-60	6-60	60-90
CPX28266T	⑥	T3C	6-60	6-60	60-90
CPX28326T	⑥	T3C	6-60	6-60	60-90
CPX28346T	⑥	T3C	6-60	6-60	60-90
CPX322566T	⑥	T3C	6-60	6-60	60-90
CPX32366T	⑥	T3C	6-60	6-60	60-90
CPX32426T	⑥	T3C	6-60	6-60	60-90
CPX32446T	⑥	T3C	6-60	6-60	60-90
CPX32526T	⑥	T3C	6-60	6-60	60-90
CPX32546T	⑥	T3C	6-60	6-60	60-90
CPX36466T	⑥	T3C	6-60	6-60	60-90
CPX36566T	⑥	T3C	6-60	6-60	60-90
CPX36626T	⑥	T3C	6-60	6-60	60-70
CPX36646T	⑥	T3C	6-60	10-60	60-90
CPX36726T	⑥	T3C	6-60	6-60	60-70
CPX36746T	⑥	T3C	6-60	10-60	60-90
CPX40146T	⑥	T3C	6-60	6-60	60-90
CPX40666T	⑥	T3C	6-60	6-60	60-90
CPX40766T	⑥	T3C	6-60	6-60	60-90
CPX441246T	⑥	T3C	6-60	6-60	60-90
CPX441546T	⑥	T3C	6-60	10-60	60-90
CPX44166T	⑥	T3C	6-60	6-60	60-90
CPX44246T	⑥	T3C	6-60	6-60	60-90
CPX442546T	⑥	T3C	6-60	10-60	60-90
CXM050342	②	T3C	6-60	6-60	60-90
CXM050542	②	T3C	6-60	6-60	60-90
CXM050742	②	T3C	6-60	6-60	60-90
CXM05122	②	T3C	6-60	6-60	60-90
CXM05142	②	T3C	6-60	6-60	60-90
CXM051542	②	T3C	6-60	6-60	60-90
CXM05242	②	T3C	6-60	6-60	60-90
CXM14142T	②	T3C	6-60	6-60	60-90
CXM141522T	②	T3C	6-60	6-60	60-90
CXM141542T	②	T3C	6-60	6-60	60-90
CXM14222T	②	T3C	6-60	6-60	60-90
CXM14242T	②	T3C	6-60	6-60	60-90
CXM18322T	②	T3C	6-60	6-60	60-90
CXM18342T	②	T3C	6-60	6-60	60-90
CXM18522T	②	T3C	6-60	6-60	60-90
CXM18542T	②	T3C	6-60	30-60	60-90
CXM21122T	②	T3C	6-60	6-60	60-90
CXM21142T	②	T3C	6-60	15-60	60-90
CXM21722T	②	T3C	6-60	6-60	60-90
CXM21742T	②	T3C	6-60	6-60	60-90
CXM251522T	②	T3C	6-60	6-60	60-90
CXM251542T	②	T3C	6-60	6-60	60-90
CXM25222T	②	T3C	6-60	6-60	60-90
CXM25242T	②	T3C	6-60	6-60	60-90
CXM282542T	②	T3C	6-60	6-60	60-90
CXM28342T	②	T3C	6-60	6-60	60-90
CXM32442T	②	T3C	6-60	6-60	60-90
DRX14124T	④	T3C	6-60	6-60	60-90
DRX14124T-5	④	T3C	6-60	6-60	60-90
DRX14144T	④	T3C	6-60	6-60	60-90
DRX14144T-5	④	T3C	6-60	6-60	60-90
DRX141524T	④	T3C	6-60	6-60	60-90
DRX141544T	④	T3C	6-60	6-60	60-90
DRX14164T	④	T3C	6-60	6-60	60-90
DRX14224T	④	T3C	6-60	6-60	60-90
DRX14224T-5	④	T3C	6-60	6-60	60-90

Division 1 Inverter capabilities (continued)

Catalog Number	XP Class/Group Symbol	Sine Wave & Inverter Temp	V.T. Speed Range (Hz)	C.T. Speed Range (Hz)	CHP Speed Range (Hz)
DRX14244T	④	T3C	6-60	6-60	60-90
DRX14244T-5	④	T3C	6-60	6-60	60-90
DRX181564T	④	T3C	6-60	6-60	60-90
DRX18264T	④	T3C	6-60	6-60	60-90
DRX18324T	④	T3C	6-60	6-60	60-90
DRX18324T-5	④	T3C	6-60	6-60	60-90
DRX18344T	④	T3C	6-60	6-60	60-90
DRX18344T-5	④	T3C	6-60	6-60	60-90
DRX18524T	④	T3C	6-60	6-60	60-90
DRX18524T-5	④	T3C	6-60	6-60	60-90
DRX18544T	④	T3C	6-60	6-60	60-90
DRX18544T-5	④	T3C	6-60	6-60	60-90
DRX21124T	④	T3C	6-60	6-60	60-90
DRX21124T-5	④	T3C	6-60	6-60	60-90
DRX21144T	④	T3C	6-60	6-60	60-90
DRX21144T-5	④	T3C	6-60	6-60	60-90
DRX21364T	④	T3C	6-60	6-60	60-90
DRX21564T	④	T3C	6-60	6-60	60-90
DRX21724T	④	T3C	6-60	6-60	60-90
DRX21724T-5	④	T3C	6-60	6-60	60-90
DRX21744T	④	T3C	6-60	6-60	60-90
DRX21744T-5	④	T3C	6-60	6-60	60-90
DRX251524T	④	T3C	6-60	6-60	60-90
DRX251524T-5	④	T3C	6-60	6-60	60-90
DRX251544T	④	T3C	6-60	6-60	60-90
DRX251544T-5	④	T3C	6-60	6-60	60-90
DRX25164T	④	T3C	6-60	6-60	60-90
DRX25224T	④	T3C	6-60	6-60	60-90
DRX25224T-5	④	T3C	6-60	6-60	60-90
DRX25244T	④	T3C	6-60	6-60	60-90
DRX25244T-5	④	T3C	6-60	6-60	60-90
DRX25764T	④	T3C	6-60	6-60	60-90
DRX281564T	④	T3C	6-60	6-60	60-90
DRX282524T	④	T3C	6-60	6-60	60-90
DRX282524T-5	④	T3C	6-60	6-60	60-90
DRX282544T	④	T3C	6-60	6-60	60-90
DRX282544T-5	④	T3C	6-60	6-60	60-90
DRX28264T	④	T3C	6-60	6-60	60-90
DRX28324T	④	T3C	6-60	6-60	60-90
DRX28324T-5	④	T3C	6-60	6-60	60-90
DRX28344T	④	T3C	6-60	6-60	60-90
DRX28344T-5	④	T3C	6-60	6-60	60-90
DRX322564T	④	T3C	6-60	6-60	60-90
DRX32364T	④	T3C	6-60	6-60	60-90
DRX32424T	④	T3C	6-60	6-60	60-90
DRX32424T-5	④	T3C	6-60	6-60	60-90
DRX32444T	④	T3C	6-60	6-60	60-90
DRX32444T-5	④	T3C	6-60	6-60	60-90
DRX32524T	④	T3C	6-60	6-60	60-90
DRX32524T-5	④	T3C	6-60	6-60	60-90
DRX32544T	④	T3C	6-60	6-60	60-90
DRX32544T-5	④	T3C	6-60	6-60	60-90
DRX36464T	④	T3C	6-60	6-60	60-90
DRX36564T	④	T3C	6-60	6-60	60-90
DRX36624T	④	T3C	6-60	6-60	60-70
DRX36644T	④	T3C	6-60	15-60	60-90
DRX36644T-5	④	T3C	6-60	6-60	60-90
DRX36724T	④	T3C	6-60	6-60	60-70
DRX36744T	④	T3C	6-60	15-60	60-90
DRX36744T-5	④	T3C	6-60	10-60	60-90

Catalog Number	XP Class/Group Symbol	Sine Wave & Inverter Temp	V.T. Speed Range (Hz)	C.T. Speed Range (Hz)	CHP Speed Range (Hz)
DRX40144T	④	T3C	6-60	6-60	60-90
DRX40144T-5	④	T3C	6-60	6-60	60-90
DRX40664T	④	T3C	6-60	6-60	60-90
DRX40764T	④	T3C	6-60	6-60	60-90
DRX441244T	④	T3C	6-60	6-60	60-90
DRX441264T	④	T3C	6-60	10-60	60-90
DRX441544T	④	T3C	6-60	10-60	60-90
DRX44164T	④	T3C	6-60	6-60	60-90
DRX44244T	④	T3C	6-60	6-60	60-90
JMXM18322T	②	T3C	6-60	6-60	60-90
JMXM18522T	②	T3C	6-60	6-60	60-90
JMXM21122T	②	T2D	6-60	6-60	60-90
JMXM21722T	②	T3C	6-60	6-60	60-90
JPDRX18344T	④	T3C	6-60	6-60	60-90
JPDRX18344T-5	④	T3C	6-60	6-60	60-90
JPDRX18544T	④	T3C	6-60	6-60	60-90
JPDRX18544T-5	④	T3C	6-60	6-60	60-90
JPDRX21144TY	④	T3C	6-60	6-60	60-90
JPDRX21144TY-5	④	T3C	6-60	6-60	60-90
JPDRX21744TY	④	T3C	6-60	6-60	60-90
JPDRX21744TY-5	④	T3C	6-60	6-60	60-90
JXM05122	②	T3C	6-60	6-60	60-90
JXM051522	②	T3C	6-60	6-60	60-90
JXM05222	②	T3C	6-60	6-60	60-90
VDRX050544	④	T3C	6-60	6-60	60-90
VDRX050744	④	T3C	6-60	6-60	60-90
VDRX05144	④	T3C	6-60	6-60	60-90
VDRX051544	④	T3C	6-60	6-60	60-90
VDRX14144T	④	T3C	6-60	6-60	60-90
VDRX141544T	④	T3C	6-60	6-60	60-90
VDRX14244T	④	T3C	6-60	6-60	60-90
VDRX18344T	④	T3C	6-60	6-60	60-90
VDRX18544T	④	T3C	6-60	6-60	60-90
VDRX21144T	④	T3C	6-60	6-60	60-90
VDRX21744T	④	T3C	6-60	6-60	60-90
VDRX251544T	④	T3C	6-60	6-60	60-90
VDRX25244T	④	T3C	6-60	6-60	60-90
VDRX282544T	④	T3C	6-60	6-60	60-90
VDRX28344T	④	T3C	6-60	6-60	60-90
VDRX32444T	④	T3C	6-60	6-60	60-90
VDRX32544T	④	T3C	6-60	6-60	60-90
VXM050542-5	②	T3C	6-60	6-60	60-90
VXM050742-5	②	T3C	6-60	6-60	60-90
VXM05122	②	T3C	6-60	6-60	60-90
VXM05142	②	T3C	6-60	6-60	60-90
VXM05142-5	②	T3C	6-60	6-60	60-90
VXM051542	②	T3C	6-60	6-60	60-90
VXM05162	②	T3C	6-60	6-60	60-90
VXM05242	②	T3C	6-60	6-60	60-90
VXM14142T	②	T3C	6-60	6-60	60-90
VXM14142T-5	②	T3C	6-60	6-60	60-90
VXM141522T	②	T3C	6-60	6-60	60-90
VXM141542T	②	T3C	6-60	6-60	60-90
VXM141542T-5	②	T3C	6-60	6-60	60-90
VXM141562T	②	T2C	6-60	6-60	60-90
VXM14222T	②	T3C	6-60	6-60	60-90
VXM14242T	②	T3C	6-60	6-60	60-90
VXM14242T-5	②	T3C	6-60	6-60	60-90
VXM18322T	②	T3C	6-60	6-60	60-90
VXM18342T	②	T3C	6-60	6-60	60-90

Division 1 Inverter capabilities (continued)

Catalog Number	XP Class/Group Symbol	Sine Wave & Inverter Temp	V.T. Speed Range (Hz)	C.T. Speed Range (Hz)	CHP Speed Range (Hz)
VXM18342T-5	②	T3C	6-60	6-60	60-90
VXM18522T	②	T3C	6-60	6-60	60-90
VXM18542T	②	T3C	6-60	30-60	60-90
VXM18542T-5	②	T3C	6-60	30-60	60-90
VXM21142T	②	T3C	6-60	15-60	60-90
VXM21722T	②	T3C	6-60	6-60	60-90
VXM21742T	②	T3C	6-60	6-60	60-90
VXM21742T-5	②	T3C	6-60	6-60	60-90
XM050542-5	②	T3C	6-60	6-60	60-90
XM050742-5	②	T3C	6-60	6-60	60-90
XM05122	②	T3C	6-60	6-60	60-90
XM05122-5	②	T3C	6-60	6-60	60-90
XM05142	②	T3C	6-60	1.3-60	60-90
XM05142-5	②	T3C	6-60	1.3-60	60-90
XM051542	②	T3C	6-60	1.3-60	60-90
XM05162	②	T3C	6-60	2.2-60	60-90
XM05242	②	T3C	6-60	6-60	60-90
XM14142T	②	T3C	6-60	1.3-60	60-90
XM14142T-5	②	T3C	6-60	1.3-60	60-90
XM141522T	②	T3C	6-60	1.7-60	60-90
XM141522T-5	②	T3C	6-60	6-60	60-90
XM141542T	②	T3C	6-60	1.3-60	60-90
XM141542T-5	②	T3C	6-60	1.3-60	60-90
XM14162T	②	T3C	6-60	2.2-60	60-90
XM14222T	②	T3C	6-60	1.8-60	60-90
XM14222T-5	②	T3C	6-60	1.8-60	60-90
XM14242T	②	T3C	6-60	6-60	60-90
XM14242T-5	②	T3C	6-60	1.5-60	60-90
XM18142	②	T3C	6-60	6-60	60-90
XM181562T	②	T3C	6-60	1.8-60	60-90
XM18262T	②	T3C	6-60	1.3-60	60-90
XM18322T	②	T3C	6-60	2.5-60	60-90
XM18342T	②	T3C	6-60	1.3-60	60-90
XM18342T-5	②	T3C	6-60	1.3-60	60-90
XM18522T	②	T3C	6-60	2.2-60	60-90
XM18522T-5	②	T3C	6-60	6-60	60-90
XM18542T	②	T3C	6-60	30-60	60-90
XM18542T-5	②	T3C	6-60	30-60	60-90
XM18542T-CI	②	T3C	6-60	6-60	60-90
XM21122T	②	T3C	6-60	6-60	60-90
XM21142T	②	T3C	6-60	15-60	60-90
XM21362T	②	T3C	6-60	6-60	60-90
XM21562T	②	T3C	6-60	6-60	60-90
XM21722T	②	T3C	6-60	6-60	60-90
XM21742T	②	T3C	6-60	6-60	60-90
XM21742T-5	②	T3C	6-60	6-60	60-90
XM251522T	②	T3C	6-60	6-60	60-90
XM251542T	②	T3C	6-60	6-60	60-90
XM25162T	②	T3C	6-60	6-60	60-90
XM25222T	②	T3C	6-60	30-60	60-90
XM25242T	②	T3C	6-60	6-60	60-90
XM25762T	②	T3C	6-60	6-60	60-90
XM281562T	②	T3C	6-60	6-60	60-90
XM282522T	②	T3C	6-60	6-60	60-90
XM282542T	②	T3C	6-60	6-60	60-90
XM28262T	②	T3C	6-60	6-60	60-90
XM28322T	②	T3C	6-60	6-60	60-90
XM28342T	②	T3C	6-60	12-60	60-90
XM322562T	②	T3C	6-60	6-60	60-90
XM32362T	②	T3C	6-60	6-60	60-90
XM32422T	②	T3C	6-60	6-60	60-90
XM32442T	②	T3C	6-60	6-60	60-90
XM32522T	②	T3C	6-60	6-60	60-90
XM32542T	②	T3C	6-60	20-60	60-90
XM36462T	②	T3C	6-60	6-60	60-90
XM36562T	②	T3C	6-60	6-60	60-90
XM36642T	②	T3C	6-60	6-60	60-90

Pump motors

From industrial wastewater to fire suppression systems or commercial pools, Baldor-Reliance® pump motors provide value by increasing reliability and reducing maintenance costs. Utilizing energy efficient designs, our pump motors meet NEMA Premium® efficiency and inverter ready with wide variable torque speed ranges. Motor construction can be tailored for specific applications and industries such as food processing, washdown applications or explosion proof enclosures for pumps in hazardous areas.

Key features:

- Baldor-Reliance motors meet or exceed all efficiency requirements for US, Canada and Mexico regulations
- Dynamically balanced rotor to reduce noise and increase bearing life
- Color coded and numbered leads for ease of connectivity

1/3 - 300 Horsepower

Pump motor product line		Fire Pump	Jet Pump and Close-Coupled	Vertical P-Base	Submersible	EC Titanium™
NEMA frame	Frame size range for stock products	210 - 440T	56 - 320T	180 - 360T	180 - 360T	140-210
Hp	Horsepower NEMA	10 - 300	1/3 - 50	3 - 75	1 - 100	1 - 20
Volts 60 Hz	Single phase 115/208-230 or 115/230	–	S	–	S	S
	Three phase 200 volts	–	A	A	–	S
	Three phase 200/400 volts	S	A	A	–	S
	Three phase 230/460 volts	S	S	S	–	S
	Three phase 460 volts	S	A	S	S	S
	Three phase 575 volts	–	S	A	–	–
	Three phase 230 volts	–	A	A	S	–
Speed	Speed (60 Hz)	3600 or 1800 RPM	3600 or 1800 RPM	3600 or 1800 RPM	1800 or 1200 RPM	Variable
Electrical features						
Efficiency	Baldor-Reliance motors meet or exceed all efficiency requirements for US, Canada & Mexico regulations	S	S	S	S	S
Torque	NEMA Design B torques	S	S	S	S	S
Service factor & temp. rise	1.15 service factor – continuous (most ratings)	S	S	S	S	S
	Class F insulation with Class B rise @ 1.0 service factor	S	S	S	S	S
Inverter ready	Super E® – meets NEMA MG1 Part 31.4.4.2	–	S	S	S	S
	12 lead wye delta connection	–	–	S	S	–
Mechanical features						
IP code	IP23 ingress protection	S	S	–	–	S
	IP44 ingress protection	–	S	–	–	S
	IP54 ingress protection	–	A	–	–	S
	IP55 ingress protection	–	S	S	–	–
	IP56 ingress protection	–	S	–	–	–
	IP68 ingress protection	–	–	–	S	–
	IP69 ingress protection	–	S	–	–	–
Enclosure	Enclosure type	ODP	ODP or TEFC	TEFC	TENV	TEFC
Frame	Heavy gauge steel frame	S	S	–	–	–
	Cast iron frame	S	S	S	S	–
	Lifting provisions positioned for easy handling in the application (motors over 70 Lbs)	S	S	S	S	S
Explosion proof	UL Listed for use in hazardous locations	–	S	–	S	–
Bearings	High performance ball bearings designs	S	S	S	S	S
Lubrication	Super-premium Mobil Polyrex™ EM series grease	S	S	S	S	S
Conduit box	Color coded and numbered leads for ease of connectivity	S	S	S	–	–
	Epoxy encapsulated lead connections	–	–	–	S	–
	Gasketed cast aluminum	–	S	S	–	–
	Gasketed cast iron frame	–	S	S	–	–
	25 feet of cable	–	–	–	S	–
Nameplate	Laser etched nameplate with highly legible font	S	S	S	S	S
Other key features						
Warranty	Warranty # months (NEMA Premium® Super-E®)	–	36	36	60	–
	Warranty # months	12	18	(841XL) 60	–	36

S = Standard A = Available through Mod Express® or as custom

Fire pump, three phase, ODP, foot mounted

10 thru 300 Hp

IP23

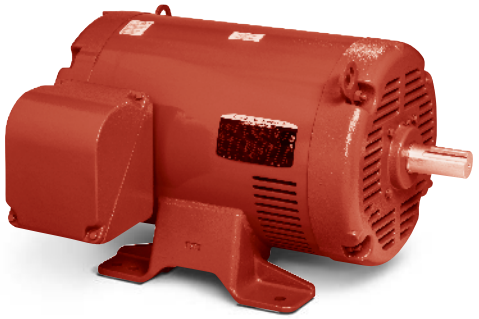

Features:

- 1.15 SF, 40°C ambient continuous
- NEMA Design B, 60 Hz
- 230/460 and 460 Volt models rated for 50 Hz at next lower Hp
- Dual voltage motors 20 Hp and larger have 12 leads, are suitable for wye-delta or across the line start on either voltage or part winding start on low voltage
- 460V motors have 12 leads and are suitable for wye-delta, across the line or part winding start
- UL file E481231
- Exterior red paint RAL3002

Applications:

- UL listed Fire Pump motors installed per NFPA-20

Hp	RPM	NEMA Frame	Catalog Number	List Price	Disc. Sym.	"C" Dim.	Aprx. Wt. (lb)	Full Load Efficiency	Voltage	Full Load Amps	Notes (a)
10	3600	213T	**FPM3312T**	2,027	PF3	16.32	121	88.5	230/460	12	1
	1800	215T	**FPM3313T**	2,281	PF3	16.32	130	89.5	230/460	12.7	1
15	3600	215T	**FPM3314T**	2,637	PF3	16.32	131	89.5	230/460	17.7	1
	1800	254T	**FPM2513T**	3,016	PF3	21.69	205	91	230/460	17.5	1
20	3600	254T	**FPM2514T**	3,144	PF3	22.25	145	90.2	230/460	23	1
	1800	256T	**FPM2515T**	3,239	PF3	21.69	210	91	230/460	24	1
25	3600	256T	**FPM2516T**	3,515	PF3	21.69	210	91	230/460	29	1
		256T	**FPM2516T-2/4**	3,515	PF3	21.69	206	91	200/400	34	1, 33
	1800	284TS	**FPM2531TS**	3,906	PF3	23.56	236	92.4	230/460	29	1
		284TS	**FPM2531TS-2/4**	3,906	PF3	23.56	236	92.4	200/400	34	1, 33
30	3600	284TS	**FPM2534T**	4,058	PF3	22.06	235	91	230/460	35	1
		284TS	**FPM2534T-2/4**	4,058	PF3	22.06	235	91	200/400	40	1, 33
	1800	286TS	**FPM2535TS**	4,848	PF3	23.69	334	92.4	230/460	36	1
		286TS	**FPM2535TS-2/4**	4,848	PF3	23.69	375	92.4	200/400	41	1, 33
40	3600	286TS	**FPM2538T**	5,156	PF3	23.56	280	91.7	230/460	45	1
		286TS	**FPM2538T-2/4**	5,156	PF3	23.56	254	91.7	200/400	52	1, 33
	1800	324TS	**FPM2539TS**	5,389	PF3	24.69	400	93	230/460	49	1
		324TS	**FPM2539TS-2/4**	5,389	PF3	24.69	380	93	200/400	56	1, 33
50	3600	324TS	**FPM2542T**	5,880	PF3	24.69	331	92.4	230/460	58	1
		324TS	**FPM2542T-2/4**	5,880	PF3	24.69	331	92.4	200/400	67	1, 33
	1800	326TS	**FPM2543TS**	5,952	PF3	25.69	385	93	230/460	60	1
		326TS	**FPM2543TS-2/4**	5,952	PF3	25.69	385	93	200/400	70	1, 33
60	3600	326TS	**FPM2546T**	7,170	PF3	25.69	385	93	230/460	68	1
		326TS	**FPM2546T-2/4**	7,170	PF3	25.69	385	93	200/400	78	1, 33
	1800	364TS	**FPM2547TS**	7,629	PF3	25.81	480	93.6	230/460	72	1
		364TS	**FPM2547TS-2/4**	7,629	PF3	27.94	480	93.6	200/400	83	1, 33
75	3600	364TS	**FPM2549T**	9,778	PF3	27.94	485	93	230/460	84	1
		364TS	**FPM2549T-2/4**	9,778	PF3	27.94	485	93	200/400	96	1, 33
	1800	365TS	**FPM2551TS**	8,582	PF3	29.94	570	94.1	230/460	87	1
		365TS	**FPM2551TS-2/4**	8,582	PF3	29.94	570	94.1	200/400	100	1, 33
100	3600	365TS	**FPM2550T**	10,612	PF3	28.94	533	93	230/460	113	1
		365TS	**FPM2550T-2/4**	10,612	PF3	28.94	533	93	200/400	130	1, 33
	1800	404TS	**FPM2555TS**	12,889	PF3	31.85	597	94.1	230/460	117	1
		404TS	**FPM2555TS-2/4**	12,889	PF3	31.85	597	94.1	200/400	135	1, 33
125	3600	404TS	**FPM2554T-4**	14,772	PF3	31.85	660	93.6	460	138	1
	1800	405TS	**FPM2559TS-4**	15,207	PF3	33.60	590	94.5	460	145	1
150	3600	405TS	**FPM2556T-4**	18,137	PF3	31.85	600	93.6	460	164	1
	1800	444TS	**FPM2558TS-4**	17,723	PF3	35.88	1579	95	460	167	
200	3600	444TS	**FPM2562T-4**	23,264	PF3	35.88	1449	94.5	460	232	
	1800	445TS	**FPM2563TS-4**	21,801	PF3	35.88	1718	95	460	224	
250	3600	445TS	**FPM2565T-4**	24,492	PF3	35.88	1737	94.5	460	288	
	1800	445TS	**FPM2566TS-4**	24,812	PF3	35.88	1844	95.4	460	272	
300	3600	445TS	**FPM2568T-4**	36,334	PF3	35.88	1697	95	460	339	

(a) See notes on inside back flap. Cast iron frame

Fire pump, three phase, ODP, foot mounted

Hp	RPM	NEMA Frame	Catalog Number	List Price	Disc. Sym.	"C" Dim.	Aprx. Wt. (lb)	Full Load Efficiency	Voltage	Full Load Amps	Notes (a)
575 volt											
20	3600	254T	**FPM2514T-5**	3,144	PF3	22.25	145	90.2	575	18.5	
	1800	256T	**FPM2515T-5**	3,239	PF3	21.69	231	91.0	575	19.6	
25	3600	256T	**FPM2516T-5**	3,515	PF3	21.69	223	91.0	575	23	
	1800	284TS	**FPM2531TS-5**	3,906	PF3	23.56	320	92.4	575	23	
30	3600	284TS	**FPM2534T-5**	4,058	PF3	22.06	240	91.0	575	28	
	1800	286TS	**FPM2535TS-5**	4,848	PF3	23.69	420	92.4	575	29	
40	3600	286TS	**FPM2538T-5**	5,156	PF3	23.56	287	91.7	575	36	
	1800	324TS	**FPM2539TS-5**	5,389	PF3	24.69	400	93.0	575	39	
50	3600	324TS	**FPM2542T-5**	5,880	PF3	24.69	449	92.4	575	46	
	1800	326TS	**FPM2543TS-5**	5,952	PF3	25.69	452	93.0	575	49	
60	3600	326TS	**FPM2546T-5**	7,170	PF3	25.69	449	93.0	575	54	
	1800	364TS	**FPM2547TS-5**	7,629	PF3	25.81	480	93.6	575	57	
75	3600	364TS	**FPM2549T-5**	9,778	PF3	25.81	480	93.0	575	67	
	1800	365TS	**FPM2551TS-5**	8,582	PF3	27.81	573	94.1	575	69	
100	3600	365TS	**FPM2550T-5**	10,612	PF3	26.81	525	93.0	575	90	
	1800	404TS	**FPM2555TS-5**	12,889	PF3	31.85	648	94.1	575	93	

(a) See notes on inside back flap.

Fire pump, three phase, ODP, footless, close-coupled pump

10 thru 100 Hp

IP23

Features:

- 1.15 SF, 40°C ambient continuous
- NEMA Design B, 60 Hz
- 230/460 Volt models rated for 50 Hz at next lower Hp
- Dual voltage motors 20 Hp and larger have 12 leads, are suitable for wye-delta or across the line start on either voltage or part winding start on low voltage
- Vertical lifting
- UL file E481231
- Exterior red paint RAL3002

Applications:

- UL listed Fire Pump motors installed per NFPA-20

Hp	RPM	NEMA Frame	Catalog Number	List Price	Disc. Sym.	"C" Dim.	Aprx. Wt. (lb)	Full Load Efficiency	Voltage	Full Load Amps	Notes (a)
10	3600	213JP	**VJPFPM3312T**	2,142	PF3	24.41	121	88.5	230/460	12	1
		213JP	**VJPFPM3312T-2/4**	2,142	PF3	24.41	121	88.5	200/400	12	1, 33
	1800	215JP	**VJPFPM3313T**	2,390	PF3	24.41	130	89.5	230/460	12.7	1
15	3600	215JP	**VJPFPM3314T**	2,752	PF3	24.41	131	89.5	230/460	17.7	1
		215JP	**VJPFPM3314T-2/4**	2,752	PF3	24.41	131	89.5	200/400	20.4	1, 33
	1800	254JP	**VJPFPM2513T**	3,419	PF3	28.07	220	91	230/460	17.5	1
20	3600	254JP	**VJPFPM2514T**	3,663	PF3	27.66	145	90.2	230/460	23	1
		254JP	**VJPFPM2514T-2/4**	3,663	PF3	27.66	145	90.2	200/400	26.5	1, 33
	1800	256JP	**VJPFPM2515T**	3,828	PF3	28.07	231	91	230/460	24	1
25	3600	256JP	**VJPFPM2516T**	4,208	PF3	28.07	221	91	230/460	29	1
		256JP	**VJPFPM2516T-2/4**	4,208	PF3	28.07	221	91	200/400	34	1, 33
	1800	284JP	**VJPFPM2531T**	4,694	PF3	31.44	272	91.7	230/460	29	1
30	3600	284JP	**VJPFPM2534T**	4,983	PF3	29.23	235	91	230/460	35	1
		284JP	**VJPFPM2534T-2/4**	4,983	PF3	29.23	235	91	200/400	40	1, 33
	1800	286JP	**VJPFPM2535T**	5,761	PF3	29.25	375	92.4	230/460	36	1
40	3600	286JP	**VJPFPM2538T**	5,956	PF3	31.44	263	91.7	230/460	45	1
		286JP	**VJPFPM2538T-2/4**	5,956	PF3	31.44	263	91.7	200/400	52	1, 33
	1800	324JP	**VJPFPM2539T**	6,928	PF3	31.13	375	93	230/460	49	1
50	3600	324JP	**VJPFPM2542T**	7,422	PF3	31.13	331	92.4	230/460	58	1
		324JP	**VJPFPM2542T-2/4**	7,422	PF3	31.13	331	92.4	200/400	67	1, 33
	1800	326JP	**VJPFPM2543T**	7,712	PF3	32.13	378	93	230/460	60	1
60	3600	326JP	**VJPFPM2546T**	8,785	PF3	32.13	385	93	230/460	68	1
		326JP	**VJPFPM2546T-2/4**	8,785	PF3	32.13	385	93	200/400	78	1, 33
	1800	364JP	**VJPFPM2547T**	9,554	PF3	32.50	480	93.6	230/460	72	1
75	3600	364JP	**VJPFPM2549T**	11,848	PF3	32.50	472	93	230/460	84	1
		364JP	**VJPFPM2549T-2/4**	11,848	PF3	32.50	472	93	200/400	96	1, 33
	1800	365JP	**VJPFPM2551T**	11,154	PF3	34.50	565	94.1	230/460	87	1
100	3600	365JP	**VJPFPM2550T**	12,641	PF3	33.50	523	93	230/460	113	1
		365JP	**VJPFPM2550T-2/4**	12,641	PF3	33.50	523	93	200/400	130	1, 33

(a) See notes on inside back flap

Fire pump, three phase, ODP, footless, close-coupled pump

Hp	RPM	NEMA Frame	Catalog Number	List Price	Disc. Sym.	"C" Dim.	Aprx. Wt. (lb)	Full Load Efficiency	Voltage	Full Load Amps	Notes (a)
575 volt											
20	3600	254JP	**VJPFPM2514T-5**	3,663	PF3	27.66	145	90.2	575	18.5	
	1800	256JP	**VJPFPM2515T-5**	3,828	PF3	28.07	208	91.0	575	19.6	
25	3600	256JP	**VJPFPM2516T-5**	4,208	PF3	28.07	219	91.0	575	23	
	1800	284JP	**VJPFPM2531T-5**	4,694	PF3	31.44	322	92.4	575	23	
30	3600	284JP	**VJPFPM2534T-5**	4,983	PF3	29.23	266	91.0	575	28	
	1800	286JP	**VJPFPM2535T-5**	5,761	PF3	29.25	396	92.4	575	29	
40	3600	286JP	**VJPFPM2538T-5**	5,956	PF3	31.44	303	91.7	575	36	
	1800	324JP	**VJPFPM2539T-5**	6,928	PF3	31.13	530	93.0	575	39	
50	3600	324JP	**VJPFPM2542T-5**	7,422	PF3	31.13	396	92.4	575	46	
	1800	326JP	**VJPFPM2543T-5**	7,712	PF3	32.13	396	93.0	575	49	
60	3600	326JP	**VJPFPM2546T-5**	8,785	PF3	32.13	380	93.0	575	54	
	1800	364JP	**VJPFPM2547T-5**	9,554	PF3	32.50	475	93.6	575	57	
75	3600	364JP	**VJPFPM2549T-5**	11,848	PF3	32.50	648	93.0	575	67	
	1800	365JP	**VJPFPM2551T-5**	11,154	PF3	34.50	565	94.1	575	69	
100	3600	365JP	**VJPFPM2550T-5**	12,641	PF3	33.50	523	93.0	575	90	

(a) See notes on inside back flap.

Jet pump, single phase, TEFC

1/3 thru 2 Hp

IP44

Features:

- Automatic thermal overload protection
- Corrosion resistant stainless steel shaft extension
- Slotted opposite DE shaft for easy installation
- Superior switch design provides optimized torque profiles
- Dynamically balanced rotor to reduce noise and increase bearing life

Applications:

- Industrial pumps
- Swimming pool pumps
- General purpose pumps
- Commercial machinery
- Food and beverage
- Wastewater
- Agricultural

Hp	RPM	NEMA Frame	Catalog Number	List Price	Disc. Sym.	"C" Dim.	Aprx. Wt. (lb)	Full Load Efficiency	Voltage	Full Load Amps	Notes (a)
Foot mounted											
1/3	1800	56J	**CJL3501A**	749	PJ1	11.84	23	60	115/230	3	30
1/2	1800	56J	**CJL3504A**	883	PJ1	12.47	28	68	115/230	3.7	30
3/4	1800	56J	**CJL3507A**	1,075	PJ1	12.97	35	74	115/230	4.1	30
1	3600	56J	**CJL3509A**	1,088	PJ1	13.74	39	66	115/230	6	30
1 1/2	3600	56J	**CJL3513A**	1,195	PJ1	13.74	47	70	115/230	8.3	30
2	3600	56J	**CJL3515A**	1,405	PJ1	14.62	51	74	115/230	11.5	30
Footless											
1/3	3600	56J	**JL3405A**	555	PJ1	11.85	19	60	115/230	3	30
	1800	56J	**JL3501A**	693	PJ1	11.85	22	60	115/230	3	30
1/2	3600	56J	**JL3503A**	636	PJ1	12.85	26	62	115/230	3.7	30
	1800	56J	**JL3504A**	805	PJ1	12.85	27	68	115/230	3.7	30
3/4	3600	56J	**JL3506A**	757	PJ1	12.85	29	66	115/230	5.4	30
	1800	56J	**JL3507A**	955	PJ1	12.97	33	74	115/230	4.1	30
1	3600	56J	**JL3509A**	925	PJ1	13.74	42	66	115/230	6	30
	1800	56J	**JL3510A**	1,097	PJ1	13.74	40	67	115/230	6.2	30
1 1/2	3600	56J	**JL3513A**	1,097	PJ1	13.74	45	70	115/230	8.3	30
	1800	56J	**JL3514A**	1,202	PJ1	14.62	51	75.5	115/230	8	30
2	3600	56J	**JL3515A**	1,288	PJ1	14.62	54	74	115/230	11.5	30
	1800	56J	**JL3516A**	1,368	PJ1	14.62	52	78	115/230	8.6	20, 30

(a) See notes on inside back flap.
All threaded shaft, single phase motors are connected single rotation – CCW when viewing drive end.
All above ratings can be UL 1081 compliant through MOD Express®.
See M30A in the MOD Express program section of this catalog for more details.

Jet pump, single phase, ODP

1/3 thru 3 Hp

IP23

Features:

- Automatic thermal overload protection
- Corrosion resistant stainless steel shaft extension
- Slotted opposite DE shaft for easy installation
- Superior switch design provides optimized torque profiles
- Optimized airflow design providing higher horsepower in a smaller package

Applications:

- Industrial pumps
- Swimming pool pumps
- General purpose pumps
- Commercial machinery
- Food and beverage
- Wastewater
- Agricultural

Hp	RPM	NEMA Frame	Catalog Number	List Price	Disc. Sym.	"C" Dim.	Aprx. Wt. (lb)	Full Load Efficiency	Voltage	Full Load Amps	Notes (a)
Foot mounted											
1/3	3600	56J	**CJL1205A**	547	PJ1	11.91	23	58	115/230	3.1	
	1800	56J	**CJL1301A**	818	PJ1	11.89	23	60	115/208-230	3	30
1/2	3600	56J	**CJL1303A**	566	PJ1	12.51	30	66	115/230	3.7	
	1800	56J	**CJL1304A**	925	PJ1	12.14	25	62	115/230	4.2	30
3/4	3600	56J	**CJL1306A**	723	PJ1	13.39	30	69	115/230	5.5	
	1800	56J	**CJL1307A**	1,060	PJ1	12.25	35	63	115/230	5.4	
1	3600	56J	**CJL1309A**	741	PJ1	13.89	32	65	115/208-230	7	30
1 1/2	3600	56J	**CJL1313A**	1,028	PJ1	13.89	37	78.5	115/230	6.5	
2	3600	56J	**CJL1317A**	1,375	PJ1	13.25	45	70	115/230	13	30
Footless											
1/3	3600	56J	**JL1205A**	479	PJ1	11.89	25	58	115/230	3.1	
	1800	56J	**JL1301A**	552	PJ1	11.89	23	60	115/230	3	30
1/2	3600	56J	**JL1303A**	538	PJ1	12.51	26	66	115/230	3.7	
	1800	56J	**JL1304A**	649	PJ1	12.14	25	62	115/230	4.2	30
3/4	3600	56J	**JL1306A**	708	PJ1	13.39	33	69	115/230	5.5	
	1800	56J	**JL1307A**	818	PJ1	13.89	33	68	115/230	5.1	30
1	3600	56J	**JL1309A**	734	PJ1	13.89	32	65	115/230	7	30
1 1/2	3600	56J	**JL1313A**	1,024	PJ1	13.89	36	78.5	115/230	6.5	
2	3600	56J	**JL1317A**	1,263	PJ1	13.25	45	70	115/230	13	30
3	3600	56J	**JL1323A**	1,296	PJ1	14.13	52	82.5	230	13	30

(a) See notes on inside back flap.
All threaded shaft, single phase motors are connected single rotation - CCW when viewing drive end.
All above ratings can be UL 1081 compliant through MOD Express®.
See M30A in the MOD Express program section of this catalog for more details.

Jet pump, three phase, TEFC

1/3 thru 3 Hp

IP44

Features:

- Corrosion resistant stainless steel shaft extension
- Slotted opposite DE shaft for easy installation
- Dynamically balanced rotor to reduce noise and increase bearing life

Applications:

- Industrial pumps
- Swimming pool pumps
- General purpose pumps
- Commercial machinery
- Food and beverage
- Wastewater
- Agricultural

Hp	RPM	NEMA Frame	Catalog Number	List Price	Disc. Sym.	"C" Dim.	Aprx. Wt. (lb)	Full Load Efficiency	Voltage	Full Load Amps	Notes (a)
Footless											
1/3	3600	56J	**JM3457**	578	PJ3	11.84	19	62	230/460	0.8	30
	1800	56J	**JM3458**	626	PJ3	11.84	21	68	230/460	0.8	30
1/2	3600	56J	**JM3460**	626	PJ3	11.84	21	70	230/460	1.2	30
	1800	56J	**JM3461**	738	PJ3	11.84	23	74	230/460	1	30
3/4	3600	56J	**JM3463**	685	PJ3	11.84	23	74	208-230/460	1.5	
	1800	56J	**JM3542**	797	PJ3	11.84	26	75.5	208-230/460	1.5	
1	3600	56J	**EJM3545**	1,072	PJ3	12.47	27	77	230/460	1.6	30
	1800	56J	**EJM3546**	1,232	PJ3	13.74	37	85.5	230/460	1.7	30
1 1/2	3600	56J	**EJM3550**	1,212	PJ3	12.72	38	84	230/460	1.9	30
	1800	56J	**EJM3554**	1,367	PJ3	13.74	41	86.5	230/460	2.3	1, 30
2	3600	56J	**EJM3555**	1,326	PJ3	13.74	41	85.5	230/460	2.5	30
	1800	56J	**EJM3558**	1,444	PJ3	14.62	48	86.5	230/460	2.9	1, 30
3	3600	56J	**EJM3559**	1,451	PJ3	14.62	50	86.5	230/460	3.6	1, 30
Foot mounted											
1/2	1800	56J	**CJM3538**	782	PJ3	11.84	23	74	230/460	1	30
3/4	1800	56J	**CJM3542**	828	PJ3	11.84	25	75.5	208-230/460	1.5	
575 volts											
1/2	3600	56J	**JM3460-5**	626	PJ3	11.84	21	68	575	1	
3/4	3600	56J	**JM3463-5**	685	PJ3	11.84	23	74	575	1.2	
1	3600	56J	**EJM3545-5**	1,072	PJ3	12.47	27	77	575	1.2	
2	3600	56J	**EJM3555-5**	1,326	PJ3	13.74	41	85.5	575	2	
3	3600	56J	**EJM3559-5**	1,451	PJ3	14.62	50	86.5	575	2.9	

(a) See notes on inside back flap.

All above ratings can be UL 1081 compliant through MOD Express®.
See M30A in the MOD Express program section of this catalog for more details.

Jet pump, three phase, ODP

1/3 thru 3 Hp

IP23

Features:

- Corrosion resistant stainless steel shaft extension
- Slotted opposite DE shaft for easy installation
- Dynamically balanced rotor to reduce noise and increase bearing life
- Optimized airflow design providing higher horsepower in a smaller package

Applications:

- Industrial pumps
- Swimming pool pumps
- General purpose pumps
- Commercial machinery
- Food and beverage
- Wastewater
- Agricultural

Hp	RPM	NEMA Frame	Catalog Number	List Price	Disc. Sym.	"C" Dim.	Aprx. Wt. (lb)	Full Load Efficiency	Voltage	Full Load Amps	Notes (a)
Footless											
1/3	3600	56J	**JM3006**	527	PJ3	11.72	19	62	230/460	0.8	30
1/2	3600	56J	**JM3107**	557	PJ3	11.72	21	70	230/460	1.2	30
	1800	56J	**JM3108**	665	PJ3	11.85	23	74	230/460	1	30
3/4	3600	56J	**JM3111**	660	PJ3	11.72	23	74	208-230/460	1.5	
	1800	56J	**JM3112**	734	PJ3	12.34	27	75.5	208-230/460	1.5	
1	3600	56J	**JM3115**	734	PJ3	12.34	32	77	230/460	1.6	30
	1800	56J	**JM3116**	805	PJ3	13.22	30	78.5	208-230/460	1.7	1
1 1/2	3600	56J	**JM3120**	876	PJ3	13.22	30	74	230/460	2.2	30
	1800	56J	**JM3154**	958	PJ3	13.72	34	77	208-230/460	2.8	
2	3600	56J	**JM3155**	1,041	PJ3	13.72	35	82.5	230/460	2.7	30
3	3600	56J	**JM3158**	1,235	PJ3	13.72	42	80	208-230/460	4	
Foot mounted											
1/3	1800	56J	**CJM3104**	631	PJ3	11.85	22	68	230/460	0.8	30
1/2	3600	56J	**CJM3107**	578	PJ3	11.72	22	70	230/460	1.2	30
	1800	56J	**CJM3108**	705	PJ3	11.72	24	74	230/460	1	30
3/4	3600	56J	**CJM3111**	660	PJ3	11.72	28	74	208-230/460	1.5	
	1800	56J	**CJM3112**	756	PJ3	12.34	27	75.5	208-230/460	1.5	
1	3600	56J	**CJM3115**	738	PJ3	12.34	29	77	230/460	1.6	30
1 1/2	3600	56J	**CJM3120**	899	PJ3	13.22	31	81.5	230/460	2	30
2	3600	56J	**CJM3155**	1,069	PJ3	13.72	34	82.5	230/460	2.7	30
3	3600	56J	**CJM3158**	1,265	PJ3	13.74	41	80	208-230/460	4	

(a) See notes on inside back flap.

All above ratings can be UL 1081 compliant through MOD Express®.

See M30A in the MOD Express program section of this catalog for more details.

Jet pump, three phase, TEFC, C-Face

3/4 thru 3 Hp

IP55

Features:

- 300 series stainless steel hardware and shaft extension
- Footless
- Neoprene gaskets
- Double sealed ball bearings
- Lip and V-Ring seal on DE
- White epoxy, corrosion resistant finish
- Easy removable drain plugs

Applications:

- Food processing
- Wet environment
- Pumps and wastewater

Hp	RPM	NEMA Frame	Catalog Number	List Price	Disc. Sym.	"C" Dim.	Aprx. Wt. (lb)	Full Load Efficiency	Voltage	Full Load Amps	Notes (a)
Footless											
3/4	3600	56J	**JWDM3463**	1,097	WDW	12.72	33	68	208-230/460	1.4	1, 30
1	3600	56J	**JEWDM3545**	1,732	WDW	12.72	38	78.5	208-230/460	1.6	1, 30
1 1/2	3600	56J	**JEWDM3550**	1,829	WDW	13.72	41	84	208-230/460	2	1, 30
2	3600	56J	**JEWDM3555**	2,032	WDW	13.72	41	85.5	230/460	2.5	1, 30
3	3600	56J	**JEWDM3559**	2,409	WDW	15.97	64	87.5	208-230/460	3.5	1, 30
Foot mounted											
3/4	3600	56J	**CJWDM3463**	1,105	WDW	12.72	33	68	208-230/460	1.4	1, 30
1	3600	56J	**CJEWDM3545**	1,741	WDW	12.72	38	78.5	208-230/460	1.6	1, 30
1 1/2	3600	56J	**CJEWDM3550**	1,839	WDW	13.72	41	84	208-230/460	2	1, 30
2	3600	56J	**CJEWDM3555**	2,040	WDW	13.72	41	85.5	230/460	2.5	1, 30
3	3600	56J	**CJEWDM3559**	2,417	WDW	15.98	64	87.5	208-230/460	3.5	1, 30

(a) See notes on inside back flap.

Square flange pump, ODP

1/2 thru 2 Hp

IP23

Features:

- Corrosion resistant stainless steel shaft extension
- Dynamically balanced rotor to reduce noise and increase bearing life
- Heavy gauge steel design
- Safeguard drip cover

Applications:

- Square flange pumps
- Swimming pool pumps
- General purpose pumps
- Commercial machinery
- Food and beverage
- Wastewater
- Agricultural

Hp	RPM	NEMA Frame	Catalog Number	List Price	Disc. Sym.	"C" Dim.	Aprx. Wt. (lb)	Full Load Efficiency	Voltage	Full Load Amps	Notes (a)
Single phase											
1/2	3600	56Y	**JSL325A**	619	PJ1	11.35	24	70	115/230	3.3	30
3/4	3600	56Y	**JSL425A**	657	PJ1	11.97	26	62	115/230	5.1	30
1	3600	56Y	**JSL525A**	701	PJ1	12.72	30	70	115/230	6.3	30
1 1/2	3600	56YZ	**JSL625A**	955	PJ1	14.44	42	72	115/230	9	30
2	3600	56YZ	**JSL725A**	958	PJ1	14.44	47	74	115/230	11	30
Three phase											
1/2	3600	56YZ	**JSM3107**	557	PJ3	11.40	21	70	230/460	1.2	30
3/4	3600	56YZ	**JSM3111**	659	PJ3	11.40	24	74	208-230/460	1.5	
1	3600	56YZ	**JSM3115**	729	PJ3	12.02	27	77	230/460	1.6	30
1 1/2	3600	56YZ	**JSM3120**	869	PJ3	12.77	31	81.5	230/460	2	30
2	3600	56YZ	**JSM3155**	1,029	PJ3	13.40	35	82.5	230/460	2.7	30

(a) See notes on inside back flap.

Close-coupled pump, single phase

3 thru 10 Hp

TEFC IP44 | ODP IP23

Features:

- Oversize ball bearings for the pump industry
- Locked DE bearing to allow mounting in any configuration**
- Dynamically balanced rotor to reduce noise and increase bearing life
- Superior switch design provides optimized torque profiles

Applications:

- Industrial pumps
- General purpose pumps
- Food and beverage
- Wastewater
- Agricultural
- Aggregate
- Cement

Hp	RPM	NEMA Frame	Catalog Number	List Price	Disc. Sym.	"C" Dim.	Aprx. Wt. (lb)	Full Load Efficiency	Voltage	Full Load Amps	Notes (a)
Totally enclosed fan cooled, mechanical seal, Type JM											
3	3600	182JM	**JML3606T**	1,833	PC1	18.06	79	76	115/230	14.5	1, 30
5	3600	184JM	**JML3608T**	2,442	PC1	19.55	93	83	230	19.5	2, 20
Open drip proof, mechanical seal, Type JM											
3	3600	182JM	**JML1406T**	1,749	PC1	16.50	69	78	115/208-230	14	
	1800	184JM	**JML1408T**	2,004	PC1	16.50	80	78	115/230	16	30
5	3600	184JM	**JML1409T**	2,468	PC1	16.50	81	80	230	21.5	1, 30
	1800	213JM	**JML1508T**	2,844	PC1	18.19	115	77	230	27	
7 1/2	3600	213JM	**JML1509T**	3,540	PC1	18.19	116	81	230	37	30
	1800	215JM	**JML1510T**	3,745	PC1	19.31	142	85.5	230	31	30
10	3600	215JM	**JML1511T**	4,354	PC1	19.31	141	83	230	46	20, 30
	1800	215JM	**JML1512T**	4,635	PC1	20.95	150	84	230	41	20, 30
Open drip proof, packed pump, Type JP											
3	3600	182JP	**JPL1406T**	1,749	PC1	19.57	76	78	115/230	14	30
	1800	184JP	**JPL1408T**	2,004	PC1	19.57	87	78	115/230	16	30
5	3600	184JP	**JPL1409T**	2,468	PC1	19.57	88	80	230	21.5	1, 30
	1800	213JP	**JPL1508T**	2,844	PC1	22.07	117	77	230	27	
7 1/2	3600	213JP	**JPL1509T**	3,540	PC1	22.07	121	81	230	37	30
	1800	215JP	**JPL1510T**	3,745	PC1	23.19	143	85.5	230	31	30
10	3600	215JP	**JPL1511T**	4,354	PC1	23.19	148	83	230	46	20, 30
	1800	215JP	**JPL1512T**	4,635	PC1	20.95	142	84	230	41	20, 30
Open drip proof, west coast fit, Type TCZ											
3	3600	182TCZ	**WCL1406T**	1,760	PC1	19.69	81	78	115/230	14	30
	1800	184TCZ	**WCL1408T**	2,019	PC1	19.69	91	78	115/230	16	30
5	3600	184TCZ	**WCL1409T**	2,491	PC1	19.69	91	75	230	23	1, 30
	1800	213TCZ	**WCL1508T**	2,868	PC1	21.25	116	77	230	27	
7 1/2	3600	213TCZ	**WCL1509T**	3,563	PC1	21.25	117	81	230	37	30
10	3600	215TCZ	**WCL1511T**	4,395	PC1	22.38	143	83	230	46	20, 30

(a) See notes on inside back flap.
**ODP motors retain IP rating when mounted in horizontal position only.

Close-coupled pump, three phase, foot mounted, with internal AEGIS® Bearing Protection Ring

1 thru 50 hp

AEGIS INSTALLED

TEFC IP44

ODP IP23

Features:

- Internal grounding brush for bearing current mitigation on DE retainer ring
- Class H insulation for increased protection on Inverter use
- Oversize ball bearings for the pump industry
- Locked DE bearing to allow mounting in any configuration**
- Designed for longevity with a 3 year warranty on premium efficient Super-E® motors
- Suitable for Inverter use per NEMA MG1 Part 31.4.4.2

Applications:

- Commercial pumps
- Pairing with a speed drive
- General purpose pumps
- Industrial pumps
- Food and beverage
- Agricultural

Hp	RPM	NEMA Frame	Catalog Number	List Price	Disc. Sym.	"C" Dim.	Aprx. Wt. (lb)	Full Load Efficiency	Voltage	Full Load Amps	Notes (a)
Totally enclosed fan cooled											
1	1800	143JM	**EJMM3546T-G**	1,518	PC3	15.41	37	85.5	230/460	1.5	30
1 1/2	3600	143JM	**EJMM3550T-G**	1,510	PC3	15.41	38	86.5	230/460	1.9	30
	1800	143JM	**EJMM3554T-G**	1,755	PC3	15.41	41	84	230/460	2.2	30
2	3600	145JM	**EJMM3555T-G**	1,714	PC3	15.41	41	85.5	230/460	2.5	30
	1800	145JM	**EJMM3558T-G**	1,833	PC3	15.41	45	86.5	230/460	2.9	30
3	3600	182JM	**EJMM3610T-G**	1,905	PC3	16.91	60	86.5	230/460	3.6	30
	1800	182JM	**EJMM3611T-G**	2,062	PC3	18.06	76	89.5	230/460	4.2	30
5	3600	184JM	**EJMM3613T-G**	2,195	PC3	18.06	81	88.5	230/460	5.9	30
	1800	184JM	**EJMM3615T-G**	2,067	PC3	19.56	93	89.5	230/460	6.7	30
7 1/2	3600	213JM	**EJMM3709T-G**	2,857	PC3	19.76	124	89.5	230/460	9	30
	1800	213JM	**EJMM3710T-G**	3,053	PC3	20.89	134	91.7	230/460	9.4	30
10	3600	215JM	**EJMM3711T-G**	3,216	PC3	19.76	124	90.2	230/460	11.8	30
	1800	215JM	**EJMM3714T-G**	3,512	PC3	22.38	165	91.7	230/460	12	30
15	3600	254JM	**EJMM2394T-G**	5,572	PC3	25.30	260	91	230/460	17.5	30
	1800	254JM	**EJMM2333T-G**	5,528	PC3	25.30	265	92.4	230/460	18.1	30
20	3600	256JM	**EJMM4106T-G**	6,088	PC3	25.30	274	91	230/460	23	30
	1800	256JM	**EJMM2334T-G**	6,175	PC3	25.30	308	93	230/460	24	30
25	3600	284JM	**EJMM4107T-G**	7,161	PC3	26.96	265	91.7	230/460	29	30
	1800	284JM	**EJMM4103T-G**	6,928	PC3	26.96	437	93.6	230/460	31	30
30	3600	286JM	**EJMM4108T-G**	9,956	PC3	26.96	299	91.7	230/460	34	30
	1800	286JM	**EJMM4104T-G**	9,371	PC3	28.64	437	93.6	230/460	38	30
40	3600	324JM	**EJMM4109T-G**	10,557	PC3	30.64	470	92.4	230/460	45	30
	1800	324JM	**EJMM4110T-G**	11,489	PC3	30.64	578	94.1	230/460	48	30
50	3600	326JM	**EJMM4114T-G**	12,734	PC3	30.65	575	93	230/460	56	30
	1800	326JM	**EJMM4115T-G**	12,905	PC3	30.65	700	94.5	230/460	58	30

(a) See notes on inside back flap.

Cast iron frame

**ODP motors retain IP rating when mounted in horizontal position only.

Red catalog number indicates **NEW** product.

Close-coupled pump, three phase, foot mounted, with internal AEGIS® Bearing Protection Ring

Hp	RPM	NEMA Frame	Catalog Number	List Price	Disc. Sym.	"C" Dim.	Aprx. Wt. (lb)	Full Load Efficiency	Voltage	Full Load Amps	Notes (a)
Open drip proof											
1	1800	143JM	**EJMM3116T-G**	1,438	PC3	13.75	37	85.5	230/460	1.5	30
1 1/2	1800	145JM	**EJMM3154T-G**	1,533	PC3	13.75	41	86.5	230/460	2.2	30
2	1800	145JM	**EJMM3157T-G**	1,652	PC3	14.25	44	86.5	230/460	2.9	30
3	3600	145JM	**EJMM3158T-G**	1,838	PC3	15.13	51	85.5	230/460	3.8	30
	1800	182JM	**EJMM3211T-G**	1,867	PC3	16.50	74	89.5	230/460	4.2	30
5	3600	182JM	**EJMM3212T-G**	2,207	PC3	15.12	64	86.5	230/460	6	30
	1800	184JM	**EJMM3218T-G**	2,067	PC3	18.00	88	89.5	230/460	6.6	30
7 1/2	3600	184JM	**EJMM3219T-G**	2,546	PC3	16.50	78	88.5	230/460	8.6	30
	1800	213JM	**EJMM3311T-G**	3,015	PC3	18.19	120	91	230/460	9.7	30
10	3600	213JM	**EJMM3312T-G**	3,267	PC3	18.19	121	89.5	230/460	12	30
	1800	215JM	**EJMM3313T-G**	3,226	PC3	19.31	132	91.7	230/460	12.5	30
15	3600	215JM	**EJMM3314T-G**	4,082	PC3	18.19	134	90.2	230/460	17.5	30
	1800	254JM	**EJMM2513T-G**	4,617	PC3	23.19	213	93	230/460	17.7	30
20	3600	254JM	**EJMM2514T-G**	5,014	PC3	23.19	185	91	230/460	23.5	30
	1800	256JM	**EJMM2515T-G**	5,368	PC3	24.69	255	93	230/460	24	30
25	3600	256JM	**EJMM2516T-G**	6,340	PC3	23.19	233	91.7	230/460	28	30
	1800	284JM	**EJMM2531T-G**	6,518	PC3	25.94	377	93.6	230/460	30	30
30	3600	284JM	**EJMM2534T-G**	7,430	PC3	24.69	320	91.7	230/460	35	30
	1800	286JM	**EJMM2535T-G**	7,525	PC3	26.94	378	94.1	230/460	36	30
40	3600	286JM	**EJMM2538T-G**	9,045	PC3	24.69	330	92.4	230/460	46	30
	1800	324JM	**EJMM2539T-G**	9,584	PC3	27.44	378	94.1	230/460	49	30
50	3600	324JM	**EJMM2542T-G**	10,012	PC3	27.44	375	93	230/460	56	30
	1800	326JM	**EJMM2543T-G**	10,353	PC3	27.94	497	94.5	230/460	57	30

(a) See notes on inside back flap.
**ODP motors retain IP rating when mounted in horizontal position only.
Red catalog number indicates **NEW** product.

Close-coupled pump, three phase, TEFC

1 thru 50 Hp

IP44

Features:

- Oversize ball bearings for the pump industry
- Locked DE bearing to allow mounting in any configuration
- Designed for longevity with a 3 year warranty on premium efficient Super-E® motors
- Suitable for Inverter use per NEMA MG1 Part 31.4.4.2

Applications:

- General purpose pumps
- Industrial applications
- Commercial pumps
- Food and beverage
- Wastewater
- Agricultural
- Aggregate

Hp	RPM	NEMA Frame	Catalog Number	List Price	Disc. Sym.	"C" Dim.	Aprx. Wt. (lb)	Full Load Efficiency	Voltage	Full Load Amps	Notes (a)
230/460 volts											
1	1800	143JM	**EJMM3546T**	1,362	PC3	15.43	40	85.5	230/460	1.5	1, 30
1 1/2	3600	143JM	**EJMM3550T**	1,354	PC3	15.43	47	84	230/460	1.9	1, 30
	1800	145JM	**EJMM3554T**	1,451	PC3	15.43	44	86.5	230/460	2.2	1, 30
		145JP	**EJPM3554T**	1,599	PC3	18.50	41	86.5	230/460	2.2	1, 30
2	3600	145JM	**EJMM3555T**	1,558	PC3	15.43	47	85.5	230/460	2.5	1, 30
		145JP	**EJPM3555T**	1,558	PC3	18.49	41	85.5	230/460	2.5	1, 30
	1800	145JM	**EJMM3558T**	1,755	PC3	15.43	50	86.5	230/460	2.9	1, 30
		145JP	**EJPM3558T**	1,676	PC3	19.37	48	86.5	230/460	2.9	1, 30
3	3600	145JM	**EJMM3559T**	1,683	PC3	16.31	54	86.5	230/460	3.6	1, 30
		145JP	**EJPM3559T**	1,683	PC3	19.37	50	86.5	230/460	3.6	1, 30
		182JM	**EJMM3610T**	1,992	PC3	16.81	56	86.5	230/460	3.6	1, 30
		182JP	**EJPM3610T**	1,874	PC3	19.87	50	86.5	230/460	3.6	1, 30
	1800	182JM	**EJMM3611T**	1,887	PC3	18.06	76	89.5	230/460	4.2	1, 30
		182JP	**EJPM3611T**	1,887	PC3	21.11	70	89.5	230/460	4.2	1, 30
5	3600	184JM	**EJMM3613T**	2,032	PC3	18.06	79	88.5	230/460	5.9	1, 30
		184JP	**EJPM3613T**	2,032	PC3	21.11	81	88.5	230/460	5.6	1, 30
	1800	184JM	**EJMM3615T**	1,724	PC3	19.56	93	89.5	230/460	6.7	1, 30
		184JP	**EJPM3615T**	1,935	PC3	22.61	96	89.5	230/460	6.9	1, 30
7 1/2	3600	184JM	**EJMM3616T**	2,292	PC3	19.56	101	89.5	230/460	8.4	1, 30
		184JP	**EJPM3616T**	2,546	PC3	22.61	96	89.5	230/460	9.7	1, 30
		213JM	**EJMM3709T**	2,427	PC3	19.76	125	89.5	230/460	9	1, 30
		213JP	**EJPM3709T**	2,962	PC3	23.64	121	89.5	230/460	9	1, 30
		213TCZ	**EWCM3709T**	2,905	PC3	23.45	96	89.5	230/460	9.7	1, 30
	1800	213JM	**EJMM3710T**	2,733	PC3	20.88	134	91.7	230/460	9.4	1, 30
		213JP	**EJPM3710T**	2,733	PC3	24.79	129	91.7	230/460	10.7	1, 30
		213TCZ	**EWCM3710T**	2,676	PC3	23.95	129	91.7	230/460	10.7	1, 30
10	3600	215JM	**EJMM3711T**	2,995	PC3	19.76	130	90.2	230/460	11.8	1, 30
		215JP	**EJPM3711T**	2,995	PC3	23.64	118	90.2	230/460	11.8	1, 30
		215TCZ	**EWCM3711T**	2,938	PC3	22.82	118	90.2	230/460	11.8	1, 30
	1800	215JM	**EJMM3714T**	3,083	PC3	22.39	165	91.7	230/460	12	1, 30
		215JP	**EJPM3714T**	3,083	PC3	26.29	165	91.7	230/460	12	1, 30
		215TCZ	**EWCM3714T**	2,957	PC3	25.45	187	91.7	230/460	12.6	1, 30
15	3600	215JM	**EJMM3713T**	4,197	PC3	22.39	169	91	230/460	17	1, 30
		215JP	**EJPM3713T**	4,000	PC3	26.29	169	91	230/460	17	1, 30
		215TCZ	**EWCM3713T**	3,942	PC3	25.45	169	91	230/460	17	1, 30
		254JM	**EJMM2394T**	5,325	PC3	25.30	257	91	230/460	17.5	1, 30
		254JP	**EJPM2394T**	5,325	PC3	28.16	260	91	230/460	17.8	1, 30
	1800	254JM	**EJMM2333T**	5,045	PC3	25.30	265	92.4	230/460	18.5	1, 30
		254JP	**EJPM2333T**	5,045	PC3	28.16	265	92.4	230/460	18.5	1, 30

(a) See notes on inside back flap.

Cast iron frame

Close-coupled pump, three phase, TEFC

Hp	RPM	NEMA Frame	Catalog Number	List Price	Disc. Sym.	"C" Dim.	Aprx. Wt. (lb)	Full Load Efficiency	Voltage	Full Load Amps	Notes (a)
230/460 volts (continued)											
20	3600	256JM	**EJMM4106T**	5,730	PC3	25.30	281	91	230/460	23	1, 30
		256JP	**EJPM4106T**	5,730	PC3	28.16	264	91	230/460	23	1, 30
	1800	256JM	**EJMM2334T**	5,780	PC3	25.30	304	93	230/460	24	1, 30
		256JP	**EJPM2334T**	5,780	PC3	28.16	300	93	230/460	24	1, 30
25	3600	284JM	**EJMM4107T**	6,513	PC3	26.96	353	91.7	230/460	29	20, 30
		284JP	**EJPM4107T**	6,513	PC3	29.84	349	91.7	230/460	29	20, 30
	1800	284JM	**EJMM4103T**	6,746	PC3	28.64	387	93.6	230/460	30	1, 30
		284JP	**EJPM4103T**	6,746	PC3	31.51	412	93.6	230/460	30	1, 30
30	3600	286JM	**EJMM4108T**	8,956	PC3	28.64	406	91.7	230/460	33	1, 30
		286JP	**EJPM4108T**	8,956	PC3	31.51	405	91.7	230/460	35	1, 30
	1800	286JM	**EJMM4104T**	9,541	PC3	28.64	422	93.6	230/460	36	1, 30
		286JP	**EJPM4104T**	9,541	PC3	31.51	452	93.6	230/460	36	1, 30
40	3600	324JM	**EJMM4109T**	10,142	PC3	30.64	487	92.4	230/460	45	1, 30
		324JP	**EJPM4109T**	10,142	PC3	33.51	498	92.4	230/460	45	1, 30
	1800	324JM	**EJMM4110T**	11,074	PC3	30.65	586	94.1	230/460	48	1, 30
		324JP	**EJPM4110T**	11,074	PC3	33.41	602	94.1	230/460	48	1, 30
50	3600	326JM	**EJMM4114T**	12,319	PC3	30.65	595	93	230/460	56	1, 30
		326JP	**EJPM4114T**	12,319	PC3	33.41	604	93	230/460	56	1, 30
	1800	326JM	**EJMM4115T**	12,490	PC3	30.65	624	94.5	230/460	58	1, 30
		326JP	**EJPM4115T**	12,490	PC3	33.41	646	94.5	230/460	58	1, 30
575 volts											
1	1800	143JM	**EJMM3546T-5**	1,464	PC3	15.43	38	85.5	575	1.2	1
1 1/2	3600	143JM	**EJMM3550T-5**	1,444	PC3	15.41	38	84	575	1.5	
	1800	145JM	**EJMM3554T-5**	1,599	PC3	15.43	41	86.5	575	1.8	1
2	3600	145JM	**EJMM3555T-5**	1,558	PC3	15.41	41	85.5	575	2	
	1800	145JM	**EJMM3558T-5**	1,676	PC3	15.43	45	86.5	575	2.3	1
3	3600	145JM	**EJMM3559T-5**	1,683	PC3	16.29	50	86.5	575	2.9	1
		182JM	**EJMM3610T-5**	1,874	PC3	16.69	63	86.5	575	2.9	
	1800	182JM	**EJMM3611T-5**	1,887	PC3	18.06	70	89.5	575	3.3	1
5	3600	184JM	**EJMM3613T-5**	2,032	PC3	18.06	74	88.5	575	4.7	1
	1800	184JM	**EJMM3615T-5**	1,935	PC3	19.56	93	89.5	575	5.3	1
7 1/2	3600	184JM	**EJMM3616T-5**	2,546	PC3	19.56	96	89.5	575	6.8	1
	1800	213JM	**EJMM3710T-5**	2,733	PC3	20.88	127	91.7	575	7.6	1, 35
10	3600	215JM	**EJMM3711T-5**	2,995	PC3	19.76	118	90.2	575	9.5	20
	1800	215JM	**EJMM3714T-5**	3,015	PC3	22.38	165	91.7	575	9.6	1,35
15	3600	215JM	**EJMM3713T-5**	4,000	PC3	22.38	169	91	575	13.4	1
		254JM	**EJMM2394T-5**	5,325	PC3	23.07	225	91	575	13.5	1, 35
	1800	254JM	**EJMM2333T-5**	4,973	PC3	25.30	268	92.4	575	14.6	1, 35

(a) See notes on inside back flap.
Cast iron frame

Close-coupled pump, three phase, TEFC, footless

1 thru 20 Hp

IP44

Features:

- Oversize ball bearings for the pump industry
- Locked DE bearing to allow mounting in any configuration
- Designed for longevity with a 3 year warranty on premium efficient Super-E® motors
- Suitable for Inverter use per NEMA MG1 Part 31.4.4.2

Applications:

- General purpose pumps
- Industrial applications
- Commercial pumps
- Food and beverage
- Wastewater
- Agricultural
- Aggregate

Hp	RPM	NEMA Frame	Catalog Number	List Price	Disc. Sym.	"C" Dim.	Aprx. Wt. (lb)	Full Load Efficiency	Voltage	Full Load Amps	Notes (a)
230/460 volts											
1	1800	143JM	**VEJMM3546T**	1,138	PC3	14.43	38	85.5	230/460	1.5	1, 30
1 1/2	1800	145JM	**VEJMM3554T**	1,200	PC3	15.43	45	86.5	230/460	2.2	1, 30
2	1800	145JM	**VEJMM3558T**	1,438	PC3	15.43	44	86.5	230/460	2.9	1, 30
3	1800	182JM	**VEJMM3611T**	1,640	PC3	18.05	74	89.5	230/460	4.2	1, 30
5	1800	184JM	**VEJMM3615T**	1,935	PC3	19.55	90	89.5	230/460	6.7	1, 30
	3600	213JM	**VEJMM3709T**	2,962	PC3	19.76	121	89.5	230/460	9	1, 30
7 1/2	1800	213JM	**VEJMM3710T**	2,770	PC3	20.92	136	91.7	230/460	9.4	1, 30
10	1800	215JM	**VEJMM3714T**	3,208	PC3	22.40	165	91.7	230/460	12	1, 30
15	1800	254JM	**VEJMM2333T**	5,429	PC3	25.28	278	92.4	230/460	18.1	1, 30
20	1800	256JM	**VEJMM2334T**	5,780	PC3	25.28	303	93	230/460	24	1, 30
575 volts											
1	1800	143JM	**VEJMM3546T-5**	1,464	PC3	15.43	38	86.5	575	1.1	1
1 1/2	1800	145JM	**VEJMM3554T-5**	1,599	PC3	16.31	41	86.5	575	1.6	1
2	1800	145JM	**VEJMM3558T-5**	1,676	PC3	15.43	45	86.5	575	2.2	1
3	1800	182JM	**VEJMM3611T-5**	1,887	PC3	18.05	70	89.5	575	3.1	1
5	1800	184JM	**VEJMM3615T-5**	1,935	PC3	19.55	93	89.5	575	5.3	1
7 1/2	1800	213JM	**VEJMM3710T-5**	2,733	PC3	20.92	127	91.7	575	7.6	1, 35
10	1800	215JM	**VEJMM3714T-5**	3,015	PC3	22.42	165	91.7	575	9.6	1, 35
15	1800	254JM	**VEJMM2333T-5**	4,973	PC3	25.28	255	92.4	575	14.6	1, 35
20	1800	256JM	**VEJMM2334T-5**	5,780	PC3	25.28	303	93	575	19.2	1, 35

(a) See notes on inside back flap.

Cast iron frame

Close-coupled pump, three phase, ODP

1 thru 75 Hp

IP23

Features:

- Rodent screens to protect against trash debris
- Oversize ball bearings for the pump industry
- Locked DE bearing to allow mounting in any configuration**
- Designed for longevity with a 3 year warranty on premium efficient Super-E® Motors
- Suitable for Inverter use per NEMA MG1 Part 31.4.4.2

Applications:

- General purpose pumps
- Industrial applications
- Commercial pumps
- Food and beverage
- Wastewater
- Agricultural
- Aggregate

Hp	RPM	NEMA Frame	Catalog Number	List Price	Disc. Sym.	"C" Dim.	Aprx. Wt. (lb)	Full Load Efficiency	Voltage	Full Load Amps	Notes (a)
Foot mounted, 230/460											
1	1800	143JM	**EJMM3116T**	1,164	PC3	13.75	38	85.5	230/460	1.5	1, 30
		143JP	**EJPM3116T**	1,419	PC3	16.81	38	85.5	230/460	1.5	1, 30
1 1/2	3600	143JM	**EJMM3120T**	1,256	PC3	13.75	34	84	230/460	2	1, 30
	1800	145JM	**EJMM3154T**	1,260	PC3	13.75	38	86.5	230/460	2.2	1, 30
		145JP	**EJPM3154T**	1,472	PC3	16.81	37	86.5	230/460	2.2	1, 30
2	3600	145JM	**EJMM3155T**	1,431	PC3	13.75	44	85.5	230/460	2.5	1, 30
	1800	145JM	**EJMM3157T**	1,378	PC3	14.25	44	86.5	230/460	2.9	1, 30
		145JP	**EJPM3157T**	1,559	PC3	17.31	43	86.5	230/460	2.9	1, 30
3	3600	145JM	**EJMM3158T**	1,564	PC3	15.13	49	85.5	230/460	3.8	1, 30
		145JP	**EJPM3158T**	1,446	PC3	17.31	48	85.5	230/460	3.8	1, 30
	1800	182JM	**EJMM3211T**	1,525	PC3	16.50	72	89.5	230/460	4.2	1, 30
		182JP	**EJPM3211T**	1,834	PC3	19.56	74	89.5	230/460	4.2	1, 30
5	3600	182JM	**EJMM3212T**	1,864	PC3	15.12	64	86.5	230/460	6	1, 30
		182JP	**EJPM3212T**	1,729	PC3	18.18	63	86.5	230/460	6	1, 30
		182TCZ	**EWCM3212T**	1,691	PC3	18.32	63	86.5	230/460	6	1, 30
	1800	184JM	**EJMM3218T**	1,724	PC3	18.00	87	89.5	230/460	6.6	1, 30
		184JP	**EJPM3218T**	1,969	PC3	21.06	92	89.5	230/460	6.6	1, 30
	1200	215JM	**EJMM3309T**	2,939	PC3	19.31	141	89.5	230/460	7.4	1, 30
7 1/2	3600	184JM	**EJMM3219T**	2,203	PC3	16.50	78	88.5	230/460	8.6	1, 30
		184JP	**EJPM3219T**	2,495	PC3	19.56	77	88.5	230/460	8.6	1, 30
		184TCZ	**EWCM3219T**	2,457	PC3	19.69	77	88.5	230/460	8.6	1, 30
	1800	213JM	**EJMM3311T**	2,824	PC3	18.19	120	91	230/460	9.7	1, 30
		213JP	**EJPM3311T**	2,824	PC3	20.94	130	91	230/460	9.3	1, 30
	1200	254JM	**EJMM2506T**	4,039	PC3	24.69	248	90.2	230/460	11	1, 30
10	3600	213JM	**EJMM3312T**	2,921	PC3	18.19	120	89.5	230/460	12	1, 30
		213JP	**EJPM3312T**	2,921	PC3	22.07	122	89.5	230/460	12	1, 30
		213TCZ	**EWCM3312T**	2,864	PC3	21.25	121	89.5	230/460	12	1, 30
	1800	215JM	**EJMM3313T**	2,796	PC3	19.31	136	91.7	230/460	12.5	1, 30
		215JP	**EJPM3313T**	2,796	PC3	23.20	138	91.7	230/460	12.5	1, 30
	1200	256JM	**EJMM2511T**	4,902	PC3	24.69	255	91.7	230/460	14.3	1, 30
15	3600	215JM	**EJMM3314T**	3,917	PC3	18.19	131	90.2	230/460	17.5	1, 30
		215JP	**EJPM3314T**	3,917	PC3	22.07	134	90.2	230/460	17.5	1, 30
		215TCZ	**EWCM3314T**	3,860	PC3	21.25	131	90.2	230/460	17.5	1, 30
	1800	254JM	**EJMM2513T**	4,135	PC3	23.19	214	93	230/460	17.7	1, 30
		254JP	**EJPM2513T**	4,135	PC3	26.06	219	93	230/460	17.7	1, 30
	1200	284JM	**EJMM2524T**	6,434	PC3	24.69	300	91.7	230/460	20.5	1, 30
20	3600	254JM	**EJMM2514T**	4,599	PC3	23.19	195	91	230/460	23.5	1, 30
		254JP	**EJPM2514T**	4,599	PC3	26.06	220	91	230/460	23.5	1, 30
	1800	256JM	**EJMM2515T**	4,953	PC3	23.19	248	93	230/460	23.5	1, 30
		256JP	**EJPM2515T**	4,953	PC3	26.06	236	93	230/460	23.5	1, 30

(a) See notes on inside back flap.
**ODP motors retain IP rating when mounted in horizontal position only.

Close-coupled pump, three phase, ODP

Hp	RPM	NEMA Frame	Catalog Number	List Price	Disc. Sym.	"C" Dim.	Aprx. Wt. (lb)	Full Load Efficiency	Voltage	Full Load Amps	Notes (a)
Foot mounted, 230/460 (continued)											
25	3600	256JM	**EJMM2516T**	5,925	PC3	23.19	219	91.7	230/460	28	1, 30
		256JP	**EJPM2516T**	5,925	PC3	26.06	230	91.7	230/460	28	1, 30
	1800	284JM	**EJMM2531T**	5,892	PC3	25.94	317	93.6	230/460	30	1, 30
		284JP	**EJPM2531T**	5,892	PC3	28.81	335	93.6	230/460	30	1, 30
30	3600	284JM	**EJMM2534T**	7,015	PC3	26.56	309	91.7	230/460	33	1, 30
		284JP	**EJPM2534T**	7,015	PC3	29.44	310	91.7	230/460	33	1, 30
	1800	286JM	**EJMM2535T**	7,110	PC3	25.94	359	94.1	230/460	35	1, 30
		286JP	**EJPM2535T**	7,110	PC3	28.81	370	94.1	230/460	35	1, 30
40	3600	286JM	**EJMM2538T**	8,630	PC3	26.56	328	92.4	230/460	45	1, 30
		286JP	**EJPM2538T**	8,630	PC3	29.44	329	92.4	230/460	45	1, 30
	1800	324JM	**EJMM2539T**	9,169	PC3	27.44	417	94.1	230/460	49	1, 30
		324JP	**EJPM2539T**	9,169	PC3	30.31	378	94.1	230/460	47	1, 30
50	3600	324JM	**EJMM2542T**	9,597	PC3	26.94	421	93	230/460	58	1, 30
		324JP	**EJPM2542T**	9,597	PC3	29.81	424	93	230/460	58	1, 30
	1800	326JM	**EJMM2543T**	9,938	PC3	27.94	491	94.5	230/460	57	1, 30
		326JP	**EJPM2543T**	9,938	PC3	30.81	500	94.5	230/460	57	1, 30
60	3600	326JM	**EJMM2546T**	11,683	PC3	26.94	472	93.6	230/460	68	1, 30
	1800	364JP	**EJPM2547T**	12,269	PC3	33.19	565	95	230/460	68	1, 30
75	1800	365JP	**EJPM2551T**	14,619	PC3	36.22	597	95	230/460	87	1, 30
Foot mounted, 575 volts											
3	3600	145JM	**EJMM3158T-5**	1,446	PC3	14.25	48	85.5	575	3	
	1800	182JM	**EJMM3211T-5**	1,834	PC3	16.50	74	89.5	575	3.1	1
5	3600	182JM	**EJMM3212T-5**	1,729	PC3	16.50	63	90.2	575	4.5	
	1800	184JM	**EJMM3218T-5**	1,969	PC3	18.00	92	89.5	575	5.2	1
7 1/2	3600	184JM	**EJMM3219T-5**	2,495	PC3	16.50	77	88.5	575	6.9	1
	1800	213JM	**EJMM3311T-5**	2,824	PC3	18.19	120	91	575	7.4	1, 35
10	3600	213JM	**EJMM3312T-5**	2,921	PC3	19.31	137	91.7	575	9.2	
	1800	215JM	**EJMM3313T-5**	3,303	PC3	18.19	132	91.7	575	10	1
15	3600	215JM	**EJMM3314T-5**	3,917	PC3	19.31	131	90.2	575	14	1
Footless, 230/460											
1	1800	143JM	**VEJMM3116T**	1,164	PC3	14.43	37	85.5	230/460	1.5	1, 30
1 1/2	1800	145JM	**VEJMM3154T**	1,248	PC3	15.43	43	86.5	230/460	2.2	1, 30
2	1800	145JM	**VEJMM3157T**	1,365	PC3	15.43	46	86.5	230/460	2.9	1, 30
3	3600	145JM	**VEJMM3158T**	1,446	PC3	14.25	48	85.5	230/460	3.8	1, 30
	1800	184JM	**VEJMM3211T**	1,498	PC3	18.06	74	89.5	230/460	4.2	1, 30
5	3600	182JM	**VEJMM3212T**	1,729	PC3	16.66	63	86.5	230/460	6	1, 30
	1800	184JM	**VEJMM3218T**	1,696	PC3	19.56	84	89.5	230/460	6.6	1, 30
7 1/2	3600	184JM	**VEJMM3219T**	2,495	PC3	18.04	77	88.5	230/460	8.6	1, 30
	1800	213JM	**VEJMM3311T**	2,559	PC3	19.78	125	91	230/460	9.6	1, 30
10	3600	213JM	**VEJMM3312T**	2,921	PC3	18.19	121	89.5	230/460	12	1, 30
	1800	215JM	**VEJMM3313T**	2,770	PC3	22.41	165	91.7	230/460	12	1, 30
15	3600	215JM	**VEJMM3314T**	3,917	PC3	18.69	131	90.2	230/460	17.5	1, 30
Footless, 575 volts											
1	1800	143JM	**VEJMM3116T-5**	1,164	PC3	15.43	44.00	86.5	575	1.1	
1 1/2	1800	145JM	**VEJMM3154T-5**	1,248	PC3	16.31	51.00	86.5	575	1.6	
2	1800	145JM	**VEJMM3157T-5**	1,365	PC3	16.31	52.00	86.5	575	2.1	
3	1800	182JM	**VEJMM3211T-5**	1,498	PC3	18.06	74.00	89.5	575	3.1	
5	1800	184JM	**VEJMM3218T-5**	1,696	PC3	18.06	77.00	89.5	575	5.2	

(a) See notes on inside back flap.
**ODP motors retain IP rating when mounted in horizontal position only.

Close-coupled pump, three phase, totally enclosed, foot mounted, washdown features

1 thru 20 Hp

IP55

Features:

- Oversized, double sealed ball bearings
- Locked DE bearing
- Neoprene gaskets
- Lip and V-Ring seal on DE
- NEMA Premium® efficiency
- White epoxy, corrosion resistant finish
- 300 series stainless steel hardware and shaft extension

Applications:

- Water pumps commercial and industrial
- Food processing
- Wet environment

Hp	RPM	NEMA Frame	Enclosure	Catalog Number	List Price	Disc. Sym.	"C" Dim.	Aprx. Wt. (lb)	Full Load Efficiency	Voltage	Full Load Amps	Notes (a)
1	3600	143JM	TENV	**JMEWDM3545T**	1,800	WDW	15.41	35	84	230/460	1.4	1
	1800	143JM	TENV	**JMEWDM3546T**	1,879	WDW	14.25	39	85.5	230/460	1.5	1, 30
1 1/2	3600	143JM	TENV	**JMEWDM3550T**	1,889	WDW	14.28	48	85.5	208-230/460	2	1, 30
	1800	145JM	TENV	**JMEWDM3554T**	1,963	WDW	15.16	50	86.5	230/460	2.1	30
2	3600	145JM	TEFC	**JMEWDM3555T**	2,062	WDW	15.43	47	85.5	208-230/460	2.5	1, 30
	1800	145JM	TEFC	**JMEWDM3558T**	2,149	WDW	16.34	48	86.5	230/460	2.9	1, 30
3	3600	145JM	TEFC	**JMEWDM3559T**	2,518	WDW	16.31	50	86.5	230/460	3.6	1, 30
	1800	182JM	TEFC	**JMEWDM3611T**	2,819	WDW	18.05	70	89.5	230/460	4.2	1, 30
5	3600	184JM	TEFC	**JMEWDM3613T**	3,323	WDW	18.05	81	88.5	230/460	5.6	1, 30
		184JM	TEFC	**JMEWDM3613T-5**	3,323	WDW	18.05	74	88.5	575	4.7	10
	1800	184JM	TEFC	**JMEWDM3615T**	3,175	WDW	19.55	93	89.5	230/460	6.7	1, 30
7 1/2	3600	184JM	TEFC	**JMEWDM3616T**	3,937	WDW	19.55	96	89.5	230/460	8.4	1, 30
	1800	213JM	TEFC	**JMEWDM3710T**	3,990	WDW	20.91	151	91.7	230/460	9.5	1, 30
10	3600	215JM	TEFC	**JMEWDM3711T**	5,083	WDW	20.91	130	90.2	208-230/460	10.8	1, 30
	1800	215JM	TEFC	**JMEWDM3714T**	4,242	WDW	22.41	165	91.7	230/460	12	1, 30
15	3600	215JM	TEFC	**JMEWDM3713T**	6,341	WDW	21.64	169	91	230/460	17	1, 30
	1800	254JM	TEFC	**JMEWDM23933T**	8,765	WDW	25.06	252	92.4	230/460	18	1, 30
20	3600	256JM	TEFC	**JMEWDM41906T**	10,176	WDW	25.06	255	91	230/460	23	2
	1800	256JM	TEFC	**JMEWDM23934T**	10,129	WDW	25.06	275	93	230/460	24	1, 30

(a) See notes on inside back flap.
Red catalog number indicates **NEW** product.

NEW!

Close-coupled pump, three phase, totally enclosed, foot mounted, washdown features

25 thru 75 Hp

IP55

Features:

- Oversized, double sealed ball bearings
- Locked DE bearing
- Neoprene gaskets
- Lip and V-Ring seal on DE
- NEMA Premium® efficiency
- White epoxy, corrosion resistant finish
- 300 series stainless steel hardware and shaft extension
- Rugged cast iron construction

Applications:

- Water pumps commercial and industrial
- Food processing
- Wet environment

Hp	RPM	NEMA Frame	Enclosure	Catalog Number	List Price	Disc. Sym.	"C" Dim.	Aprx. Wt. (lb)	Full Load Efficiency	Voltage	Full Load Amps	Notes (a)
25	3600	284JM	TEFC	**JMEWDM4107T**	8,492	WDW	28.44	446	91.7	230/460	30	1
	1800	284JM	TEFC	**JMEWDM4103T**	8,197	WDW	28.44	437	93.6	230/460	30	1
30	3600	286JM	TEFC	**JMEWDM4108T**	10,043	WDW	28.44	459	91.7	230/460	34	1, 30
	1800	286JM	TEFC	**JMEWDM4104T**	9,318	WDW	28.44	460	93.6	230/460	36	1
40	3600	324JM	TEFC	**JMEWDM4109T**	13,592	WDW	30.53	587	92.4	230/460	47	1
	1800	324JM	TEFC	**JMEWDM4110T**	12,078	WDW	30.53	600	94.1	230/460	46	1, 30
50	3600	326JM	TEFC	**JMEWDM4114T**	14,160	WDW	30.53	635	93	230/460	55	1
	1800	326JM	TEFC	**JMEWDM4115T**	13,876	WDW	30.53	700	94.5	230/460	57	1
60	3600	364TCZ	TEFC	**JMEWDM4310T**	21,161	WDW	33.11	999	93.6	230/460	66.1	
	1800	364TCZ	TEFC	**JMEWDM4314T**	20,094	WDW	33.11	961	95	230/460	70	
75	3600	365TCZ	TEFC	**JMEWDM4313T**	22,622	WDW	33.11	1005	94.5	230/460	80.7	
	1800	365TCZ	TEFC	**JMEWDM4316T**	21,649	WDW	33.11	965	95.4	230/460	86	

(a) See notes on inside back flap.
Cast iron frame
Red catalog number indicates **NEW** product.

Food Safe stainless steel, three phase, foot mounted, close-coupled pump, encapsulated

1 thru 20 Hp

IP69 for Water

Features:

- Individually welded feet for ease of cleaning
- Rotatable, round conduit box
- Welded & polished conduit box
- Smooth heads on external drains & hardware
- O-ring sealed endplates & conduit box
- Encapsulated, color-coded leads
- No crevices for food to collect
- 300 series stainless steel
- Epoxy encapsulated windings
- Laser etched nameplate
- Removable condensate drains in each endplate
- Internal & external shaft sealing
- Class H insulation system, inverter ready
- 3 year warranty, NEMA Premium® efficiency

Applications:

- Food processing
- High pressure washdown
- Caustic environment
- Pumps and wastewater
- Outdoors
- Sanitary washdown

Hp	RPM	NEMA Frame	Enclosure	Catalog Number	List Price	Disc. Sym.	"C" Dim.	Aprx. Wt. (lb)	Full Load Efficiency	Voltage	Full Load Amps	Notes (a)
1	1800	143JM	TENV	**JMFSWDM3546T-E**	3,440	WDF	14.97	37	85.5	230/460	1.5	30
1 1/2	3600	143JM	TENV	**JMFSWDM3550T-E**	3,578	WDF	15.85	50	85.5	230/460	1.8	30
	1800	145JM	TEFC	**JMFSWDM3554T-E**	3,598	WDF	16.15	45	86.5	230/460	2.2	30
2	3600	145JM	TEFC	**JMFSWDM3555T-E**	4,075	WDF	17.03	50	86.5	230/460	2.5	30
	1800	145JM	TEFC	**JMFSWDM3558T-E**	4,133	WDF	18.40	56	88.5	230/460	2.7	30
3	3600	145JM	TEFC	**JMFSWDM3559T-E**	4,895	WDF	18.40	61	86.5	230/460	3.7	30
	1800	182JM	TEFC	**JMFSWDM3611T-E**	5,139	WDF	19.72	83	89.5	230/460	4.2	30
5	3600	184JM	TEFC	**JMFSWDM3613T-E**	5,535	WDF	18.22	81	89.5	230/460	5.6	30
	1800	184JM	TEFC	**JMFSWDM3615T-E**	5,573	WDF	19.72	101	89.5	230/460	6.5	30
7 1/2	3600	213JM	TEFC	**JMFSWDM3709T-E**	6,524	WDF	20.62	131	91	230/460	8.3	30
	1800	213JM	TEFC	**JMFSWDM3710T-E**	6,647	WDF	21.81	139	91.7	230/460	9.5	
10	3600	215JM	TEFC	**JMFSWDM3711T-E**	7,315	WDF	21.81	154	91.7	230/460	10.6	30
	1800	215JM	TEFC	**JMFSWDM3714T-E**	7,717	WDF	23.56	187	92.4	230/460	12.5	30
15	3600	215JM	TEFC	**JMFSWDM3713T-E**	10,588	WDF	23.56	187	91.7	230/460	17	30
		254JM	TEFC	**JMFSWDM23994T-E**	12,328	WDF	25.67	265	91	230/460	16.5	
	1800	254JM	TEFC	**JMFSWDM23933T-E**	12,162	WDF	25.67	286	92.4	230/460	17.5	30
20	3600	256JM	TEFC	**JMFSWDM41906T-E**	13,882	WDF	26.67	300	91	230/460	21.5	
	1800	256JM	TEFC	**JMFSWDM23934T-E**	13,814	WDF	26.67	295	93	230/460	23.4	

(a) See notes on inside back flap.

NEW!

IEEE 841XL, P-base solid shaft pump, three phase, TEFC

3 thru 75 Hp

IP55

Features:

- Meets and exceeds the requirements of IEEE Std. 841
- Vertical lifting provisions for ease of installations
- Division 2, Class I, Groups A, B, C, D markings on the nameplate
- Severe Duty construction for harsh environments
- Inpro/seals at drive end and opposite drive end
- Inverter ready nameplate
- Meets IEEE 45 on nameplate
- IEEE 841 test report ships with the motor
- 5 year warranty

Applications:

- Normal, medium, and high thrust applications
- Severe duty applications
- Harsh environments
- Petro chemical
- Pulp and paper
- Wastewater
- Aggregate

Hp	RPM	NEMA Frame	Catalog Number	List Price	Disc. Sym.	"C" Dim.	Aprx. Wt. (lb)	Full Load Efficiency	Voltage	Full Load Amps	Notes (a)
Medium thrust											
3	3600	182LP	**VLECP83660T-4**	5,147	PV3	22.68	95	86.5	460	3.6	1
	1800	182LP	**VLECP83661T-4**	5,273	PV3	22.68	108	90.2	460	4.1	1
5	3600	184LP	**VLECP83663T-4**	5,888	PV3	22.68	123	88.5	460	5.7	1
	1800	184LP	**VLECP83665T-4**	5,502	PV3	22.68	115	89.5	460	6.6	1
7 1/2	3600	213LP	**VLECP83769T-4**	7,163	PV3	24.71	171	91.7	460	8.6	1
	1800	213LP	**VLECP83770T-4**	6,541	PV3	24.71	178	91.7	460	9.5	1
10	3600	215LP	**VLECP83771T-4**	7,140	PV3	24.71	189	91	460	11.3	1
	1800	215LP	**VLECP83774T-4**	7,413	PV3	24.71	231	91.7	460	12.2	1
15	3600	254LP	**VLECP82394T-4**	9,834	PV3	29.53	239	91	460	17	1
	1800	254LP	**VLECP82333T-4**	9,424	PV3	29.53	268	92.4	460	17.6	1
20	3600	256LP	**VLECP84106T-4**	10,621	PV3	29.53	310	91	460	22	1
	1800	256LP	**VLECP82334T-4**	9,827	PV3	34.59	420	93	460	23	1
25	3600	284LP	**VLECP84107T-4**	14,670	PV3	36.31	396	91.7	460	28	1
	1800	284LP	**VLECP84103T-4**	14,099	PV3	36.31	437	93.6	460	30	1
30	3600	286LP	**VLECP84108T-4**	16,160	PV3	36.31	400	91.7	460	34	1
	1800	286LP	**VLECP84104T-4**	15,335	PV3	36.31	460	93.6	460	36	1
40	3600	324LP	**VLECP84109T-4**	22,991	PV3	38.56	607	92.4	460	44	1
	1800	324LP	**VLECP84110T-4**	21,560	PV3	38.56	741	94.1	460	46	1
High thrust											
50	3600	326VP	**VPECP84114T-4**	19,977	PV3	35.24	635	93	460	55	1
	1800	326VP	**VPECP84115T-4**	19,655	PV3	35.24	700	94.5	460	57	1
60	3600	364VP	**VPECP84310T-4**	30,888	PV3	37.27	999	93.6	460	66	1
	1800	364VP	**VPECP84314T-4**	30,071	PV3	37.27	910	95	460	68	1
75	3600	365VP	**VPECP84313T-4**	32,051	PV3	37.27	1005	93.6	460	81.5	1
	1800	365VP	**VPECP84316T-4**	30,519	PV3	37.27	965	95.4	460	86	1

(a) See notes on inside back flap.
Red catalog number indicates **NEW** product.

P-base vertical solid shaft pump, three phase, TEFC

3 thru 75 Hp

IP55

Features:

- Vertical lifting provisions for ease of installation
- Severe Duty construction for harsh environments
- Corrosion resistant epoxy finish
- Stainless steel nameplates and seals

Applications:

- Normal, medium, and high thrust applications
- Severe duty applications
- Harsh environments
- Petro chemical
- Pulp and paper
- Wastewater
- Aggregate

Hp	RPM	NEMA Frame	Catalog Number	List Price	Disc. Sym.	"C" Dim.	Aprx. Wt. (lb)	Full Load Efficiency	Voltage	Full Load Amps	Notes (a)
Normal thrust											
3	3600	182HP	**VHECP3660T**	3,942	PV3	22.18	120	89.5	230/460	3.5	1, 30
	1800	182HP	**VHECP3661T**	3,530	PV3	22.18	129	89.5	230/460	4.1	1, 30
5	3600	184HP	**VHECP3663T**	4,787	PV3	22.18	99	90.2	230/460	5.7	1, 30
	1800	184HP	**VHECP3665T**	4,433	PV3	22.18	141	89.5	230/460	6.6	1, 30
7 1/2	3600	213HP	**VHECP3769T**	5,745	PV3	22.51	173	91	230/460	8.6	1, 30
	1800	213HP	**VHECP3770T**	5,340	PV3	22.51	170	91.7	230/460	9.5	1, 30
10	3600	215HP	**VHECP3771T**	5,974	PV3	22.51	203	92.4	230/460	11	1, 30
	1800	215HP	**VHECP3774T**	5,760	PV3	22.51	231	92.4	230/460	12.5	1, 30
15	3600	254HP	**VHECP2394T**	7,644	PV3	25.73	296	91.7	230/460	17.2	1, 30
	1800	254HP	**VHECP2333T**	7,352	PV3	25.72	316	92.4	230/460	18.1	1, 30
20	3600	256HP	**VHECP4106T**	8,444	PV3	25.73	325	92.4	230/460	23	1, 30
	1800	256HP	**VHECP2334T**	7,680	PV3	25.73	337	93	230/460	24	1, 30
25	3600	284HP	**VHECP4107T**	9,827	PV3	25.72	337	93	230/460	28	1, 30
	1800	284HP	**VHECP4103T**	9,426	PV3	30.69	518	93.6	230/460	30	1, 30
30	3600	286HP	**VHECP4108T**	11,304	PV3	25.72	361	93	230/460	33	1, 30
	1800	286HP	**VHECP4104T**	10,614	PV3	30.69	563	94.1	230/460	36	1, 30
40	3600	324HP	**VHECP4109T**	15,006	PV3	34.72	600	93.6	230/460	45	1, 30
	1800	324HP	**VHECP4110T**	13,565	PV3	34.72	650	94.5	230/460	46	1, 30
50	3600	326HP	**VHECP4114T**	15,548	PV3	34.72	668	93	230/460	56	1, 30
	1800	326HP	**VHECP4115T**	15,278	PV3	34.72	764	94.5	230/460	58	1, 30
60	3600	364HP	**VHECP4310T**	21,123	PV3	35.36	959	95	230/460	65.1	1, 30
	1800	364HP	**VHECP4314T**	19,449	PV3	35.36	969	95	230/460	68	1, 30
75	3600	365HP	**VHECP4313T**	23,149	PV3	35.36	1042	94.5	230/460	80.7	1, 30
	1800	365HP	**VHECP4316T**	22,060	PV3	35.36	1008	95.4	230/460	85.9	1, 30
Medium thrust											
3	3600	182LP	**VLECP3660T**	5,027	PV3	22.18	99	88.5	230/460	3.4	1
	1800	182LP	**VLECP3661T**	5,139	PV3	22.18	105	89.5	230/460	4.1	1
5	3600	184LP	**VLECP3663T**	5,534	PV3	22.18	105	90.2	230/460	5.7	1
	1800	184LP	**VLECP3665T**	5,180	PV3	22.18	119	89.5	230/460	6.6	1
7 1/2	3600	213LP	**VLECP3769T**	6,575	PV3	22.51	169	91	230/460	8.6	1
	1800	213LP	**VLECP3770T**	6,005	PV3	22.51	170	91.7	230/460	9.5	1
10	3600	215LP	**VLECP3771T**	6,804	PV3	22.51	182	92.4	230/460	11	1
	1800	215LP	**VLECP3774T**	6,590	PV3	22.51	231	92.4	230/460	12.5	1
15	3600	254LP	**VLECP2394T**	9,295	PV3	25.73	225	91	230/460	17	1
	1800	254LP	**VLECP2333T**	9,004	PV3	25.73	268	92.4	230/460	18.1	1

(a) See notes on inside back flap.

Cast iron frame

P-base vertical solid shaft pump, three phase, TEFC

Hp	RPM	NEMA Frame	Catalog Number	List Price	Disc. Sym.	"C" Dim.	Aprx. Wt. (lb)	Full Load Efficiency	Voltage	Full Load Amps	Notes (a)
Medium thrust (continued)											
20	3600	256LP	**VLECP4106T**	10,096	PV3	25.73	265	92.4	230/460	22	1
	1800	256LP	**VLECP2334T**	9,332	PV3	25.73	303	93	230/460	24	1
25	3600	284LP	**VLECP4107T**	12,266	PV3	32.44	396	91.7	230/460	28	1
	1800	286LP	**VLECP4103T**	11,864	PV3	32.44	420	93.6	230/460	30	1
30	3600	286LP	**VLECP4108T**	13,743	PV3	32.44	446	91.7	230/460	34	1
	1800	286LP	**VLECP4104T**	13,053	PV3	32.44	460	94.1	230/460	36	1
40	3600	324LP	**VLECP4109T**	18,199	PV3	34.72	528	93.6	230/460	45	1
	1800	324LP	**VLECP4110T**	16,758	PV3	34.72	600	94.5	230/460	46	1
High thrust											
50	3600	326VP	**VPECP4114T**	18,851	PV3	34.71	587	93	230/460	56	1
	1800	326VP	**VPECP4115T**	18,581	PV3	34.71	700	94.5	230/460	58	1
60	3600	364VP	**VPECP4310T**	25,548	PV3	37.25	999	95	230/460	65.1	1
	1800	364VP	**VPECP4314T**	23,873	PV3	37.25	910	95	230/460	68	1
75	3600	365VP	**VPECP4313T**	27,573	PV3	37.25	1005	94.5	230/460	80.7	1
	1800	365VP	**VPECP4316T**	26,485	PV3	37.25	965	95.4	230/460	85.9	1

(a) See notes on inside back flap.
Cast iron frame

SAE hydraulic pump motors, three phase, TEFC

5 thru 10 Hp

IP44

Features:

- Rated for continuous duty
- F-3 mounted conduit box
- SAE A or B-B pump configuration
- Designed for longevity with a 3 year warranty on premium efficient Super-E® Motors

Applications:

- Industrial pumps
- SAE pump applications
- General purpose pumps
- Commercial machinery
- Food and beverage
- Wastewater
- Agricultural

Hp	RPM	NEMA Frame	Catalog Number	List Price	Disc. Sym.	"C" Dim.	Aprx. Wt. (lb)	Full Load Efficiency	Voltage	Full Load Amps	Notes (a)
5	1800	184TYZ	**EHPM3615T**	1,713	PM3	15.00	93	89.5	230/460	6.7	
7 1/2	1800	213TYZ	**EHPM3710T**	2,383	PM3	15.79	127	91.7	230/460	9.4	
10	1800	215TYZ	**EHPM3714T**	2,664	PM3	17.29	165	91.7	230/460	12	

(a) See notes on inside back flap.

Submersible motors, single phase, TENV

1 thru 5 Hp

IP68

Features:

- Continuous duty in water/sewage
- 15 minute in air
- 416 stainless steel shaft
- Dual carbon ceramic mechanical seals
- Two NC thermostats
- Dual moisture sensing probes
- NEMA 1 enclosure control box
- Solid-state electronic switch for improved reliability
- 1.15 Service Factor
- UL listed, Division 1, Class I, Group C & D, T3C
- 5 year pro-rated warranty

Applications:

- Wet pit applications
- Slurry pumps
- Aerators
- Mixers

Hp	RPM	NEMA Frame	Catalog Number	XP Cls/Grp	Temp Code	List Price	Disc. Sym.	"C" Dim.	Aprx. Wt. (lb)	Full Load Efficiency	Voltage	Full Load Amps	Notes (a)
1	1800	180TY	**SUL50104SM**	④	T3C	8,358	SU1	25.94	240	55	230	8.1	10, 97
	1200	180TY	**SUL50106SM**	④	T3C	8,785	SU1	25.94	240	55.6	230	8.6	10, 97
1 1/2	1800	180TY	**SUL50154SM**	④	T3C	8,358	SU1	25.94	291	62.5	230	10.6	10, 97
	1200	180TY	**SUL50156SM**	④	T3C	10,166	SU1	25.94	256	57	230	12.5	10, 97
2	1800	180TY	**SUL50204SM**	④	T3C	9,358	SU1	25.94	250	60.9	230	14.4	10, 97
3	1800	180TY	**SUL50304SM**	④	T3C	11,912	SU1	26.66	260	64.7	230	20	10, 97
		180TY	**SUL50304**	④	T3C	11,912	SU1	25.94	256	64.7	230	20	10
	1200	210TY	**SUL50306SM**	④	T3C	14,288	SU1	32.41	315	65.6	230	21	10, 97
5	1800	210TY	**SUL50504**	④	T3C	15,638	SU1	31.69	369	69	230	30	10

(a) See notes on inside back flap.
SM suffix = one size smaller flange and shaft.
④ = Class I, Group C & D
Cast iron frame
All 180TY and 210TY catalog numbers are furnished without lead cable assemblies.
See Lead Cable Assemblies table for ordering information.

Submersible motors, three phase, TENV

1 thru 100 Hp

IP68

Features:

- Continuous duty in water/sewage
- 15 minute in air
- 416 stainless steel shaft
- Dual carbon ceramic mechanical seals
- Two NC thermostats
- 25-foot cable (standard, 250 Frame and up)
- Dual moisture sensing probes
- 1.15 Service Factor
- UL listed, Division 1, Class I, Group C & D, T3C
- Inverter capable for 10:1 variable torque
- UL listed, Division 1, Class I, Group C & D, T2A on Inverter
- 5 year pro-rated warranty

Applications:

- Wet pit applications
- Slurry pumps
- Aerators
- Mixers

Hp	RPM	NEMA Frame	Catalog Number	XP Cls/ Grp	Temp Code	List Price	Disc. Sym.	"C" Dim.	Aprx. Wt. (lb)	Full Load Efficiency	Voltage	Full Load Amps	Notes (a)
UL listed, hazardous duty, explosion proof													
1	1800	180TY	**SUM70104SM**	④	T3C	6,917	SU3	25.94	169	63.5	230	3.4	81, 97
1 1/2	1800	180TY	**SUM70154SM**	④	T3C	7,117	SU3	25.94	175	70.5	230	4.6	81, 97
2	1800	180TY	**SUM70204SM**	④	T3C	7,274	SU3	25.94	183	73.5	230	5.8	81, 97
		180TY	**SUM70204SM-8**	④	T3C	7,274	SU3	25.94	182	73.5	200	6.7	81, 97
3	1800	180TY	**SUM70304SM**	④	T3C	7,367	SU3	25.94	200	78.1	230	8.8	81, 97
	1200	180TY	**SUM70306**	④	T3C	7,507	SU3	26.66	235	78	230	10.4	81
5	1800	180TY	**SUM70504**	④	T3C	7,735	SU3	26.66	240	80.2	230	14	81
		180TY	**SUM70504-4**	④	T3C	7,735	SU3	26.66	235	80.2	460	7	81
		180TY	**SUM70504-8**	④	T3C	7,735	SU3	26.66	235	80.2	200	16.1	81
		180TY	**SUM70504SM-4**	④	T3C	7,735	SU3	26.66	235	80.2	460	7	81, 97
	1200	180TY	**SUM70506**	④	T3C	10,631	SU3	26.66	248	80.7	230	16	81
7 1/2	1800	180TY	**SUM70754**	④	T3C	10,003	SU3	26.66	243	82.7	230	20.2	81
		180TY	**SUM70754-4**	④	T3C	10,003	SU3	26.66	245	82.7	460	10.1	81
		180TY	**SUM70754SM-4**	④	T3C	10,003	SU3	26.66	245	82.7	460	10.1	81, 97
	1200	210TY	**SUM70756**	④	T3C	11,378	SU3	31.93	391	81.7	230	20.8	81
		210TY	**SUM70756-4**	④	T3C	11,378	SU3	31.93	391	81.7	460	10.4	10,81
10	1800	210TY	**SUM71004**	④	T3C	10,377	SU3	31.93	362	85.6	230	25	81
		210TY	**SUM71004-4**	④	T3C	10,377	SU3	31.93	362	85.6	460	12.5	81
		210TY	**SUM71004SM-4**	④	T3C	10,377	SU3	32.65	362	85.6	460	12.5	81, 97
	1200	210TY	**SUM71006**	④	T3C	14,310	SU3	31.93	380	83.8	230	28	81
		210TY	**SUM71006-4**	④	T3C	14,310	SU3	31.93	380	83.8	460	14	10,81
15	1800	210TY	**SUM71504**	④	T3C	13,650	SU3	31.93	360	85.4	230	38	81
		210TY	**SUM71504-4**	④	T3C	13,650	SU3	31.93	360	85.4	460	19	81
		210TY	**SUM71504SM-4**	④	T3C	13,650	SU3	32.65	360	85.4	460	19	81, 97
	1200	250TY	**SUM71506-4**	④	T3C	19,336	SU3	39.40	530	86.5	460	21	81
20	1800	210TY	**SUM72004SM-4**	④	T3C	15,241	SU3	32.65	367	86.6	460	27.1	81, 97
		210TY	**SUM72004-4**	④	T3C	16,164	SU3	31.93	367	86.6	460	27.1	81
	1200	250TY	**SUM72006-4**	④	T3C	21,322	SU3	39.40	530	86.7	460	29	81
25	1800	250TY	**SUM72504-4**	④	T3C	19,953	SU3	39.40	525	88.5	460	31	81
		250TY	**SUM72504SM-4**	④	T3C	19,953	SU3	37.93	525	88.5	460	31	81, 97
	1200	250TY	**SUM72506-4**	④	T3C	27,666	SU3	39.40	580	86.7	460	41	81
		250TY	**SUM72506SM-4**	④	T3C	27,666	SU3	37.93	585	86.7	460	41	81, 97

(a) See notes on inside back flap.
SM suffix = one size smaller flange and shaft.
④ = Class I, Group C & D
Cast iron frame
All 180TY and 210TY catalog numbers are furnished without lead cable assemblies.
See Lead Cable Assemblies table for ordering information.

Submersible motors, three phase, TENV

Hp	RPM	NEMA Frame	Catalog Number	XP Cls/ Grp	Temp Code	List Price	Disc. Sym.	"C" Dim.	Aprx. Wt. (lb)	Full Load Efficiency	Voltage	Full Load Amps	Notes (a)
UL listed, hazardous duty, explosion proof (continued)													
30	1800	250TY	**SUM73004-4**	④	T3C	21,552	SU3	39.40	595	88.7	460	34	81
		250TY	**SUM73004SM-4**	④	T3C	21,552	SU3	37.93	595	88.7	460	34	81, 97
	1200	320TY	**SUM73006-4**	④	T3C	33,199	SU3	48.63	900	89.7	460	41	10, 82
40	1800	250TY	**SUM74004-4**	④	T3C	29,178	SU3	39.40	555	89	460	50	82
50	1800	320TY	**SUM75004-4**	④	T3C	34,146	SU3	48.63	980	91.1	460	60	10, 82
		320TY	**SUM75004SM-4**	④	T3C	34,146	SU3	48.10	945	91.1	460	60	10, 82, 97
	1200	320TY	**SUM75006-4**	④	T3C	37,029	SU3	48.63	1050	90.5	460	63	10, 82
60	1800	320TY	**SUM76004-4**	④	T3C	43,672	SU3	48.63	1020	92	460	76	10, 82
75	1800	320TY	**SUM77504-4**	④	T3C	56,619	SU3	48.63	1070	92.6	460	88	10, 82
	1200	360TY	**SUM77506-4**	④	T3C	57,893	SU3	47.10	1374	92.3	460	90.9	10, 82
100	1800	360TY	**SUM710004-4**	④	T3C	60,201	SU3	47.10	1340	91.6	460	116	10, 82
	1200	360TY	**SUM710006-4**	④	T3C	74,411	SU3	47.10	1500	91.2	460	122	10, 82
Non-UL listed, non hazardous duty													
7 1/2	1800	210TY	**SUM20754**			7,334	SU3	31.93	359	82.8	230	18.4	81
		210TY	**SUM20754-4**			7,334	SU3	31.93	359	82.8	460	9.2	81
10	1800	210TY	**SUM21004**			8,554	SU3	31.93	353	85.6	230	25	81
		210TY	**SUM21004-4**			8,554	SU3	31.93	353	85.6	460	12.5	81
15	1800	210TY	**SUM21504**			11,093	SU3	31.93	360	85.4	230	38	81
		210TY	**SUM21504-4**			11,093	SU3	31.93	360	85.4	460	19	81

(a) See notes on inside back flap.
SM suffix = one size smaller flange and shaft.
④ = Class I, Group C & D
Cast iron frame
All 180TY and 210TY catalog numbers are furnished without lead cable assemblies.
See Lead Cable Assemblies table for ordering information.

Submersible motor lead cable assemblies

Selection required for ALL 180TY and 210TY catalog ratings

Features:

- UL/CSA approved for Class 1 Div 1 Group C and D. Meets UL1202 for non-circuit interrupting connector.
- 316 stainless steel, prewired receptacles with 304 stainless steel plug coupling nuts.
- Cables are packaged separately from the motor, radically reducing the chances of in-transit damage.
- Supports field conversion to alternate cable lengths and simplifies routine maintenance.

Hp	RPM	NEMA Frame	Catalog Number	25 Feet Kit Number	25 Feet List Price	25 Feet Disc. Sym.	25 Feet Aprx. Wt. (lb)	50 Feet Kit Number	50 Feet List Price	50 Feet Disc. Sym.	50 Feet Aprx. Wt. (lb)	100 Feet Kit Number	100 Feet List Price	100 Feet Disc. Sym.	100 Feet Aprx. Wt. (lb)
Single Phase, UL listed, XP															
1	1800	180TY	**SUL50104SM**	**802386203R**	1,286	SCG	17	**802386203T**	1,805	SCG	28	**802386203V**	2,887	SCG	51
	1200	180TY	**SUL50106SM**	**802386203R**	1,286	SCG	17	**802386203T**	1,805	SCG	28	**802386203V**	2,887	SCG	51
1 1/2	1800	180TY	**SUL50154SM**	**802386203R**	1,286	SCG	17	**802386203T**	1,805	SCG	28	**802386203V**	2,887	SCG	51
	1200	180TY	**SUL50156SM**	**802386203R**	1,286	SCG	17	**802386203T**	1,805	SCG	28	**802386203V**	2,887	SCG	51
2	1800	180TY	**SUL50204SM**	**802386203R**	1,286	SCG	17	**802386203T**	1,805	SCG	28	**802386203V**	2,887	SCG	51
3	1800	180TY	**SUL50304SM**	**802386203R**	1,286	SCG	17	**802386203T**	1,805	SCG	28	**802386203V**	2,887	SCG	51
		180TY	**SUL50304**	**802386203R**	1,286	SCG	17	**802386203T**	1,805	SCG	28	**802386203V**	2,887	SCG	51
	1200	210TY	**SUL50306SM**	**802386201R**	1,791	SCG	23	**802386201T**	2,887	SCG	42	**802386201V**	4,619	SCG	81
5	1800	210TY	**SUL50504**	**802386201R**	1,791	SCG	23	**802386201T**	2,887	SCG	42	**N/A**	N/A	N/A	N/A
Three Phase, UL listed, XP															
1	1800	180TY	**SUM70104SM**	**802386203R**	1,286	SCG	17	**802386203T**	1,805	SCG	28	**802386203V**	2,887	SCG	51
1 1/2	1800	180TY	**SUM70154SM**	**802386203R**	1,286	SCG	17	**802386203T**	1,805	SCG	28	**802386203V**	2,887	SCG	51
2	1800	180TY	**SUM70204SM**	**802386203R**	1,286	SCG	17	**802386203T**	1,805	SCG	28	**802386203V**	2,887	SCG	51
		180TY	**SUM70204SM-8**	**802386203R**	1,286	SCG	17	**802386203T**	1,805	SCG	28	**802386203V**	2,887	SCG	51
3	1800	180TY	**SUM70304SM**	**802386203R**	1,286	SCG	17	**802386203T**	1,805	SCG	28	**802386203V**	2,887	SCG	51
	1200	180TY	**SUM70306**	**802386203R**	1,286	SCG	17	**802386203T**	1,805	SCG	28	**802386203V**	2,887	SCG	51
5	1800	180TY	**SUM70504**	**802386203R**	1,286	SCG	17	**802386203T**	1,805	SCG	28	**802386203V**	2,887	SCG	51
		180TY	**SUM70504-4**	**802386203R**	1,286	SCG	17	**802386203T**	1,805	SCG	28	**802386203V**	2,887	SCG	51
		180TY	**SUM70504-8**	**802386203R**	1,286	SCG	17	**802386203T**	1,805	SCG	28	**802386203V**	2,887	SCG	51
		180TY	**SUM70504SM-4**	**802386203R**	1,286	SCG	17	**802386203T**	1,805	SCG	28	**802386203V**	2,887	SCG	51
	1200	180TY	**SUM70506**	**802386203R**	1,286	SCG	17	**802386203T**	1,805	SCG	28	**802386203V**	2,887	SCG	51
7 1/2	1800	180TY	**SUM70754**	**802386201R**	1,791	SCG	23	**802386201T**	2,887	SCG	42	**802386201V**	4,619	SCG	81
		180TY	**SUM70754-4**	**802386203R**	1,286	SCG	17	**802386203T**	1,805	SCG	28	**802386203V**	2,887	SCG	51
		180TY	**SUM70754SM-4**	**802386203R**	1,286	SCG	17	**802386203T**	1,805	SCG	28	**802386203V**	2,887	SCG	51
	1200	210TY	**SUM70756**	**802386201R**	1,791	SCG	23	**802386201T**	2,887	SCG	42	**802386201V**	4,619	SCG	81
		210TY	**SUM70756-4**	**802386201R**	1,791	SCG	23	**802386201T**	2,887	SCG	42	**802386201V**	4,619	SCG	81
10	1800	210TY	**SUM71004**	**802386201R**	1,791	SCG	23	**802386201T**	2,887	SCG	42	**802386201V**	4,619	SCG	81
		210TY	**SUM71004-4**	**802386201R**	1,791	SCG	23	**802386201T**	2,887	SCG	42	**802386201V**	4,619	SCG	81
		210TY	**SUM71004SM-4**	**802386201R**	1,791	SCG	23	**802386201T**	2,887	SCG	42	**802386201V**	4,619	SCG	81
	1200	210TY	**SUM71006**	**802386201R**	1,791	SCG	23	**802386201T**	2,887	SCG	42	**802386201V**	4,619	SCG	81
		210TY	**SUM71006-4**	**802386201R**	1,791	SCG	23	**802386201T**	2,887	SCG	42	**802386201V**	4,619	SCG	81
15	1800	210TY	**SUM71504**	**802386204R**	1,937	SCG	32	**802386204T**	3,143	SCG	58	**802386204V**	5,006	SCG	110
		210TY	**SUM71504-4**	**802386204R**	1,937	SCG	32	**802386204T**	3,143	SCG	58	**802386204V**	5,006	SCG	110
		210TY	**SUM71504SM-4**	**802386204R**	1,937	SCG	32	**802386204T**	3,143	SCG	58	**802386204V**	5,006	SCG	110
20	1800	210TY	**SUM72004SM-4**	**802386204R**	1,937	SCG	32	**802386204T**	3,143	SCG	58	**802386204V**	5,006	SCG	110
		210TY	**SUM72004-4**	**802386204R**	1,937	SCG	32	**802386204T**	3,143	SCG	58	**802386204V**	5,006	SCG	110
Three Phase, Non-UL listed, non XP															
7 1/2	1800	210TY	**SUM20754**	**802386203R**	1,286	SCG	17	**802386203T**	1,805	SCG	28	**802386203V**	2,887	SCG	51
		210TY	**SUM20754-4**	**802386203R**	1,286	SCG	17	**802386203T**	1,805	SCG	28	**802386203V**	2,887	SCG	51
10	1800	210TY	**SUM21004**	**802386201R**	1,791	SCG	23	**802386201T**	2,887	SCG	42	**802386201V**	4,619	SCG	81
		210TY	**SUM21004-4**	**802386201R**	1,791	SCG	23	**802386201T**	2,887	SCG	42	**802386201V**	4,619	SCG	81
15	1800	210TY	**SUM21504**	**802386204R**	1,937	SCG	32	**802386204T**	3,143	SCG	58	**802386204V**	5,006	SCG	110
		210TY	**SUM21504-4**	**802386204R**	1,937	SCG	32	**802386204T**	3,143	SCG	58	**802386204V**	5,006	SCG	110

Kits consist of (1) set of power lead cables and (1) set of control lead cables of the specified length with attached receptacles.

Selection required for ALL 180TY and 210TY catalog ratings

Additional cable lengths are available on custom submersible motors. Contact your sales representative.

HVAC motors

Baldor-Reliance® HVAC motors are specifically engineered with industry-driven designs to keep your air handling systems running smoothly, quietly, and efficiently, which means better system reliability and performance, with less maintenance.

Key features:

- Dynamically balanced rotor to reduce noise and increase bearing life
- Color coded and numbered leads for ease of connectivity
- Bar code spec number for easy identification
- Low noise vibration dampening bases
- Baldor-Reliance motors meet or exceed all efficiency requirements for US, Canada and Mexico regulations

Super-E®, general purpose

Electrical features

- Three phase
- Output range: 1 - 100 Hp
- Voltages: 230/460, 208-230/460, 200, 575
- 1.15 service factor
- Class F Insulation

Mechanical features

- Enclosures: ODP, TEFC
- Mountings: Footed, F1 or F2
- External shaft grounding provisions on drive end
- Bar-coded spec number label for easy identification

Applications: Blowers and fans

Super-E, internal shaft grounded

Electrical features

- Three phase
- Voltages: 230/460, 208-230/460, 200, 575
- Class H insulation
- Designed for variable speed applications

Mechanical features

- Enclosures: ODP, TEFC
- Mountings: Footed F1, C-Face
- Internal shaft ground installed

Applications: Variable speed blowers and fans

Chiller/cooling tower

Electrical features

- Three phase
- Voltages: 230/460, 208-230/460, 200, 575
- 1.15 service factor
- Class F Insulation

Mechanical features

- Enclosures: TEAO, TEFC
- Mountings: Footed F1
- Three barrier conduit box sealing
- Four barrier shaft sealing system on drive end
- Double sealed bearings
- Face drains each end
- Stainless hardware

Applications: Belted or drive shaft chiller/cooling towers

EC Titanium

Electrical features

- Efficiencies meet or exceed IE5
- Motor only: 1-20 Hp
- Integrated motor-drive: 1-10 Hp Top Mount, 1-7.5 Hp Axial Mount
- Voltages: 115, 230 1 Phase, and 230, 460 3 Phase
- Base Speeds: 1800 Standard, 3600, 1200, 900 Custom

Mechanical features

- Enclosures: TEFC/IP54 Motor with UL
- Versions: Motor only, top-mount drive, axial mount drive *
- NEMA frames (140, 180 & 210)
- Compact, light weight design, internal shaft grounded

* For EC Titanium selections, see Variable Speed AC section

Applications: Air handling, HVAC systems, general purpose

NEW!

Critical Cooling Motor, Inverter Duty, TEAO, with bearing protection

1 thru 30 Hp

Critical Cooling
Ceramic bearings installed

IP54

Features:

- Robust cast iron frame construction
- Suitable for inverter use per NEMA MG1 Part 31.4.4.2
- Sealed Hybrid Ceramic bearings to protect against shaft currents
- Designed for longevity with a 5 year warranty

Applications:

- Direct drive applications
- Air Handling
- Fans
- HVAC Systems
- Variable speed applications

Hp	RPM	NEMA Frame	Catalog Number	List Price	Disc. Sym.	"C" Dim.	Aprx. Wt. (lb)	Full Load Efficiency	Voltage	Full Load Amps	Notes (a)
1	1800	143T	**HBAO3581T**	1,494	HB3	11.44	58	86.5	230/460	2.9	30
2	3600	145T	**HBAO3586T**	1,645	HB3	11.44	64	86.5	230/460	5.4	30
	1800	145T	**HBAO3587T**	1,587	HB3	11.44	64	86.5	230/460	5.7	30
3	3600	182T	**HBAO3660T**	1,847	HB3	13.89	95	89.5	230/460	7.5	30
	1800	182T	**HBAO3661T**	1,776	HB3	13.89	100	89.5	230/460	8.4	30
5	3600	184T	**HBAO3663T**	2,012	HB3	13.89	105	90.2	230/460	12	30
	1800	184T	**HBAO3665T**	1,910	HB3	13.89	120	90.2	230/460	13.7	30
7.5	3600	213T	**HBAO3769T**	2,885	HB3	16.88	173	91	230/460	19	30
	1800	213T	**HBAO3770T**	2,649	HB3	16.88	198	91.7	230/460	19	30
10	3600	215T	**HBAO3771T**	2,919	HB3	16.88	203	91.7	230/460	24	30
	1800	215T	**HBAO3774T**	2,941	HB3	16.88	231	92.4	230/460	26.3	30
15	3600	254T	**HBAO2394T**	5,194	HB3	20.75	239	91.7	230/460	34.4	30
	1800	254T	**HBAO2333T**	4,793	HB3	20.75	268	92.4	230/460	36.2	30
20	3600	256T	**HBAO4106T**	5,153	HB3	23.00	293	91	230/460	23	30
	1800	256T	**HBAO2334T**	5,203	HB3	23.00	293	93	230/460	24	30
25	3600	284T	**HBAO4118T**	6,715	HB3	25.63	378	91.7	230/460	29	30
	1800	286T	**HBAO4103T**	6,795	HB3	25.63	378	93.6	230/460	30	30
30	3600	286T	**HBAO4108T**	7,858	HB3	25.63	410	91.7	230/460	34	30
	1800	286T	**HBAO4104T**	7,943	HB3	25.63	410	93.6	230/460	38	30

(a) See notes on inside back flap.
Cast iron frame
Red catalog number indicates **NEW** product.

NEW!

NEW!

Critical Cooling Motor, Inverter Duty, TEFC, foot mounted, with bearing protection

1 thru 30 Hp

Critical Cooling
Ceramic bearings installed

IP54

Features:

- Robust cast iron frame construction
- Suitable for inverter use per NEMA MG1 Part 31.4.4.2
- Sealed Hybrid Ceramic bearings to protect against shaft currents
- Designed for longevity with a 5 year warranty

Applications:

- Direct drive applications
- Air Handling
- Fans
- HVAC Systems
- Variable speed applications

Hp	RPM	NEMA Frame	Catalog Number	New Spec List Price	Disc. Sym.	"C" Dim.	Aprx. Wt. (lb)	Full Load Efficiency	Voltage	Full Load Amps	Notes (a)
230/460 volt											
1	1800	143T	**HBEM3546T**	1,492	HB3	12.31	30	85.5	230/460	1.5	8,30
	1800	143T	**HBEM3581T**	1,823	HB3	12.54	55	85.5	230/460	1.5	8,30
	1200	145T	**HBEM3556T**	1,732	HB3	13.31	43	82.5	230/460	1.8	8,30
	1200	145T	**HBEM3582T**	2,011	HB3	12.54	56	82.5	230/460	1.7	8,30
1 1/2	1800	145T	**HBEM3554T**	1,540	HB3	13.31	42	86.5	230/460	2.2	8,30
	1800	145T	**HBEM3584T**	1,881	HB3	12.54	61	86.5	230/460	2.3	8,30
	1200	182T	**HBEM3607T**	2,031	HB3	16.54	76	87.5	230/460	2.4	8,30
	1200	182T	**HBEM3667T**	2,364	HB3	15.24	99	87.5	230/460	2.5	8
2	1800	145T	**HBEM3558T**	1,587	HB3	13.31	42	86.5	230/460	2.9	8,30
	1800	145T	**HBEM3587T**	1,960	HB3	12.54	62	86.5	230/460	2.9	8,30
	1200	184T	**HBEM3614T**	2,113	HB3	18.04	94	88.5	230/460	3.5	8,30
	1200	184T	**HBEM3664T**	2,398	HB3	15.24	123	88.5	230/460	3.15	8,30
3	1800	182T	**HBEM3611T**	1,775	HB3	16.54	74	89.5	230/460	4.2	8,30
	1800	182T	**HBEM3661T**	2,210	HB3	15.24	105	89.5	230/460	4.1	8,30
	1200	213T	**HBEM3704T**	2,688	HB3	19.01	135	89.5	230/460	4.6	8,30
	1200	213T	**HBEM3764T**	2,936	HB3	18.45	211	89.5	230/460	4.5	8,30
5	1800	184T	**HBEM3615T**	1,910	HB3	18.04	92	89.5	230/460	6.7	8,30
	1800	184T	**HBEM3665T**	2,254	HB3	15.24	115	89.5	230/460	6.6	8,30
	1200	215T	**HBEM3708T**	2,986	HB3	19.76	154	89.5	230/460	7.3	8,30
	1200	215T	**HBEM3768T**	3,359	HB3	18.45	198	89.5	230/460	7.4	8,30
7 1/2	1800	213T	**HBEM3710T**	2,648	HB3	19.01	129	91.7	230/460	9.4	8,30
	1800	213T	**HBEM3770T**	3,292	HB3	18.45	193	91.7	230/460	9.5	8,30
	1200	254T	**HBEM2276T**	4,864	HB3	23.3	281	91	230/460	11	8,30
10	1800	215T	**HBEM3714T**	2,941	HB3	20.51	156	91.7	230/460	12	8,30
	1800	215T	**HBEM3774T**	3,264	HB3	18.45	232	91.7	230/460	12.2	8
	1200	256T	**HBEM2332T**	5,480	HB3	23.3	322	91	230/460	14.1	8,30
15	1800	254T	**HBEM2333T**	4,447	HB3	23.3	270	92.4	230/460	18.1	8,30
	1200	284T	**HBEM4100T**	7,284	HB3	27.76	369	91.7	230/460	21	8,30
20	1800	256T	**HBEM2334T**	5,286	HB3	23.3	295	93	230/460	24	8,30
	1200	286T	**HBEM4102T**	9,484	HB3	27.76	393	91.7	230/460	27	8,30
25	1800	284T	**HBEM4103T**	6,903	HB3	27.76	400	93.6	230/460	30	8,30
30	1800	286T	**HBEM4104T**	8,068	HB3	27.76	410	93.6	230/460	38	8,30

(a) See notes on inside back flap.
Cast iron frame
Red catalog number indicates **NEW** product.
*IP54 when drain fitting kit #HA5027A03 is installed in the weep holes (48 thru 256T frame motors only)

NEW!

NEW!

Critical Cooling Motor, Inverter Duty, three phase, totally enclosed

1 thru 20 Hp

Critical Cooling
Ceramic bearings installed

IP54

Features:

- IE5+ Motor Efficiency
- FASR - Magnet Assisted Synchronous Reluctance Rotor
- Sealed Hybrid Ceramic Bearings to protect against shaft currents
- For inverter use only per NEMA MG1 Part 31.4.4.2
- 1.5 Service Factor design
- Designed for longevity with 5 year warranty

Applications:

- Direct drive applications
- Air handling
- HVAC Systems
- Variable speed applications

Hp	Base Speed RPM	C.H. Speed RPM	NEMA Frame	Enclosure	Catalog Number	List Price	Disc. Sym.	"C" Dim.	Aprx. Wt. (lb)	Full Load Efficiency	Voltage	Full Load Amps	Notes (a)
5	1800	4000	143T	TEFC	**ECC101M0H5DF4**	2,388	EC1	15.54	64	93.0%	230/460	10.4/5.2	1
5	1800	4000	182T	TEFC	**ECC101M0H5EF4**	2,463	EC1	16.54	68	93.7%	230/460	10.5/5.3	1
7.5	1800	4000	184T	TEFC	**ECC101M0H7EF4**	3,257	EC1	18.04	92	94.0%	230/460	17.5/8.8	1
7.5	1800	3000	213T	TEFC	**ECC101M0H7FF4**	3,487	EC1	17.89	105	94.0%	230/460	17.4/8.7	1
10	1800	3000	213T	TEFC	**ECC101M0H10FF4**	3,676	EC1	19.02	123	94.8%	230/460	22.0/11.0	1
15	1800	3000	215T	TEFC	**ECC101M0H15FF4**	5,559	EC1	21.96	168	95.6%	230/460	34.8/17.4	1
20	1800	3000	215T	TEFC	**ECC101M4H20FF4**	6,608	EC1	23.51	218	95.9%	460	21.6	1, 82

(a) See notes on inside back flap.
Red catalog number indicates **NEW** product.

Super-E®, three phase, TEFC, foot mounted, with internal Baldor-Reliance® Shaft Grounding Brush

1 thru 50 Hp

BALDOR · RELIANCE®
SHAFT GROUNDING BRUSH
INSTALLED
LB1508

IP44*

Features:

- Class H insulation for increased protection on inverter use
- Internal grounding brush for bearing current mitigation on DE retainer ring
- Designed for longevity with 3 year warranty
- Suitable for inverter use per NEMA MG1 Part 31.4.4.2

Applications:

- Fans
- Pumps
- Blowers
- Unit handling
- HVAC systems
- Variable speed applications
- General purpose applications

Hp	RPM	NEMA Frame	Catalog Number	List Price	Disc. Sym.	"C" Dim.	Aprx. Wt. (lb)	Full Load Efficiency	Voltage	Full Load Amps	Notes (a)
Foot mounted											
1	1800	143T	**EM3546T-BG**	1,436	HV3	13.31	38	85.5	230/460	1.5	8,30
	1800	143T	**EM3581T-BG**	1,754	HV3	12.54	55	85.5	230/460	1.5	8,30
	1200	145T	**EM3582T-BG**	1,935	HV3	12.54	56	82.5	230/460	1.7	8,30
1 1/2	3600	143T	**EM3583T-BG**	1,841	HV3	12.54	56	84	230/460	1.9	8,30
	1800	145T	**EM3554T-BG**	1,482	HV3	13.31	41	86.5	230/460	2.2	8,30
	1800	145T	**EM3584T-BG**	1,810	HV3	12.54	61	86.5	230/460	2.3	8,30
	1200	182T	**EM3667T-BG**	2,274	HV3	15.24	99	87.5	230/460	2.5	8
2	3600	145T	**EM3555T-BG**	1,582	HV3	13.31	41	85.5	230/460	2.5	8,30
	3600	145T	**EM3586T-BG**	1,920	HV3	12.54	62	85.5	230/460	2.5	8,30
	1800	145T	**EM3558T-BG**	1,526	HV3	13.31	45	86.5	230/460	2.9	8,30
	1800	145T	**EM3587T-BG**	1,885	HV3	12.54	62	86.5	230/460	2.9	8,30
	1200	184T	**EM3664T-BG**	2,307	HV3	15.24	123	88.5	230/460	3.15	8,30
3	3600	145T	**EM3559T-BG**	1,708	HV3	14.19	50	86.5	230/460	3.6	8,30
	3600	182T	**EM3660T-BG**	2,075	HV3	15.24	58	86.5	230/460	3.8	8,30
	1800	182T	**EM3611T-BG**	1,708	HV3	16.54	70	89.5	230/460	4.2	8,30
	1800	182T	**EM3661T-BG**	2,126	HV3	15.24	105	89.5	230/460	4.1	8,30
	1200	213T	**EM3704T-BG**	2,585	HV3	19.01	132	89.5	230/460	4.6	8,30
	1200	213T	**EM3764T-BG**	2,826	HV3	18.45	211	89.5	230/460	4.5	8,30
5	3600	184T	**EM3613T-BG**	1,935	HV3	16.54	74	88.5	230/460	5.9	8,30
	3600	184T	**EM3663T-BG**	2,491	HV3	15.24	99	88.5	230/460	5.8	8,30
	1800	184T	**EM3615T-BG**	1,838	HV3	18.04	93	89.5	230/460	6.7	8,30
	1800	184T	**EM3665T-BG**	2,169	HV3	15.24	115	89.5	230/460	6.6	8,30
	1200	215T	**EM3708T-BG**	2,873	HV3	19.76	154	89.5	230/460	7.3	8,30
	1200	215T	**EM3768T-BG**	3,232	HV3	18.45	198	89.5	230/460	7.4	8,30
7 1/2	3600	213T	**EM3709T-BG**	2,776	HV3	17.89	121	89.5	230/460	9	8,30
	3600	213T	**EM3769T-BG**	3,232	HV3	18.45	169	89.5	230/460	9	8,30
	1800	213T	**EM3710T-BG**	2,547	HV3	19.01	127	91.7	230/460	9.4	8,30
	1800	213T	**EM3770T-BG**	3,135	HV3	18.45	193	91.7	230/460	9.5	8,30
	1200	254T	**EM2276T-BG**	4,630	HV3	23.30	310	91	230/460	11	30
10	3600	215T	**EM3711T-BG**	2,809	HV3	17.89	118	90.2	230/460	11.8	8,30
	3600	215T	**EM3771T-BG**	3,302	HV3	18.45	164	90.2	230/460	11.8	8,30
	1800	215T	**EM3714T-BG**	2,829	HV3	20.51	165	91.7	230/460	12	8,30
	1800	215T	**EM3774T-BG**	3,066	HV3	18.45	232	91.7	230/460	12.2	8,30
	1200	256T	**EM2332T-BG**	5,223	HV3	23.30	322	91	230/460	14.1	8,30

(a) See notes on inside back flap. Cast iron frame

Red catalog number indicates **NEW** product.

*IP54 when drain fitting kit #HA5027A03 is installed in the weep holes (48 thru 256T frame motors only)

Super-E, three phase, TEFC, foot mounted, with internal Baldor-Reliance® Shaft Grounding Brush

Hp	RPM	NEMA Frame	Catalog Number	List Price	Disc. Sym.	"C" Dim.	Aprx. Wt. (lb)	Full Load Efficiency	Voltage	Full Load Amps	Notes (a)
Foot mounted (continued)											
15	3600	254T	**EM2394T-BG**	4,583	HV3	23.30	253	91	230/460	17.5	8,30
	1800	254T	**EM2333T-BG**	4,230	HV3	23.30	274	92.4	230/460	18.1	8,30
	1200	284T	**EM4100T-BG**	6,881	HV3	27.76	372	91.7	230/460	21	8,30
20	1800	256T	**EM2334T-BG**	5,037	HV3	23.30	290	93	230/460	24	8,30
	1200	286T	**EM4102T-BG**	8,999	HV3	27.76	406	91.7	230/460	27	8,30
25	1800	284T	**EM4103T-BG**	6,514	HV3	27.76	420	93.6	230/460	30	8,30
	1200	324T	**EM4111T-BG**	10,227	HV3	30.39	475	93	230/460	32	8,30
30	1800	286T	**EM4104T-BG**	7,636	HV3	27.76	437	93.6	230/460	38	8,30
40	1800	324T	**EM4110T-BG**	9,944	HV3	30.28	578	94.1	230/460	48	8,30
50	1800	326T	**EM4115T-BG**	10,810	HV3	30.28	641	94.5	230/460	58	8,30
C-Face, foot mounted											
1/2	1800	56C	**CEM3538-BG**	1,406	HV3	12.23	33	82.5	208-230/460	0.8	8
3/4	1800	56C	**CEM3542-BG**	1,451	HV3	12.23	37	84	208-230/460	1.1	8,12
1	1800	143TC	**CEM3546T-BG**	1,494	HV3	13.29	38	85.5	230/460	1.5	8,30
1 1/2	1800	145TC	**CEM3554T-BG**	1,540	HV3	13.29	41	86.5	230/460	2.2	8,30
2	1800	145TC	**CEM3558T-BG**	1,584	HV3	13.29	45	86.5	230/460	2.9	8,30
3	1800	182TC	**CEM3611T-BG**	1,826	HV3	16.55	70	89.5	230/460	4.2	8,30
5	1800	184TC	**CEM3615T-BG**	1,956	HV3	18.05	93	89.5	230/460	6.7	8,30

(a) See notes on inside back flap.
Cast iron frame
*IP54 when drain fitting kit #HA5027A03 is installed in the weep holes (48 thru 256T frame motors only)

Super-E®, three phase, ODP, foot mounted with internal Baldor-Reliance® Shaft Grounding Brush

1 thru 50 Hp

IP22

Features:

- Class H insulation for increased protection on inverter use
- Internal grounding brush for bearing current mitigation on DE retainer ring
- Designed for longevity with 3 year warranty
- Suitable for inverter use per NEMA MG1 Part 31.4.4.2

Applications:

- Fans
- Pumps
- Blowers
- Unit handling
- HVAC systems
- Variable speed applications
- General purpose applications

Hp	RPM	NEMA Frame	Catalog Number	List Price	Disc. Sym.	"C" Dim.	Aprx. Wt. (lb)	Full Load Efficiency	Voltage	Full Load Amps	Notes (a)
230/460 volt											
1	1800	143T	**EM3116T-BG**	1,444	HV3	11.12	38	85.5	230/460	1.6	8,30
1 1/2	1800	145T	**EM3154T-BG**	1,497	HV3	11.62	37	86.5	230/460	2.2	8,30
2	3600	143T	**EM3155T-BG**	1,456	HV3	11.62	43	85.5	230/460	2.5	8,30
	1800	145T	**EM3157T-BG**	1,584	HV3	12.12	43	86.5	230/460	2.9	8,30
3	3600	145T	**EM3158T-BG**	1,470	HV3	13.00	51	85.5	230/460	3.8	8,30
	1800	182T	**EM3211T-BG**	1,737	HV3	15.00	74	89.5	230/460	4.2	8,30
	1200	213T	**EM3305T-BG**	2,187	HV3	16.32	110	88.5	230/460	4.5	8,30
5	3600	182T	**EM3212T-BG**	1,632	HV3	13.62	63	86.5	230/460	6	8,30
	1800	184T	**EM3218T-BG**	1,872	HV3	16.50	92	89.5	230/460	6.6	8,30
	1200	215T	**EM3309T-BG**	2,753	HV3	17.45	141	89.5	230/460	7.4	8,30
7 1/2	3600	184T	**EM3219T-BG**	2,398	HV3	15.00	77	88.5	230/460	8.6	8,30
	1800	213T	**EM3311T-BG**	2,638	HV3	16.32	115	91	230/460	9.7	8,30
	1200	254T	**EM2506T-BG**	3,297	HV3	23.19	248	90.2	230/460	11	8,30
10	3600	213T	**EM3312T-BG**	2,735	HV3	16.32	121	89.5	230/460	12	8,30
	1800	215T	**EM3313T-BG**	3,117	HV3	17.45	129	91.7	230/460	12.5	8,30
	1200	256T	**EM2511T-BG**	4,159	HV3	23.19	255	91.7	230/460	14.3	8,30
15	3600	215T	**EM3314T-BG**	3,731	HV3	16.32	131	90.2	230/460	17.5	8,30
	1800	254T	**EM2513T-BG**	4,331	HV3	21.69	234	93	230/460	17.7	8,30
	1200	284T	**EM2524T-BG**	5,516	HV3	23.81	300	91.7	230/460	20.5	8,30
20	1800	256T	**EM2515T-BG**	4,709	HV3	21.69	228	93	230/460	23.5	8,30
	1200	286T	**EM2528T-BG**	6,606	HV3	23.81	321	92.4	230/460	27	8,30
25	1800	284T	**EM2531T-BG**	5,706	HV3	25.06	387	93.6	230/460	30	8,30
30	1800	286T	**EM2535T-BG**	6,193	HV3	25.06	341	94.1	230/460	35	8,30
40	1800	324T	**EM2539T-BG**	8,039	HV3	27.19	324	94.1	230/460	49	8,30
50	1800	326T	**EM2543T-BG**	8,808	HV3	27.69	497	94.5	230/460	57	8,30
575 volt											
3	1800	182T	**EM3211T-5BG**	1,737	HV3	15.00	74	89.5	575	3.3	8
5	1800	184T	**EM3218T-5BG**	1,872	HV3	16.50	92	89.5	575	5.3	8
7 1/2	1800	213T	**EM3311T-5BG**	2,638	HV3	16.32	120	91.7	575	7.6	8
10	1800	215T	**EM3313T-5BG**	3,117	HV3	17.45	132	91.7	575	10	8
15	1800	254T	**EM2513T-5BG**	4,331	HV3	23.19	250	93	575	14.2	8
20	1800	256T	**EM2515T-5BG**	4,709	HV3	23.19	250	93	575	19.1	8
25	1800	284T	**EM2531T-5BG**	5,706	HV3	25.00	388	93.6	575	24.5	8
30	1800	286T	**EM2535T-5BG**	6,193	HV3	23.81	378	94.1	575	29	8
40	1800	324T	**EM2539T-5BG**	8,039	HV3	27.19	400	94.1	575	40	8
50	1800	326T	**EM2543T-5BG**	8,808	HV3	27.69	525	94.5	575	46	8

(a) See notes on inside back flap.

NEW!

Super-E®, three phase, TEFC, C-Face, foot mounted, with internal AEGIS® Bearing Protection Ring

1 thru 100 Hp

AEGIS® SGR BEARING PROTECTION RING
AEGIS INSTALLED

IP44*

Features:

- Class H insulation for increased protection on inverter use
- Internal grounding ring for bearing current mitigation
- Designed for longevity with 3 year warranty
- Suitable for inverter use per NEMA MG1 Part 31.4.4.2

Applications:

- Fans
- Pumps
- Blowers
- Unit handling
- HVAC systems
- Variable speed applications
- General purpose applications

Hp	RPM	NEMA Frame	Catalog Number	List Price	Disc. Sym.	"C" Dim.	Aprx. Wt. (lb)	Full Load Efficiency	Voltage	Full Load Amps	Notes (a)
230/460 volt											
1	3600	56C	**CEM3545-G**	1,494	HV3	12.23	32	77	230/460	1.4	8, 12, 30
	1800	143TC	**CEM3546T-G**	1,711	HV3	13.29	30	85.5	230/460	1.5	8, 30
	1200	145TC	**CEM3556T-G**	1,915	HV3	13.29	43	82.5	230/460	1.8	8, 30
1 1/2	3600	143TC	**CEM3550T-G**	1,688	HV3	13.29	36	84	230/460	1.9	8, 30
	1800	145TC	**CEM3554T-G**	1,866	HV3	13.29	42	86.5	230/460	2.2	8, 30
	1200	182TC	**CEM3607T-G**	2,263	HV3	16.54	76	87.5	230/460	2.4	8, 30
2	3600	145TC	**CEM3555T-G**	1,820	HV3	13.29	46	85.5	230/460	2.5	8, 30
	1800	145TC	**CEM3558T-G**	1,956	HV3	14.17	42	86.5	230/460	2.9	8, 30
	1200	184TC	**CEM3614T-G**	2,353	HV3	18.05	94	88.5	230/460	3.5	8, 30
3	3600	145TC	**CEM3559T-G**	2,277	HV3	14.17	53	86.5	230/460	3.6	8, 30
		182TC	**CEM3610T-G**	2,420	HV3	15.16	50	86.5	230/460	3.6	8, 30
	1800	182TC	**CEM3611T-G**	2,075	HV3	16.55	74	89.5	230/460	4.2	8, 30
	1200	213TC	**CEM3704T-G**	3,073	HV3	19.76	135	89.5	230/460	4.6	8, 30
5	3600	184TC	**CEM3613T-G**	2,241	HV3	16.55	76	88.5	230/460	5.9	8, 30
	1800	184TC	**CEM3615T-G**	2,129	HV3	18.05	92	89.5	230/460	6.7	8, 30
	1200	215TC	**CEM3708T-G**	3,404	HV3	19.20	154	89.5	230/460	7.3	8, 30
7 1/2	3600	213TC	**CEM3709T-G**	3,292	HV3	18.63	133	89.5	230/460	9	8, 30
	1800	213TC	**CEM3710T-G**	3,028	HV3	19.76	129	91.7	230/460	9.4	8, 30
	1200	254TC	**CEM2276T-G**	6,142	HV3	23.30	281	91	230/460	11	8, 30
10	3600	215TC	**CEM3711T-G**	3,330	HV3	18.63	118	90.2	230/460	11.8	8, 30
	1800	215TC	**CEM3714T-G**	3,353	HV3	21.26	156	91.7	230/460	12	8, 30
	1200	256TC	**CEM2332T-G**	6,822	HV3	23.30	322	91	230/460	14.1	8, 30
15	3600	254TC	**CEM2394T-G**	6,086	HV3	23.78	239	91	230/460	17.5	8, 30
	1800	254TC	**CEM2333T-G**	5,681	HV3	23.78	270	92.4	230/460	18.1	8, 30
	1200	284TC	**CEM4100T-G**	9,070	HV3	27.76	369	91.7	230/460	21	8, 30
20	3600	256TC	**CEM4106T-G**	6,552	HV3	23.78	261	91	230/460	23	8, 30
	1800	256TC	**CEM2334T-G**	6,610	HV3	23.78	295	93	230/460	24	8, 30
	1200	286TC	**CEM4102T-G**	11,505	HV3	27.76	393	91.7	230/460	27	8, 30
25	3600	284TSC	**CEM4107T-G**	8,558	HV3	26.39	323	91.7	230/460	29	8, 30
	1800	284TC	**CEM4103T-G**	8,648	HV3	27.76	400	93.6	230/460	30	8, 30
	1200	324TC	**CEM4111T-G**	13,022	HV3	30.39	507	93	230/460	32	8, 30

(a) See notes on inside back flap.
Cast iron frame
*IP54 when drain fitting kit #HA5027A03 is installed in the weep holes (48 thru 256T frame motors only)
Red catalog number indicates **NEW** product.

NEW!

NEW!

Super-E®, three phase, TEFC, C-Face, foot mounted, with internal AEGIS® Bearing Protection Ring

Hp	RPM	NEMA Frame	Catalog Number	List Price	Disc. Sym.	"C" Dim.	Aprx. Wt. (lb)	Full Load Efficiency	Voltage	Full Load Amps	Notes (a)
230/460 volt (continued)											
30	3600	286TSC	**CEM4108T-G**	9,844	HV3	26.39	336	91.7	230/460	34	8, 30
	1800	286TC	**CEM4104T-G**	9,938	HV3	27.76	410	93.6	230/460	38	8, 30
	1200	326TC	**CEM4117T-G**	14,741	HV3	30.28	604	93	230/460	39	8, 30
40	3600	324TSC	**CEM4109T-G**	13,083	HV3	28.78	532	92.4	230/460	46	8, 30
	1800	324TC	**CEM4110T-G**	12,696	HV3	30.28	596	94.1	230/460	48	8, 30
50	3600	326TSC	**CEM4114T-G**	14,156	HV3	28.78	584	93	230/460	56	8, 30
	1800	326TC	**CEM4115T-G**	13,692	HV3	30.28	648	94.5	230/460	58	8, 30
60	3600	364TSC	**CEM4310T-G**	19,294	HV3	31.36	900	95	230/460	66.3	8, 30
	1800	364TC	**CEM4314T-G**	19,078	HV3	33.48	907	95	230/460	68	8, 30
75	3600	365TSC	**CEM4313T-G**	22,087	HV3	31.36	966	94.5	230/460	81.9	8, 30
	1800	365TC	**CEM4316T-G**	21,939	HV3	33.48	956	95.4	230/460	85.9	8, 30
100	1800	405TC	**CEM4400T-G**	29,877	HV3	38.20	1214	95.4	230/460	112	8, 30

(a) See notes on inside back flap.:
Cast iron frame
*IP54 when drain fitting kit #HA5027A03 is installed in the weep holes (48 thru 256T frame motors only)
Red catalog number indicates **NEW** product.

Super-E®, three phase, TEFC, foot mounted, with internal AEGIS® Bearing Protection Ring

1 thru 100 Hp

AEGIS INSTALLED

IP44*

Features:

- Class H insulation for increased protection on inverter use
- Internal grounding ring for bearing current mitigation on DE retainer ring
- Designed for longevity with 3 year warranty
- Suitable for inverter use per NEMA MG1 Part 31.4.4.2

Applications:

- Fans
- Pumps
- Blowers
- Unit handling
- HVAC systems
- Variable speed applications
- General purpose applications

Hp	RPM	NEMA Frame	Catalog Number	List Price	Disc. Sym.	"C" Dim.	Aprx. Wt. (lb)	Full Load Efficiency	Voltage	Full Load Amps	Notes (a)
230/460 volt											
1	3600	56	**EM3545-G**	1,311	HV3	12.23	32	77	230/460	1.4	8,12, 30
	1800	143T	**EM3546T-G**	1,436	HV3	12.31	30	85.5	230/460	1.5	8,30
	1800	143T	**EM3581T-G**	1,754	HV3	12.54	55	85.5	230/460	1.5	8,30
	1200	145T	**EM3556T-G**	1,666	HV3	13.31	43	82.5	230/460	1.8	8,30
	1200	145T	**EM3582T-G**	1,935	HV3	12.54	56	82.5	230/460	1.7	8,30
1 1/2	3600	143T	**EM3550T-G**	1,469	HV3	12.29	36	84	230/460	1.9	8,30
	3600	143T	**EM3583T-G**	1,841	HV3	12.54	56	84	230/460	1.9	8,30
	1800	145T	**EM3554T-G**	1,482	HV3	13.31	42	86.5	230/460	2.2	8,30
	1800	145T	**EM3584T-G**	1,810	HV3	12.54	61	86.5	230/460	2.3	8,30
	1200	182T	**EM3607T-G**	1,953	HV3	16.54	76	87.5	230/460	2.4	8,30
	1200	182T	**EM3667T-G**	2,274	HV3	15.24	99	87.5	230/460	2.5	8
2	3600	145T	**EM3555T-G**	1,582	HV3	13.29	46	85.5	230/460	2.5	8,30
	3600	145T	**EM3586T-G**	1,920	HV3	12.54	62	85.5	230/460	2.5	8,30
	1800	145T	**EM3558T-G**	1,526	HV3	13.31	42	86.5	230/460	2.9	8,30
	1800	145T	**EM3587T-G**	1,885	HV3	12.54	62	86.5	230/460	2.9	8,30
	1200	184T	**EM3614T-G**	2,032	HV3	18.04	94	88.5	230/460	3.5	8,30
	1200	184T	**EM3664T-G**	2,307	HV3	15.24	123	88.5	230/460	3.15	8,30
3	3600	145T	**EM3559T-G**	1,708	HV3	14.17	53	86.5	230/460	3.6	8,30
	3600	182T	**EM3610T-G**	1,777	HV3	15.29	57	86.5	230/460	3.6	8,30
	3600	182T	**EM3660T-G**	2,075	HV3	15.24	58	86.5	230/460	3.8	8,30
	1800	182T	**EM3611T-G**	1,708	HV3	16.54	74	89.5	230/460	4.2	8,30
	1800	182T	**EM3661T-G**	2,126	HV3	15.24	105	89.5	230/460	4.1	8,30
	1200	213T	**EM3704T-G**	2,585	HV3	19.01	135	89.5	230/460	4.6	8,30
	1200	213T	**EM3764T-G**	2,826	HV3	18.45	211	89.5	230/460	4.5	8,30
5	3600	184T	**EM3613T-G**	1,935	HV3	16.54	76	88.5	230/460	5.9	8,30
	3600	184T	**EM3663T-G**	2,491	HV3	15.24	99	88.5	230/460	5.8	8,30
	1800	184T	**EM3615T-G**	1,838	HV3	18.04	92	89.5	230/460	6.7	8,30
	1800	184T	**EM3665T-G**	2,169	HV3	15.24	115	89.5	230/460	6.6	8,30
	1200	215T	**EM3708T-G**	2,873	HV3	19.76	154	89.5	230/460	7.3	8,30
	1200	215T	**EM3768T-G**	3,232	HV3	18.45	198	89.5	230/460	7.4	8,30
7 1/2	3600	213T	**EM3709T-G**	2,776	HV3	17.89	133	89.5	230/460	9	8,30
	3600	213T	**EM3769T-G**	3,232	HV3	18.45	169	89.5	230/460	9	8,30
	1800	213T	**EM3710T-G**	2,547	HV3	19.01	129	91.7	230/460	9.4	8,30
	1800	213T	**EM3770T-G**	3,168	HV3	18.45	193	91.7	230/460	9.5	8,30
	1200	254T	**EM2276T-G**	4,680	HV3	23.30	281	91	230/460	11	8,30

(a) See notes on inside back flap.
Cast iron frame
Red catalog number indicates **NEW** product.
*IP54 when drain fitting kit #HA5027A03 is installed in the weep holes (48 thru 256T frame motors only)

Super-E®, three phase, TEFC, foot mounted, with internal AEGIS® Bearing Protection Ring

Hp	RPM	NEMA Frame	Catalog Number	List Price	Disc. Sym.	"C" Dim.	Aprx. Wt. (lb)	Full Load Efficiency	Voltage	Full Load Amps	Notes (a)
230/460 volt (continued)											
10	3600	215T	**EM3711T-G**	2,809	HV3	17.89	118	90.2	230/460	11.8	8,30
	3600	215T	**EM3771T-G**	3,351	HV3	18.45	164	90.2	230/460	11.8	8,30
	1800	215T	**EM3714T-G**	2,829	HV3	20.51	156	91.7	230/460	12	8,30
	1800	215T	**EM3774T-G**	3,140	HV3	18.45	232	91.7	230/460	12.2	8
	1200	256T	**EM2332T-G**	5,273	HV3	23.30	322	91	230/460	14.1	8,30
15	3600	254T	**EM2394T-G**	4,632	HV3	23.30	239	91	230/460	17.5	8,30
	1800	254T	**EM2333T-G**	4,280	HV3	23.30	270	92.4	230/460	18.1	8,30
	1200	284T	**EM4100T-G**	7,010	HV3	27.76	369	91.7	230/460	21	8,30
20	3600	256T	**EM4106T-G**	5,037	HV3	23.30	261	91	230/460	23	8,30
	1800	256T	**EM2334T-G**	5,087	HV3	23.30	295	93	230/460	24	8,30
	1200	286T	**EM4102T-G**	9,127	HV3	27.76	393	91.7	230/460	27	8,30
25	3600	284TS	**EM4107T-G**	6,564	HV3	24.70	323	91.7	230/460	29	8,30
	1800	284T	**EM4103T-G**	6,643	HV3	27.76	400	93.6	230/460	30	8,30
	1200	324T	**EM4111T-G**	10,376	HV3	30.39	507	93	230/460	32	8,30
30	3600	286TS	**EM4108T-G**	7,682	HV3	24.70	336	91.7	230/460	34	8,30
	1800	286T	**EM4104T-G**	7,764	HV3	27.76	410	93.6	230/460	38	8,30
	1200	326T	**EM4117T-G**	11,871	HV3	30.28	604	93	230/460	39	8,30
40	3600	324TS	**EM4109T-G**	10,428	HV3	28.78	532	92.4	230/460	46	8,30
	1800	324T	**EM4110T-G**	10,092	HV3	30.28	596	94.1	230/460	48	8,30
	1200	364T	**EM4308T-G**	15,139	HV3	33.48	883	94.1	230/460	49.4	8,30
50	3600	326TS	**EM4114T-G**	11,337	HV3	28.78	584	93	230/460	56	8,30
	1800	326T	**EM4115T-G**	10,959	HV3	30.28	648	94.5	230/460	58	8,30
	1200	365T	**EM4312T-G**	18,171	HV3	33.48	910	94.1	230/460	61.7	8,30
60	3600	364TS	**EM4310T-G**	16,208	HV3	31.36	900	95	230/460	66.3	8,30
	1800	364T	**EM4314T-G**	16,012	HV3	33.48	907	95	230/460	68	8,30
75	3600	365TS	**EM4313T-G**	18,759	HV3	31.36	966	94.5	230/460	81.9	8,30
	1800	365T	**EM4316T-G**	18,624	HV3	33.48	956	95.4	230/460	85.9	8,30
100	1800	405T	**EM4400T-G**	23,304	HV3	38.20	1214	95.4	230/460	112	8,30
200 volt											
5	1800	184T	**EM3665T-8G**	2,223	HV3	15.23	119	89.5	200	15.1	8
7 1/2	1800	213T	**EM3770T-8G**	2,841	HV3	18.45	170	91.7	200	21.4	8
10	1800	215T	**EM3774T-8G**	3,142	HV3	18.45	231	91.7	200	28	8
15	1800	254T	**EM2333T-8G**	4,280	HV3	23.30	254	92.4	200	42.4	8
575 volt											
1	1800	143T	**EM3546T-5G**	1,436	HV3	12.31	35	85.5	575	1.2	8
1 1/2	1800	145T	**EM3554T-5G**	1,482	HV3	13.31	42	86.5	575	1.8	8
2	1800	145T	**EM3558T-5G**	1,526	HV3	13.31	46	86.5	575	2.3	8
3	1800	182T	**EM3611T-5G**	1,708	HV3	16.54	76	89.5	575	3.3	8
5	1800	184T	**EM3615T-5G**	1,838	HV3	18.04	84	89.5	575	5.3	8
7 1/2	1800	213T	**EM3710T-5G**	2,547	HV3	19.01	126	91.7	575	7.6	8
10	1800	215T	**EM3714T-5G**	2,829	HV3	20.51	165	91.7	575	9.6	8
15	1800	254T	**EM2333T-5G**	4,280	HV3	23.30	250	92.4	575	14.6	8
20	1800	256T	**EM2334T-5G**	5,087	HV3	23.30	293	93	575	19.2	8
25	1800	284T	**EM4103T-5G**	6,643	HV3	27.76	364	93.6	575	24	8
30	1800	286T	**EM4104T-5G**	7,764	HV3	27.76	423	93.6	575	29	8
40	1800	324T	**EM4110T-5G**	10,092	HV3	30.28	576	94.1	575	39	8
50	1800	326T	**EM4115T-5G**	10,959	HV3	30.28	644	94.5	575	46	8

(a) See notes on inside back flap.
Cast iron frame
Red catalog number indicates **NEW** product.
*IP54 when drain fitting kit #HA5027A03 is installed in the weep holes (48 thru 256T frame motors only)

NEW!

Super-E, three phase, ODP, C-Face, foot mounted, with internal AEGIS® Bearing Protection Ring

1 thru 100 Hp

AEGIS SGR BEARING PROTECTION RING
AEGIS INSTALLED

IP22

Features:

- Class H insulation for increased protection on inverter use
- Internal grounding ring for bearing current mitigation
- Designed for longevity with 3 year warranty
- Suitable for inverter use per NEMA MG1 Part 31.4.4.2

Applications:

- Fans
- Pumps
- Blowers
- Unit handling
- HVAC systems
- Variable speed applications
- General purpose applications

Hp	RPM	NEMA Frame	Catalog Number	List Price	Disc. Sym.	"C" Dim.	Aprx. Wt. (lb)	Full Load Efficiency	Voltage	Full Load Amps	Notes (a)
230/460 volt											
1	3600	56C	**CEM31115-G**	1,317	HV3	11.75	37	78.5	230/460	1.6	8, 12, 15, 30
	1800	143TC	**CEM3116T-G**	1,597	HV3	11.12	34	85.5	230/460	1.5	8, 30
	1200	145TC	**CEM3156T-G**	1,627	HV3	11.62	40	82.5	230/460	1.8	8, 30
1 1/2	3600	143TC	**CEM3120T-G**	1,410	HV3	11.12	34	84	230/460	2	8, 30
	1800	145TC	**CEM3154T-G**	1,657	HV3	11.62	38	86.5	230/460	2.2	8, 30
	1200	182TC	**CEM3207T-G**	1,882	HV3	15.00	67	86.5	230/460	2.5	8, 30
2	3600	143TC	**CEM3155T-G**	1,610	HV3	11.62	41	85.5	230/460	2.5	8, 30
	1800	145TC	**CEM3157T-G**	1,759	HV3	12.12	41	86.5	230/460	2.9	8, 30
	1200	184TC	**CEM3215T-G**	1,918	HV3	16.50	79	87.5	230/460	3.4	8, 30
3	3600	145TC	**CEM3158T-G**	1,627	HV3	13.00	51	85.5	230/460	3.8	8, 30
	1800	182TC	**CEM3211T-G**	1,895	HV3	15.00	72	89.5	230/460	4.2	8, 30
	1200	213TC	**CEM3305T-G**	2,384	HV3	16.32	131	88.5	230/460	4.5	8, 30
5	3600	182TC	**CEM3212T-G**	1,773	HV3	13.62	63	86.5	230/460	6	8, 30
	1800	184TC	**CEM3218T-G**	2,050	HV3	16.50	84	89.5	230/460	6.6	8, 30
	1200	215TC	**CEM3309T-G**	3,036	HV3	17.45	141	89.5	230/460	7.4	8, 30
7 1/2	3600	184TC	**CEM3219T-G**	2,654	HV3	15.00	75	88.5	230/460	8.6	8, 30
	1800	213TC	**CEM3311T-G**	2,905	HV3	16.32	130	91	230/460	9.7	8, 30
	1200	254TC	**CEM2506T-G**	3,647	HV3	23.19	243	90.2	230/460	11	8, 30
10	3600	213TC	**CEM3312T-G**	3,015	HV3	16.32	121	89.5	230/460	12	8, 30
	1800	215TC	**CEM3313T-G**	3,455	HV3	17.45	148	91.7	230/460	12.5	8, 30
	1200	256TC	**CEM2511T-G**	4,640	HV3	23.19	255	91.7	230/460	14.3	8, 30
15	3600	215TC	**CEM3314T-G**	4,161	HV3	16.32	131	90.2	230/460	17.5	8, 30
	1800	254TC	**CEM2513T-G**	4,836	HV3	21.69	251	93	230/460	17.7	8, 30
	1200	284TC	**CEM2524T-G**	6,226	HV3	23.81	280	91.7	230/460	20.5	8, 30
20	3600	254TC	**CEM2514T-G**	4,904	HV3	21.69	185	91	230/460	23.5	8, 30
	1800	256TC	**CEM2515T-G**	5,273	HV3	21.69	250	93	230/460	24	8, 30
	1200	286TC	**CEM2528T-G**	7,479	HV3	23.81	299	92.4	230/460	27	8, 30
25	3600	256TC	**CEM2516T-G**	7,002	HV3	21.69	233	91.7	230/460	28	8, 30
	1800	284TC	**CEM2531T-G**	7,746	HV3	25.06	314	93.6	230/460	30	8, 30
	1200	324TC	**CEM2532T-G**	8,976	HV3	27.69	384	93	230/460	34	8, 30
30	3600	284TSC	**CEM2534T-G**	6,895	HV3	22.44	320	91.7	230/460	35	8, 30
	1800	286TC	**CEM2535T-G**	8,429	HV3	25.06	340	94.1	230/460	35	8, 30
	1200	326TC	**CEM2536T-G**	9,342	HV3	28.69	457	93.6	230/460	38	8, 30
40	3600	286TSC	**CEM2538T-G**	8,752	HV3	22.44	328	92.4	230/460	46	8, 30
	1800	324TC	**CEM2539T-G**	9,035	HV3	27.19	392	94.1	230/460	49	8, 30

(a) See notes on inside back flap.
Red catalog number indicates **NEW** product.

NEW!

NEW!

Super-E®, three phase, ODP, C-Face, foot mounted, with internal AEGIS® Bearing Protection Ring

Hp	RPM	NEMA Frame	Catalog Number	List Price	Disc. Sym.	"C" Dim.	Aprx. Wt. (lb)	Full Load Efficiency	Voltage	Full Load Amps	Notes (a)
230/460 volt (continued)											
50	3600	324TSC	**CEM2542T-G**	9,526	HV3	25.69	392	93	230/460	56	8, 30
	1800	326TC	**CEM2543T-G**	9,920	HV3	27.69	497	94.5	230/460	57	8, 30
60	3600	326TSC	**CEM2546T-G**	11,927	HV3	30.69	616	95	230/460	68	8, 30
	1800	364TC	**CEM2547T-G**	12,772	HV3	30.69	565	95	230/460	68	8, 30
75	3600	364TSC	**CEM2549T-G**	15,899	HV3	33.72	750	95	230/460	87	8, 30
	1800	365TC	**CEM2551T-G**	15,474	HV3	33.72	597	95	230/460	85	8, 30
100	3600	365TSC	**CEM2550T-4G**	22,069	HV3	36.97	898	95.4	460	115	8, 30
	1800	404TC	**CEM2555T-4G**	22,390	HV3	36.97	898	95.4	460	115	8, 30

(a) See notes on inside back flap.
Red catalog number indicates **NEW** product.

Super-E, three phase, ODP, foot mounted, with internal AEGIS® Bearing Protection Ring

1 thru 100 Hp

AEGIS® SGR BEARING PROTECTION RING
AEGIS INSTALLED

IP22

Features:

- Class H insulation for increased protection on inverter use
- Internal grounding ring for bearing current mitigation on DE retainer ring
- Designed for longevity with 3 year warranty
- Suitable for inverter use per NEMA MG1 Part 31.4.4.2

Applications:

- Fans
- Pumps
- Blowers
- Unit handling
- HVAC systems
- Variable speed applications
- General purpose applications

Hp	RPM	NEMA Frame	Catalog Number	List Price	Disc. Sym.	"C" Dim.	Aprx. Wt. (lb)	Full Load Efficiency	Voltage	Full Load Amps	Notes (a)
230/460 volt											
1	3600	56	**EM31115-G**	1,158	HV3	11.75	27	77	230/460	1.6	8, 12, 15, 30
	1800	143T	**EM3116T-G**	1,444	HV3	11.12	34	85.5	230/460	1.5	8, 30
	1200	145T	**EM3156T-G**	1,470	HV3	11.62	40	82.5	230/460	1.8	8, 30
1 1/2	3600	143T	**EM3120T-G**	1,281	HV3	11.12	34	84	230/460	2	8, 30
	1800	145T	**EM3154T-G**	1,497	HV3	11.62	38	86.5	230/460	2.2	8, 30
	1200	182T	**EM3207T-G**	1,726	HV3	15.00	67	86.5	230/460	2.5	8, 30
2	3600	143T	**EM3155T-G**	1,456	HV3	11.62	41	85.5	230/460	2.5	8, 30
	1800	145T	**EM3157T-G**	1,584	HV3	12.12	41	86.5	230/460	2.9	8, 30
	1200	184T	**EM3215T-G**	1,757	HV3	16.50	79	87.5	230/460	3.4	8, 30
3	3600	145T	**EM3158T-G**	1,470	HV3	13.00	46	85.5	230/460	3.8	8, 30
	1800	182T	**EM3211T-G**	1,737	HV3	15.00	72	89.5	230/460	4.2	8, 30
	1200	213T	**EM3305T-G**	2,187	HV3	16.32	110	88.5	230/460	4.5	8, 30
5	3600	182T	**EM3212T-G**	1,632	HV3	13.62	63	86.5	230/460	6	8, 30
	1800	184T	**EM3218T-G**	1,872	HV3	16.50	84	89.5	230/460	6.6	8, 30
	1200	215T	**EM3309T-G**	2,753	HV3	17.45	141	89.5	230/460	7.4	8, 30
7 1/2	3600	184T	**EM3219T-G**	2,398	HV3	15.00	75	88.5	230/460	8.6	8, 30
	1800	213T	**EM3311T-G**	2,638	HV3	16.32	115	91	230/460	9.7	8, 30
	1200	254T	**EM2506T-G**	3,346	HV3	23.19	243	90.2	230/460	11	8, 30
10	3600	213T	**EM3312T-G**	2,735	HV3	16.32	113	89.5	230/460	12	8, 30
	1800	215T	**EM3313T-G**	3,117	HV3	17.45	127	91.7	230/460	12.5	8, 30
	1200	256T	**EM2511T-G**	4,209	HV3	23.19	255	91.7	230/460	14.3	8, 30
15	3600	215T	**EM3314T-G**	3,731	HV3	16.32	126	90.2	230/460	17.5	8, 30
	1800	254T	**EM2513T-G**	4,380	HV3	21.69	210	93	230/460	17.7	8, 30
	1200	284T	**EM2524T-G**	5,645	HV3	23.81	280	91.7	230/460	20.5	8, 30
20	3600	254T	**EM2514T-G**	4,438	HV3	21.69	195	91	230/460	23.5	8, 30
	1800	256T	**EM2515T-G**	4,759	HV3	21.69	227	93	230/460	23.5	8, 30
	1200	286T	**EM2528T-G**	6,735	HV3	23.81	299	92.4	230/460	27	8, 30
25	3600	256T	**EM2516T-G**	5,231	HV3	21.69	212	91.7	230/460	28	8, 30
	1800	284T	**EM2531T-G**	5,834	HV3	25.06	314	93.6	230/460	30	8, 30
	1200	324T	**EM2532T-G**	8,136	HV3	27.69	384	93	230/460	34	8, 30
30	3600	284TS	**EM2534T-G**	6,226	HV3	22.44	310	91.7	230/460	35	8, 30
	1800	286T	**EM2535T-G**	6,322	HV3	25.06	340	94.1	230/460	35	8, 30
	1200	326T	**EM2536T-G**	8,454	HV3	28.69	457	93.6	230/460	38	8, 30
40	3600	286TS	**EM2538T-G**	7,841	HV3	22.44	328	92.4	230/460	46	8, 30
	1800	324T	**EM2539T-G**	8,187	HV3	27.19	392	94.1	230/460	49	8, 30
	1200	364T	**EM2540T-G**	11,807	HV3	30.69	606	94.1	230/460	51	8, 30
50	3600	324TS	**EM2542T-G**	8,615	HV3	25.69	392	93	230/460	56	8, 30
	1800	326T	**EM2543T-G**	8,956	HV3	27.69	473	94.5	230/460	57	8, 30

(a) See notes on inside back flap.

Super-E®, three phase, ODP, foot mounted, with internal AEGIS® Bearing Protection Ring

Hp	RPM	NEMA Frame	Catalog Number	List Price	Disc. Sym.	"C" Dim.	Aprx. Wt. (lb)	Full Load Efficiency	Voltage	Full Load Amps	Notes (a)
230/460 volt (continued)											
60	1800	364T	**EM2547T-G**	11,719	HV3	30.69	616	95	230/460	68	8, 30
75	1800	365T	**EM2551T-G**	14,067	HV3	33.72	750	95	230/460	87	8, 30
100	1800	404T	**EM2555T-4G**	16,727	HV3	36.97	898	95.4	460	115	8
200 volt											
1	1800	143T	**EM3116T-8G**	1,444	HV3	11.12	38	85.5	200	3.5	8
1 1/2	1800	145T	**EM3154T-8G**	1,497	HV3	11.62	37	86.5	200	5.1	8
2	1800	145T	**EM3157T-8G**	1,584	HV3	12.12	43	86.5	200	6.5	8
3	1800	182T	**EM3211T-8G**	1,737	HV3	15.00	74	89.5	200	9.7	8
5	1800	184T	**EM3218T-8G**	1,872	HV3	16.50	92	89.5	200	15.3	8
7 1/2	1800	213T	**EM3311T-8G**	2,638	HV3	16.32	120	91	200	22.2	8
10	1800	215T	**EM3313T-8G**	3,117	HV3	17.45	132	91.7	200	29.5	8
15	1800	254T	**EM2513T-8G**	4,380	HV3	21.69	234	93	200	40.7	8
20	1800	256T	**EM2515T-8G**	4,759	HV3	21.69	250	93	200	54.3	8
25	1800	284T	**EM2531T-8G**	5,834	HV3	25.06	330	93.6	200	70	8
30	1800	286T	**EM2535T-8G**	6,322	HV3	25.06	340	94.1	200	81	8
40	1800	324T	**EM2539T-8G**	8,187	HV3	27.19	390	94.1	200	109	8
575 volt											
1	1800	143T	**EM3116T-5G**	1,444	HV3	11.12	38	85.5	575	1.2	8
1 1/2	1800	145T	**EM3154T-5G**	1,497	HV3	11.62	37	86.5	575	1.8	8
2	1800	145T	**EM3157T-5G**	1,584	HV3	12.12	43	86.5	575	2.3	8
3	1800	182T	**EM3211T-5G**	1,737	HV3	15.00	74	89.5	575	3.4	8
5	1800	184T	**EM3218T-5G**	1,872	HV3	16.50	92	89.5	575	5.3	8
7 1/2	1800	213T	**EM3311T-5G**	2,638	HV3	16.32	114	91	575	7.8	8
10	1800	215T	**EM3313T-5G**	3,117	HV3	17.45	132	91.7	575	10	8
15	1800	254T	**EM2513T-5G**	4,380	HV3	21.69	210	93	575	14.1	8
20	1800	256T	**EM2515T-5G**	4,759	HV3	21.69	250	93	575	18.9	8
25	1800	284T	**EM2531T-5G**	5,834	HV3	25.06	328	93.6	575	24.5	8
30	1800	286T	**EM2535T-5G**	6,322	HV3	25.06	340	94.1	575	28	8
40	1800	324T	**EM2539T-5G**	8,187	HV3	27.19	400	94.1	575	40	8

(a) See notes on inside back flap.

Super-E®, three phase, ODP, foot mounted

1 thru 100 Hp

IP22

Features:

- External provisions for bearing current mitigation
- Designed for longevity with 3 year warranty
- Suitable for inverter use per NEMA MG1 Part 31.4.4.2

Applications:

- Fans
- Pumps
- Blowers
- Air handling
- HVAC systems
- Variable speed applications
- General purpose applications

Hp	RPM	NEMA Frame	Catalog Number	List Price	Disc. Sym.	"C" Dim.	Aprx. Wt. (lb)	Full Load Efficiency	Voltage	Full Load Amps	Notes (a)
230/460 volt											
1	1800	143T	**EHM3116T**	952	HV3	11.12	35	85.5	230/460	1.5	30
1 1/2	1800	145T	**EHM3154T**	988	HV3	11.62	37	86.5	230/460	2.2	30
2	1800	145T	**EHM3157T**	1,062	HV3	12.13	41	86.5	230/460	2.9	30
3	1800	182T	**EHM3211T**	1,139	HV3	15.00	72	89.5	230/460	4.2	30
	1200	213T	**EHM3305T**	1,879	HV3	16.32	114	88.5	230/460	4.5	30
5	1800	184T	**EHM3218T**	1,237	HV3	16.50	85	89.5	230/460	6.6	30
	1200	215T	**EHM3309T**	2,445	HV3	17.45	141	89.5	230/460	7.4	30
7 1/2	1800	213T	**EHM3311T**	1,798	HV3	16.32	115	91	230/460	9.7	30
	1200	254T	**EHM2506T**	2,920	HV3	23.19	248	90.2	230/460	11	30
10	1800	215T	**EHM3313T**	2,164	HV3	17.45	127	91.7	230/460	12.5	30
	1200	256T	**EHM2511T**	3,782	HV3	23.19	260	91.7	230/460	14.3	30
15	1800	254T	**EHM2523T**	3,051	HV3	21.69	212	93	230/460	17.7	30
	1200	284T	**EHM2524T**	5,080	HV3	23.81	285	91.7	230/460	20.5	30
20	1800	256T	**EHM2515T**	3,817	HV3	21.69	225	93	230/460	23.5	30
	1200	286T	**EHM2528T**	6,170	HV3	23.81	375	92.4	230/460	27	30
25	1800	284T	**EHM2531T**	4,644	HV3	25.06	345	93.6	230/460	30	30
	1200	324T	**EHM2532T**	7,441	HV3	27.69	393	93	230/460	34	30
30	1800	286T	**EHM2535T**	6,605	HV3	25.06	339	94.1	230/460	35	30
	1200	326T	**EHM2536T**	7,759	HV3	28.69	482	93.6	230/460	38	30
40	1800	324T	**EHM2539T**	7,441	HV3	27.19	433	94.1	230/460	49	30
50	1800	326T	**EHM2543T**	8,102	HV3	27.69	469	94.5	230/460	57	30
60	1800	364T	**EHM2547T**	9,160	HV3	29.94	582	95	230/460	68	30
75	1800	365T	**EHM2551T**	11,234	HV3	33.72	752	95	230/460	87	30
100	1800	404T	**EHM2555T**	12,804	HV3	36.97	911	95.4	230/460	113	30
230/460 volt, F2 mounting											
2	1800	145T	**EHFM3157T**	1,062	HV3	12.13	49	86.5	230/460	2.9	30
3	1800	182T	**EHFM3211T**	1,139	HV3	15.00	68	89.5	230/460	4.2	30
5	1800	184T	**EHFM3218T**	1,798	HV3	16.50	82	89.5	230/460	6.6	30
7 1/2	1800	213T	**EHFM3311T**	2,164	HV3	16.32	115	91	230/460	9.7	30
10	1800	215T	**EHFM3313T**	2,437	HV3	17.45	127	91.7	230/460	12.5	30
15	1800	254T	**EHFM2523T**	3,051	HV3	21.69	212	93	230/460	17.7	30
20	1800	256T	**EHFM2515T**	3,817	HV3	21.69	227	93	230/460	23.5	30
25	1800	284T	**EHFM2531T**	4,644	HV3	25.06	301	93.6	230/460	30	30
30	1800	286T	**EHFM2535T**	5,075	HV3	25.06	328	94.1	230/460	35	30
40	1800	324T	**EHFM2539T**	6,605	HV3	27.19	429	94.1	230/460	49	30
50	1800	326T	**EHFM2543T**	8,102	HV3	27.69	466	94.5	230/460	57	30

(a) See notes on inside back flap.

Super-E, three phase, ODP, foot mounted

Hp	RPM	NEMA Frame	Catalog Number	List Price	Disc. Sym.	"C" Dim.	Aprx. Wt. (lb)	Full Load Efficiency	Voltage	Full Load Amps	Notes (a)
200 volt											
1	1800	143T	**EHM3116T-8**	952	HV3	11.12	34	85.5	200	3.5	
1 1/2	1800	145T	**EHM3154T-8**	988	HV3	11.62	38	86.5	200	5.1	
2	1800	145T	**EHM3157T-8**	1,062	HV3	12.13	41	86.5	200	6.5	
3	1800	182T	**EHM3211T-8**	1,139	HV3	15.00	71	89.5	200	9.7	
5	1800	184T	**EHM3218T-8**	1,237	HV3	16.50	85	89.5	200	15.3	
7 1/2	1800	213T	**EHM3311T-8**	1,798	HV3	16.32	115	91	200	22.2	
10	1800	215T	**EHM3313T-8**	2,164	HV3	17.45	120	91.7	200	29.5	30
15	1800	254T	**EHFM2523T-8**	3,043	HV3	21.69	211	93	200	40.7	6, 30
		254T	**EHM2523T-8**	3,051	HV3	21.69	210	93	200	40.7	30
20	1800	256T	**EHM2515T-8**	3,817	HV3	21.69	226	93	200	54.3	30
25	1800	284T	**EHM2531T-8**	4,644	HV3	25.06	369	93.6	200	70	
30	1800	286T	**EHM2535T-8**	5,075	HV3	25.06	331	94.1	200	81	
40	1800	324T	**EHM2539T-8**	6,605	HV3	26.69	434	94.1	200	108	
50	1800	326T	**EHM2543T-8**	8,102	HV3	27.69	459	94.5	200	132	

(a) See notes on inside back flap.

Super-E®, three phase, TEFC, foot mounted

1 thru 50 Hp

IP44*

Features:

- External provisions for bearing current mitigation
- Designed for longevity with 3 year warranty
- Suitable for inverter use per NEMA MG1 Part 31.4.4.2

Applications:

- Fans
- Pumps
- Blowers
- Air handling
- HVAC systems
- General purpose applications

Hp	RPM	NEMA Frame	Catalog Number	List Price	Disc. Sym.	"C" Dim.	Aprx. Wt. (lb)	Full Load Efficiency	Voltage	Full Load Amps	Notes (a)
230/460 volt											
1	1800	143T	**EHM3546T**	1,074	HV3	12.31	37	85.5	230/460	1.5	1, 30
1 1/2	1800	145T	**EHM3554T**	1,079	HV3	13.29	44	86.5	230/460	2.2	1, 30
2	1800	145T	**EHM3558T**	1,154	HV3	13.29	46	86.5	230/460	2.9	1, 30
3	1800	182T	**EHM3611T**	1,271	HV3	16.54	73	89.5	230/460	4.2	1, 30
5	1800	184T	**EHM3615T**	1,388	HV3	18.04	93	89.5	230/460	6.7	1, 30
	1200	215T	**EHM3708T**	2,566	HV3	19.78	154	89.5	230/460	7.3	1, 30
7 1/2	1800	213T	**EHM3710T**	1,978	HV3	19.03	128	91.7	230/460	9.4	1, 30
	1200	254T	**EHM2276T**	4,253	HV3	23.28	294	91	230/460	11	1, 30
10	1800	215T	**EHM3714T**	2,231	HV3	20.53	165	91.7	230/460	12	1, 30
	1200	256T	**EHM2332T**	4,846	HV3	23.28	290	91	230/460	14.1	1, 30
15	1800	254T	**EHM2333T**	3,409	HV3	23.28	250	92.4	230/460	18.1	1, 30
	1200	284T	**EHM4100T**	6,445	HV3	27.76	400	91.7	230/460	21	1, 30
20	1800	256T	**EHM2334T**	4,123	HV3	23.28	288	93	230/460	24	1, 30
	1200	286T	**EHM4102T**	8,564	HV3	27.76	457	91.7	230/460	27	1, 30
25	1800	284T	**EHM4103T**	5,378	HV3	27.76	430	93.6	230/460	30	1, 30
	1200	324T	**EHM4111T**	9,681	HV3	30.39	465	93	230/460	32	1, 30
30	1800	286T	**EHM4104T**	6,373	HV3	27.76	423	93.6	230/460	38	1, 30
40	1800	324T	**EHM4110T**	8,317	HV3	30.28	612	94.1	230/460	48	1, 30
50	1800	326T	**EHM4115T**	9,058	HV3	30.28	622	94.5	230/460	58	1, 30
575 volt											
1	1800	143T	**EHM3546T-5**	1,074	HV3	12.31	37	85.5	575	1.2	1
1 1/2	1800	145T	**EHM3554T-5**	1,079	HV3	13.29	44	86.5	575	1.8	1
2	1800	145T	**EHM3558T-5**	1,154	HV3	13.29	47	86.5	575	2.3	1
3	1800	182T	**EHM3611T-5**	1,271	HV3	16.54	74	89.5	575	3.3	1
5	1800	184T	**EHM3615T-5**	1,388	HV3	18.04	92	89.5	575	5.3	1
7 1/2	1800	213T	**EHM3710T-5**	1,978	HV3	19.03	127	91.7	575	7.6	1
10	1800	215T	**EHM3714T-5**	2,231	HV3	20.53	165	91.7	575	9.6	1
15	1800	254T	**EHM2333T-5**	3,409	HV3	23.28	255	92.4	575	14.6	1
20	1800	256T	**EHM2334T-5**	4,123	HV3	23.28	286	93	575	19.2	1
25	1800	284T	**EHM4103T-5**	5,378	HV3	27.76	397	93.6	575	24	1
30	1800	286T	**EHM4104T-5**	6,373	HV3	27.76	395	93.6	575	29	1
40	1800	324T	**EHM4110T-5**	8,317	HV3	30.28	575	94.1	575	39	1
50	1800	326T	**EHM4115T-5**	9,058	HV3	30.28	622	94.5	575	50	1

(a) See notes on inside back flap.

Cast iron frame

*IP54 when Drain Fitting Kit #HA5027A03 is installed in the weep holes (48 thru 256T frame motors only)

Chiller/cooling tower, three phase, TEAO

3 thru 60 Hp

IP55

Features:

- Severe duty construction for harsh environments
- Corrosion resistant epoxy finish
- Multiple lifting provisions for ease of installation
- Strategically placed drains for optimal moisture removal
- Four barrier shaft sealing system on drive end
- Lipped conduit lid for increased ingress protection

Applications:

- Cooling towers
- Chillers
- Fans
- Pumps
- Air handling
- HVAC systems
- General purpose applications

Hp	RPM	NEMA Frame	Catalog Number	List Price	Disc. Sym.	"C" Dim.	Aprx. Wt. (lb)	Full Load Efficiency	Voltage	Full Load Amps	Airflow Ft/Min	Notes (a)
3	1800	213T	**ECTM3611T-57**	2,462	HV3	16.32	116	87.5	230/380-415	4.8	1200	
	1200	213T	**ECTM3704T**	2,035	HV3	17.45	140	89.5	230/460	4.6	1200	
5	1800	213T	**ECTM3615T-57**	2,971	HV3	17.45	134	88.5	230/380-415	7.4	1200	
		184T	**CTM3665T**	1,803	HV3	13.68	100	87.5	208-230/460	6.9	1200	
		184T	**ECTM3665T**	2,040	HV3	13.68	108	89.5	208-230/460	6.6	1200	
	1200	213T	**ECTM3708T**	2,447	HV3	18.95	185	89.5	230/460	7.2	1200	
		215T	**CTM3768T**	2,733	HV3	19.54	206	87.5	208-230/460	7.5	1200	
		215T	**ECTM3768T**	3,241	HV3	19.54	227	90.2	230/460	7.3	1200	30
7 1/2	1800	213T	**CTM3770T**	2,401	HV3	19.54	164	89.5	208-230/460	10.3	1500	
		213T	**ECTM3770T**	2,722	HV3	19.54	170	91.7	208-230/460	9.5	1500	
	1200	254T	**CTM2276T**	3,335	HV3	22.16	179	89.5	208-230/460	10.9	1500	
		254T	**ECTM2276T**	4,614	HV3	23.00	290	91	230/460	11	1500	30
10	1800	215T	**CTM3774T**	3,064	HV3	19.54	170	89.5	208-230/460	13	1500	
		215T	**ECTM3774T**	3,652	HV3	19.54	231	91.7	208-230/460	12.2	1500	
	1200	256T	**CTM2332T**	3,712	HV3	23.00	275	89.5	230/460	14.4	1500	30
		256T	**ECTM2332T**	5,271	HV3	23.00	297	91	230/460	14.4	1500	30
15	1800	254T	**CTM2333T**	4,071	HV3	22.16	236	91	208-230/460	18.5	1500	
		254T	**ECTM2333T**	4,848	HV3	23.00	278	92.4	230/460	18.1	1500	30
	1200	284T	**ECTM4100T**	7,028	HV3	25.63	345	91.7	230/460	20	1500	30
20	1800	256T	**CTM2334T**	4,538	HV3	23.91	245	91	230/460	25	1500	30
		256T	**ECTM2334T**	5,408	HV3	23.00	293	93	230/460	24	1500	30
25	1800	284T	**CTM4103T**	5,502	HV3	25.78	343	92.4	230/460	29	1500	30
		284T	**ECTM4103T**	6,656	HV3	25.63	378	93.6	230/460	30	1500	30
30	1800	286T	**CTM4104T**	6,603	HV3	25.78	363	92.4	230/460	36	1500	30
		286T	**ECTM4104T**	7,899	HV3	25.63	410	93.6	230/460	38	1500	30
40	1800	324T	**CTM4110T**	8,783	HV3	28.38	529	93	230/460	47	2000	30
		324T	**ECTM4110T**	10,330	HV3	28.38	553	94.1	230/460	48	1500	30
50	1800	326T	**ECTM4115T**	12,350	HV3	28.38	598	94.5	230/460	58	2000	30
60	1800	364T	**ECTM4314T**	16,241	HV3	29.70	835	95	230/460	68	2000	30

(a) See notes on inside back flap.

Cast iron frame

Chiller/cooling tower, three phase, two speed, TEFC

10 thru 60 Hp

IP55

Features:

- Multi speed electrical design
- Severe duty construction for harsh environments
- Corrosion resistant epoxy finish
- Lead lugs for ease of connectivity

Applications:

- Cooling towers
- Chillers
- Fans
- Pumps
- Air handling
- HVAC systems
- General purpose applications

Hp	RPM	NEMA Frame	Catalog Number	List Price	Disc. Sym.	"C" Dim.	Aprx. Wt. (lb)	Full Load Efficiency (b)	Voltage	Full Load Amps	Notes (a)
10/2.5	1800/900	215T	**CTM1760T**	5,689	HV3	19.32	210	89.5	460	14.3	
15/3.75	1800/900	254T	**CTM1761T**	7,214	HV3	24.78	290	90.2	460	18.1	
20/5	1800/900	256T	**CTM1762T**	8,716	HV3	24.78	299	91	460	23.6	
25/6.25	1800/900	284T	**CTM1763T**	10,140	HV3	27.93	342	91.7	460	32	
30/7.5	1800/900	286T	**CTM1764T**	11,640	HV3	27.93	333	91.7	460	36	
40/10	1800/900	324T	**CTM1765T**	15,281	HV3	30.28	619	92.4	460	48	
50/12.5	1800/900	326T	**CTM1766T**	18,029	HV3	30.28	657	90.2	460	63	
60/15	1800/900	364T	**CTM1767T**	26,111	HV3	33.44	836	93	460	69.6	

(a) See notes on inside back flap.
(b) Full load efficiency is at 1800 RPM and low speed efficiency is not published.
Cast iron frame

NEW!

Chiller/cooling tower, three phase, TEAO, shaft ground

3 thru 60 Hp

AEGIS INSTALLED

IP55

Features:

- Robust cast iron or rolled steel frame construction
- IP55 ingress protection
- Multicolor leads, for ease of connections
- Suitable for inverter use per NEMA MG1 Part 31.4.4.2
- Space heaters
- Internal AEGIS® Bearing Protection Ring installed
- Designed for longevity with a 3 year warranty

Applications:

- Cooling towers
- Chillers
- Fans
- Pumps
- Air Handling
- HVAC Systems

Hp	RPM	NEMA Frame	Catalog Number	List Price	Disc. Sym.	"C" Dim.	Aprx. Wt. (lb)	Full Load Efficiency	Voltage	Full Load Amps	Airflow Ft/Min	Notes (a)
3	1800	184	ECTM3611T-G-AO	2,499	HV3	16.32	116	87.5	230/380-415	4.8	1200	
	1200	213T	ECTM3704T-G-AO	2,066	HV3	17.45	140	89.5	230/460	4.6	1200	
5	1800	184T	ECTM3615T-G-AO	3,016	HV3	17.45	134	88.5	230/380-415	7.4	1200	
		184T	ECTM3665T-G-AO	2,072	HV3	13.68	100	87.5	208-230/460	6.9	1200	
	1200	213T	ECTM3708T-G-AO	2,484	HV3	18.95	185	89.5	230/460	7.2	1200	
		215T	ECTM3768T-G-AO	3,290	HV3	19.54	206	87.5	208-230/460	7.5	1200	
7 1/2	1800	213T	ECTM3770T-G-AO	2,764	HV3	19.54	164	89.5	208-230/460	10.3	1500	
	1200	254T	ECTM2276T-G-AO	4,685	HV3	22.16	179	89.5	208-230/460	10.9	1500	
10	1800	215T	ECTM3774T-G-AO	3,708	HV3	19.54	170	89.5	208-230/460	13	1500	
	1200	256T	ECTM2332T-G-AO	5,352	HV3	23.00	275	89.5	230/460	14.4	1500	30
15	1800	254T	ECTM2333T-G-AO	4,921	HV3	22.16	236	91	208-230/460	18.5	1500	
	1200	284T	ECTM4100T-G-AO	7,135	HV3	25.63	345	91.7	230/460	20	1500	30
20	1800	256T	ECTM2334T-G-AO	5,489	HV3	23.91	245	91	230/460	25	1500	30
25	1800	284T	ECTM4103T-G-AO	6,757	HV3	25.78	343	92.4	230/460	29	1500	30
30	1800	286T	ECTM4104T-G-AO	8,018	HV3	25.78	363	92.4	230/460	36	1500	30
40	1800	324T	ECTM4110T-G-AO	10,485	HV3	28.38	529	93	230/460	47	2000	30
50	1800	326T	ECTM4115T-G-AO	12,536	HV3	28.38	598	94.5	230/460	58	2000	30
60	1800	364T	ECTM4314T-G-AO	16,487	HV3	29.70	835	95	230/460	68	2000	30

(a) See notes on inside back flap.
Cast iron frame
Red catalog number indicates **NEW** product.

NEW!

NEW!

Chiller/cooling tower, three phase, TEFC, shaft ground

1 thru 100 Hp

AEGIS SGR BEARING PROTECTION RING
AEGIS INSTALLED

IP55

Features:

- Robust cast iron frame construction
- IP55 ingress protection
- Multicolor leads, for ease of connections
- Suitable for inverter use per NEMA MG1 Part 31.4.4.2
- Space heaters
- Internal AEGIS® Bearing Protection Ring installed
- Designed for longevity with a 3 year warranty

Applications:

- Cooling towers
- Chillers
- Fans
- Pumps
- Air Handling
- HVAC System

Hp	RPM	NEMA Frame	Catalog Number	List Price	Disc. Sym.	"C" Dim.	Aprx. Wt. (lb)	Full Load Efficiency (b)	Voltage	Full Load Amps	Notes (a)
1	1800	143T	**ECTM3581T-G**	2,311	HV3	12.54	55	85.5	230/460	1.5	
	1200	145T	**ECTM3582T-G**	2,804	HV3	12.54	56	82.5	230/460	1.7	
1.5	1800	145T	**ECTM3584T-G**	2,586	HV3	12.54	61	86.5	230/460	2.3	
	1200	182T	**ECTM3667T-G**	3,281	HV3	15.24	99	87.5	230/460	2.5	
2	1800	145T	**ECTM3587T-G**	2,701	HV3	12.54	62	86.5	230/460	2.9	
	1200	184T	**ECTM3664T-G**	3,323	HV3	15.24	123	88.5	230/460	3.15	
3	1800	182T	**ECTM3661T-G**	3,416	HV3	15.24	105	89.5	230/460	4.1	
	1200	213T	**ECTM3764T-G**	4,795	HV3	18.45	173	89.5	230/460	4.5	
5	1800	184T	**ECTM3665T-G**	3,476	HV3	15.24	107	89.5	230/460	6.6	
	1200	215T	**ECTM3768T-G**	4,860	HV3	18.45	195	89.5	230/460	7.4	
7.5	1800	213T	**ECTM3770T-G**	4,377	HV3	18.45	170	91.7	230/460	9.5	
	1200	254T	**ECTM2276T-G**	6,952	HV3	23.28	278	91	230/460	11	
10	1800	215T	**ECTM3774T-G**	5,240	HV3	18.45	232	91.7	230/460	12.2	
	1200	256T	**ECTM2332T-G**	9,032	HV3	23.28	290	91	230/460	14.1	
15	1800	254T	**ECTM2333T-G**	6,678	HV3	23.28	270	92.4	230/460	18.1	
	1200	284T	**ECTM4100T-G**	10,355	HV3	27.76	391	91.7	230/460	21	
20	1800	256T	**ECTM2334T-G**	7,161	HV3	23.30	289	93	230/460	24	
	1200	286T	**ECTM4102T-G**	14,069	HV3	27.76	399	91.7	230/460	27	
25	1800	284T	**ECTM4103T-G**	9,371	HV3	27.76	388	93.6	230/460	30	
	1200	324T	**ECTM4111T-G**	14,702	HV3	30.39	445	93	230/460	32	
30	1800	286T	**ECTM4104T-G**	11,126	HV3	27.76	430	93.6	230/460	38	
	1200	326T	**ECTM4117T-G**	18,952	HV3	30.28	604	93	230/460	39	
40	1800	324T	**ECTM4110T-G**	14,557	HV3	30.28	570	94.1	230/460	48	
	1200	364T	**ECTM4308T-G**	23,163	HV3	33.48	899	94.1	230/460	49.4	
50	1800	326T	**ECTM4115T-G**	17,086	HV3	30.28	650	94.5	230/460	58	
	1200	365T	**ECTM4312T-G**	27,427	HV3	33.48	902	94.1	230/460	61.7	
60	1800	364T	**ECTM4314T-G**	24,392	HV3	33.44	912	95	230/460	67.8	
	1200	404T	**ECTM4403T-G**	34,368	HV3	38.04	1187	95	230/460	69	
75	1800	365T	**ECTM4316T-G**	28,065	HV3	33.48	955	95.4	230/460	84.9	
	1200	405T	**ECTM4404T-G**	41,826	HV3	38.04	1229	94.5	230/460	86.8	
100	1800	405T	**ECTM4400T-4G**	36,861	HV3	38.04	1203	95.4	230/460	112	
	1200	444T	**ECTM4409T-4G**	46,005	HV3	44.75	1828	95	230/460	119	

(a) See notes on inside back flap.
(b) Full load efficiency is at 1800 RPM and low speed efficiency is not published.
Cast iron frame
Red catalog number indicates **NEW** product.

NEW!

NEW!

Chiller/cooling tower, three phase, TEFC, 575V, shaft ground

1 thru 75 Hp

AEGIS INSTALLED

IP55

Features:

- Robust cast iron frame construction
- IP55 ingress protection
- Multicolor leads, for ease of connections
- Suitable for inverter use per NEMA MG1 Part 31.4.4.2
- Space heaters
- Internal AEGIS® Bearing Protection Ring installed
- Designed for longevity with a 3 year warranty

Applications:

- Cooling towers
- Chillers
- Fans
- Pumps
- Air Handling
- HVAC System

Hp	RPM	NEMA Frame	Catalog Number	List Price	Disc. Sym.	"C" Dim.	Aprx. Wt. (lb)	Full Load Efficiency (b)	Voltage	Full Load Amps	Notes (a)
1	1800	143T	ECTM3581T-5G	2,311	HV3	12.54	55	85.5	575	1.5	
	1200	145T	ECTM3582T-5G	2,804	HV3	12.54	56	82.5	575	1.7	
1.5	1800	145T	ECTM3584T-5G	2,586	HV3	12.54	61	86.5	575	2.3	
	1200	182T	ECTM3667T-5G	3,281	HV3	15.24	99	87.5	575	2.5	
2	1800	145T	ECTM3587T-5G	2,701	HV3	12.54	62	86.5	575	2.9	
	1200	184T	ECTM3664T-5G	3,323	HV3	15.24	123	88.5	575	3.15	
3	1800	182T	ECTM3661T-5G	3,416	HV3	15.24	105	89.5	575	4.1	
	1200	213T	ECTM3764T-5G	4,795	HV3	18.45	173	89.5	575	4.5	
5	1800	184T	ECTM3665T-5G	3,476	HV3	15.24	107	89.5	575	6.6	
	1200	215T	ECTM3768T-5G	4,860	HV3	18.45	195	89.5	575	7.4	
7.5	1800	213T	ECTM3770T-5G	4,377	HV3	18.45	170	91.7	575	9.5	
	1200	254T	ECTM2276T-5G	6,952	HV3	23.28	278	91	575	11	
10	1800	215T	ECTM3774T-5G	5,240	HV3	18.45	232	91.7	575	12.2	
	1200	256T	ECTM2332T-5G	9,032	HV3	23.28	290	91	575	14.1	
15	1800	254T	ECTM2333T-5G	6,678	HV3	23.28	270	92.4	575	18.1	
	1200	284T	ECTM4100T-5G	10,355	HV3	27.76	391	91.7	575	21	
20	1800	256T	ECTM2334T-5G	7,161	HV3	23.30	289	93	575	24	
	1200	286T	ECTM4102T-5G	14,069	HV3	27.76	399	91.7	575	27	
25	1800	284T	ECTM4103T-5G	9,371	HV3	27.76	388	93.6	575	30	
	1200	324T	ECTM4111T-5G	14,702	HV3	30.39	445	93	575	32	
30	1800	286T	ECTM4104T-5G	11,126	HV3	27.76	430	93.6	575	38	
	1200	326T	ECTM4117T-5G	18,952	HV3	30.28	604	93	575	39	
40	1800	324T	ECTM4110T-5G	14,557	HV3	30.28	570	94.1	575	48	
	1200	364T	ECTM4308T-5G	23,163	HV3	33.48	899	94.1	575	49.4	
50	1800	326T	ECTM4115T-5G	17,086	HV3	30.28	650	94.5	575	58	
	1200	365T	ECTM4312T-5G	27,427	HV3	33.48	902	94.1	575	61.7	
60	1800	364T	ECTM4314T-5G	24,392	HV3	33.44	912	95	575	67.8	
	1200	404T	ECTM4403T-5G	34,368	HV3	38.04	1187	95	575	69	
75	1800	365T	ECTM4316T-5G	28,065	HV3	33.48	955	95.4	575	84.9	
	1200	405T	ECTM4404T-5G	41,826	HV3	38.04	1229	94.5	575	86.8	

(a) See notes on inside back flap.
(b) Full load efficiency is at 1800 RPM and low speed efficiency is not published.
Cast iron frame
Red catalog number indicates **NEW** product.

NEW!

Three phase, TEAO, foot mounted

1/4 thru 10 Hp

IP44*

Features:

- 36” long leads for ease of connectivity
- Oversized ball bearings for large overhung load from shaft mounted fans
- Locked DE bearing to allow mounting in any configuration

Applications:

- Fans
- Pumps
- Blowers
- Condensers
- Air handling
- HVAC systems
- General purpose applications

Hp	RPM	NEMA Frame	Catalog Number	List Price	Disc. Sym.	“C” Dim.	Aprx. Wt. (lb)	Full Load Efficiency	Voltage	Full Load Amps	Notes (a)
1/4	1800	48	**AOM3454**	555	HV3	9.63	18	64	230/460	0.7	2, 20, 30
	1200	48	**AOM3455**	871	HV3	9.63	19	68	230/460	0.7	2, 20, 30
1/3	1800	48	**AOM3458**	619	HV3	9.63	18	68	230/460	0.9	2, 20, 30
	1200	56	**AOM3535**	917	HV3	10.25	22	70	208-230/460	0.9	2, 20
1/2	1800	56	**AOM3538**	728	HV3	10.25	25	70	208-230/460	1.1	2, 20
	1200	56	**AOM3539**	988	HV3	10.88	24	72	208-230/460	1.2	2, 20
3/4	1800	56	**AOM3542**	784	HV3	10.25	23	72	208-230/460	1.6	2, 20
	1200	56	**AOM3543**	1,016	HV3	11.75	31	77	208-230/460	1.5	2, 20
1	1800	143T	**AOM3546T**	815	HV3	11.81	33	75.5	208-230/460	1.8	2
	1200	145T	**AOM3556T**	1,031	HV3	11.12	35	78.5	208-230/460	1.9	2
	900	182T	**AOM3617T**	1,996	HV3	13.62	62	74	208-230/460	2.2	2
1 1/2	1800	145T	**AOM3554T**	848	HV3	11.12	34	81.5	208-230/460	2.3	2, 20
	1200	182T	**AOM3607T**	1,179	HV3	13.62	50	78.5	208-230/460	2.5	2, 20
2	1800	145T	**AOM3558T**	899	HV3	12.12	38	82.5	208-230/460	3	2, 20
	1200	184T	**AOM3614T**	1,265	HV3	15.00	63	81.5	208-230/460	3.4	2, 20
	900	213T	**AOM3702T**	3,028	HV3	16.32	97	82.5	208-230/460	3.5	2
3	1800	182T	**AOM3611T**	1,054	HV3	13.62	59	85.5	208-230/460	4.5	2, 20
	1200	213T	**AOM3704T**	1,584	HV3	16.32	92	84	208-230/460	4.8	2, 20
	900	215T	**AOM3705T**	3,310	HV3	17.44	113	86.5	208-230/460	5.2	2, 20
5	1800	184T	**AOM3615T**	1,219	HV3	15.00	71	87.5	208-230/460	6.8	1
	1200	215T	**AOM3708T**	2,267	HV3	16.32	115	86.5	208-230/460	7.6	2, 20
	900	254T	**AOM25904T**	5,259	HV3	19.63	208	82.5	230/460	8.9	1, 30
7 1/2	1800	213T	**AOM3710T**	1,563	HV3	16.32	106	87.5	208-230/460	10.9	1
10	1800	215T	**AOM3714T**	1,894	HV3	17.45	126	89.5	208-230/460	13.5	2, 20

(a) See notes on inside back flap.
*IP54 when Drain Fitting Kit #HA5027A03 is installed in the weep holes (48 thru 256T frame motors only)

Condenser fan, three phase, ODP, “belly band” round body
1/2 thru 1 1/2 Hp

IP22

Features:
- 6” long shaft with flat and keyway
- Terminal panel for ease of connectivity
- Automatic thermal overload protection
- Lubed for life double shielded bearings

Applications:
- Fans
- Pumps
- Blowers
- Condensers
- Air handling
- HVAC systems
- General purpose applications

Hp	RPM	NEMA Frame	Catalog Number	List Price	Disc. Sym.	“C” Dim.	Aprx. Wt. (lb)	Full Load Efficiency	Voltage	Full Load Amps	Notes (a)
1/2	1200	48YZ	**CFM3036A**	932	HV3	14.29	25	72	208-230/460	1.2	2, 20
		56YZ	**CFM3136A**	965	HV3	15.30	28	70	208-230/460	1.2	
3/4	1200	48YZ	**CFM3046A**	1,011	HV3	16.02	33	77	208-230/460	1.5	2, 20
		56YZ	**CFM3146A**	1,042	HV3	15.55	33	75.5	208-230/460	1.4	
1	1200	56YZ	**CFM3156A**	1,189	HV3	16.55	38	75.5	208-230/460	1.8	
1 1/2	1200	56YZ	**CFM3166A**	1,293	HV3	17.43	48	76	208-230/460	2.5	

(a) See notes on inside back flap.

Condenser fan, three phase, TEAO, “belly band” round body
1/2 Hp

IP44*

Features:
- Low temp grease for use in industrial freezers
- Terminal panel for ease of connectivity
- Automatic thermal overload protection
- Lubed for life double shielded bearings
- 60 and 50 Hz data included for connection at either frequency

Applications:
- Industrial freezers/ refrigeration
- Food processing plants
- Low temperature condensers

Hp	RPM	NEMA Frame	Catalog Number	List Price	Disc. Sym.	“C” Dim.	Aprx. Wt. (lb)	Full Load Efficiency	Voltage	Full Load Amps	Notes (a)
1/2	1200	56	**M3539-TP**	1,029	HV3	11.68	29	70	208-230/460	1.2	

(a) See notes on inside back flap.
*IP54 when Drain Fitting Kit #HA5027A03 is installed in the weep holes (48 thru 256T frame motors only)

Fan and blower, single and three phase, ODP, resilient base

1/4 thru 2 Hp

IP22

Features:

- Resilient cushion base for low noise and reduced vibration
- Terminal panel for ease of connectivity
- Automatic thermal overload protection
- Lubed for life double shielded bearings

Applications:

- Fans
- Pumps
- Blowers
- Condensers
- Air handling
- HVAC systems
- General purpose applications

Hp	RPM	NEMA Frame	Catalog Number	List Price	Disc. Sym.	"C" Dim.	Aprx. Wt. (lb)	Full Load Efficiency	Voltage	Full Load Amps	Notes (a)
Single phase											
1/4	1800	48	**ERL1203A**	514	HV1	10.34	20	68.5	115/230	1.3	13, 30, 96
1/3	1800	56	**ERL1206A**	568	HV1	10.96	24	72.4	115/230	1.7	13, 30, 96
1/2	3600	48	**RL1209A**	548	HV1	10.96	27	74	115/230	4.2	12, 30, 96
	1800	56	**RL1304A**	715	HV1	11.59	26	62	115/230	4.2	12, 30, 66, 96
		56	**RL1323A**	650	HV1	10.97	24	62	115/230	4	2, 66
3/4	3600	56	**ERL1306A**	756	HV1	11.59	26	76.2	115/230	3.3	12, 30, 66, 96
	1800	56H	**RL1307A**	876	HV1	12.96	34	68	115/230	5.1	12, 30, 66, 96
		56	**RL1324A**	705	HV1	12.47	31	71	115/230	5	2, 66
1	3600	56H	**ERL1309A**	869	HV1	11.42	36	82	115/230	3.9	12, 30, 66, 96
	1800	56H	**RL1310A**	952	HV1	12.04	34	68	115/230	6.5	12, 30, 66
1 1/2	3600	56H	**ERL1313A**	1,135	HV1	13.30	52	82	115/230	5.9	15, 30, 66
	1800	56H	**ERL1319A**	1,275	HV1	14.67	59	83.8	115/230	6.2	15, 66
Single phase, 277 volt											
1/3	1800	56	**RL1301A277**	734	HV1	10.97	23	60	277	2.5	13, 66
1/2	1800	56	**RL1304A277**	764	HV1	11.59	26	62	277	3.6	12, 66
3/4	1800	56H	**RL1307A277**	1,052	HV1	12.47	34	66	277	4.2	12, 66
1	1800	56H	**RL1310A277**	1,082	HV1	12.42	42	70	277	5.4	66
1 1/2	1800	56H	**ERL1319A277**	1,275	HV1	14.67	59	84	277	5.2	15, 66
Three phase											
1/4	1800	48	**ERM3003**	720	HV3	10.34	21	69.5	230/460	0.5	13, 15, 30
1/3	1800	48	**ERM3007**	749	HV3	10.34	24	73.4	230/460	0.7	13, 15, 30
		56	**ERM3104**	749	HV3	10.97	24	73.4	230/460	0.7	13, 15, 30
1/2	3600	48	**ERM3009**	790	HV3	10.34	24	73.4	230/460	0.8	12, 15, 30
	1800	48	**ERM3010**	805	HV3	11.84	31	78.2	230/460	0.8	12, 15, 30
		56	**ERM3108**	805	HV3	11.97	31	78.2	230/460	0.8	12, 15, 30
3/4	3600	56	**ERM3111**	799	HV3	10.97	24	76.8	230/460	1.2	12, 15, 30
	1800	56	**ERM3112**	888	HV3	11.42	38	84	208-230/460	1.3	12, 15
1	3600	56	**ERM3115**	843	HV3	12.47	27	77	230/460	1.6	12, 15, 30
	1800	56	**ERM3116**	925	HV3	11.42	37	83.5	230/460	1.45	15, 30
1 1/2	3600	56H	**ERM3120**	894	HV3	11.42	34	84	208-230/460	2	15
	1800	56H	**ERM3154**	955	HV3	12.42	41	86.5	208-230/460	2.2	15
2	3600	56H	**ERM3155**	1,037	HV3	12.42	43	85.5	230/460	2.6	15
	1800	56H	**ERM3157**	1,108	HV3	12.42	43	86.5	208-230/460	2.9	15

(a) See notes on inside back flap.
Red catalog number indicates **NEW** product.

Three phase, ODP
1/3 thru 5 Hp

IP22

Features:
- Terminal panel for ease of connectivity
- Automatic thermal overload protection
- Lubed for life double shielded bearings

Applications:
- Fans
- Pumps
- Blowers
- Condensers
- Air handling
- HVAC systems
- General purpose applications

Hp	RPM	NEMA Frame	Catalog Number	List Price	Disc. Sym.	"C" Dim.	Aprx. Wt. (lb)	Full Load Efficiency	Voltage	Full Load Amps	Notes (a)
Foot mounted											
5	1800	184T	**EHM3218TA**	1,772	HV3	16.50	84	89.5	230/460	6.6	11, 30
Resilient base											
1/3	1800	48	**RM3007A**	529	HV3	10.34	21	68	230/460	0.8	12, 30
1/2	1800	56H	**RM3108A**	802	HV3	10.97	25	72	230/460	0.9	12, 30, 36
3/4	1800	56H	**RM3112A**	863	HV3	11.59	32	74	230/460	1.5	12, 30, 36, 96
1	1800	56H	**RM3116A**	899	HV3	12.47	32	78.5	230/460	2	30, 36, 96
1 1/2	1800	56H	**RM3154A**	955	HV3	12.04	34	78.5	208-230/460	2.4	36
2	1800	56H	**RM3157A**	1,095	HV3	12.42	40	81.5	208-230/460	2.9	36
3	3600	145TY	**ERM3158TA**	1,312	HV3	13.64	48	85.5	230/460	3.8	30
5	3600	145TY	**ERHM3162TA**	1,874	HV3	15.02	60	86.5	230/460	6.1	30

(a) See notes on inside back flap.

(PSC) – direct drive fan, single phase, foot mounted, TEAO
1/4 thru 1/2 Hp

IP44*

Features:
- 1" extended through bolts for grille mounting
- Terminal panel for ease of connectivity
- Automatic thermal overload protection
- Lubed for life double shielded bearings
- Switchless design for increased reliability

Applications:
- Fans
- Pumps
- Blowers
- Condensers
- Air handling
- HVAC systems
- General purpose applications

Hp	RPM	NEMA Frame	Catalog Number	List Price	Disc. Sym.	"C" Dim.	Aprx. Wt. (lb)	Full Load Efficiency	Voltage	Full Load Amps	Notes (a)
1/4	1800	48Z	**PSC3413A**	659	HV1	11.34	19	65.5	115/230	1.3	2, 29
1/3	1800	48Z	**PSC3416A**	731	HV1	11.34	21	62	115/230	1.8	2, 29
1/2	1800	48Z	**PSC3524A**	802	HV1	11.96	24	65	115/230	3	2, 29

(a) See notes on inside back flap.
*IP54 when Drain Fitting Kit #HA5027A03 is installed in the weep holes (48 thru 256T frame motors only)

Direct drive fan, single and three phase, TEAO

1/4 thru 1 Hp

IP54

Features:

- Resilient cushion base for low noise and reduced vibration
- 1" extended through bolts for grille mounting
- Terminal panel for ease of connectivity
- Automatic thermal overload protection
- Lubed for life double shielded bearings

Applications:

- Fans
- Pumps
- Blowers
- Condensers
- Air handling
- HVAC systems
- General purpose applications

Hp	RPM	NEMA Frame	Catalog Number	List Price	Disc. Sym.	"C" Dim.	Aprx. Wt. (lb)	Voltage	Full Load Amps	S.F.	Notes (a)
Single phase, permanent split capacitor											
1/4	1800	48Z	**CHC144A**	571	HV1	11.35	21	115/230	1.4	1	30
	1200	48Z	**CHC164A**	664	HV1	11.35	22	115/230	1.5	1.15	30
1/3	1800	48Z	**CHC244A**	637	HV1	11.35	22	115/230	1.7	1.15	30
	1200	48Z	**CHC264A**	769	HV1	11.35	26	115/230	1.8	1.15	30
1/2	1800	56YZ	**CHC345A**	721	HV1	12.70	27	115/230	2.6	1.15	30
	1200	56YZ	**CHC365A**	830	HV1	13.58	31	115/230	3.2	1.15	30
3/4	1800	56YZ	**CHC445A**	822	HV1	13.58	35	115/230	3.7	1.15	
1	1800	56	**CHC545A**	879	HV1	13.04	39	115/230	4.9	1	
	1200	56	**CHC565A**	1,189	HV1	13.92	51	115/230	5.3	1	20
Three phase											
1/4	1200	48YZ	**CHM164A**	672	HV3	11.34	20	230/460	0.7	1.25	30, 96
1/3	1200	48YZ	**CHM264A**	716	HV3	11.34	19	230/460	0.9	1.25	30
1/2	1800	48YZ	**CHM344A**	685	HV3	11.34	23	230/460	1.1	1.25	30
		56YZ	**CHM345A**	690	HV3	12.08	24	230/460	1.1	1.25	30
	1200	48YZ	**CHM364A**	779	HV3	11.96	25	230/460	1.2	1.25	30
		56YZ	**CHM365A**	785	HV3	12.70	28	230/460	1.2	1.25	30
3/4	1200	56YZ	**CHM465A**	897	HV3	13.58	34	208-230/460	1.5	1.15	
1	1800	56YZ	**CHM545A**	866	HV3	13.58	34	208-230/460	1.7	1.15	
	1200	56	**CHM565A**	1,021	HV3	13.04	40	208-230/460	1.8	1.15	

(a) See notes on inside back flap.

Yoke/pedestal fan, single phase, PSC, TEAO

1/4 thru 1/2 Hp

IP54

Features:

- Robust stamped steel pedestal mount
- 1" extended through bolts for grille mounting
- Terminal panel for ease of connectivity
- Automatic thermal overload protection
- Lubed for life double shielded bearings
- Switchless design for increased reliability

Applications:

- Fans
- Pumps
- Blowers
- Condensers
- Air handling
- HVAC systems
- General purpose applications

Hp	RPM	NEMA Frame	Catalog Number	List Price	Disc. Sym.	"C" Dim.	Aprx. Wt. (lb)	Voltage	Full Load Amps	S.F.	Notes (a)
1/4	1800	48YZ	**YPC144A**	489	HV1	10.68	18	115	2.5	1	
	1200	48YZ	**YPC164A**	555	HV1	10.68	22	115	2.8	1	
1/3	1800	48YZ	**YPC244A**	529	HV1	10.68	21	115	3.4	1	
		56YZ	**YPC245A**	537	HV1	10.68	21	115	3.4	1	
	1200	48YZ	**YPC264A**	608	HV1	10.68	22	115	3.5	1	
1/2	1800	48YZ	**YPC344A**	608	HV1	10.68	22	115	5.1	1	
		56YZ	**YPC345A**	616	HV1	10.68	24	115	5.1	1	
	1200	48YZ	**YPC364A**	695	HV1	11.31	27	115	5.4	1	

(a) See notes on inside back flap.

Ventilation fan, three phase TEAO, C-Face, footless

1/2 thru 1 Hp

IP44*

Features:

- Terminal panel for ease of connectivity
- Lubed for life double sealed bearings
- Locked DE bearing to allow mounting in any configuration

Applications:

- Fans
- Pumps
- Blowers
- Condensers
- Air handling
- HVAC systems
- General purpose applications

Hp	RPM	NEMA Frame	Catalog Number	List Price	Disc. Sym.	"C" Dim.	Aprx. Wt. (lb)	Full Load Efficiency	Voltage	Full Load Amps	Notes (a)
1/2	900	56C	**VAOM3560**	1,108	HV3	12.68	50	64	208-230/460	1.6	
1	900	56C	**VAOM3527**	1,314	HV3	14.93	57	74	208-230/460	3.2	

(a) See notes on inside back flap.
*IP54 when Drain Fitting Kit #HA5027A03 is installed in the weep holes (48 thru 256T frame motors only)

Farm duty motors

ABB offers one of the most complete lines of Farm duty motors available on the market. As the largest motor manufacturer in North America, ABB has led the market for Farm duty motors for years. We have the motor for just about any agricultural applications you may have.

Key features:

- Dynamically balanced rotor to reduce noise and increased bearing life
- Color coded and numbered leads for ease of connectivity
- Corrosion resistant brown epoxy finish
- Optimized windings to protect against voltage drop and phase shift
- Baldor-Reliance® motors meet or exceed all efficiency requirements for US, Canada and Mexico regulations

1/3 - 100 Horsepower

Product line – TEFC, ODP, TEAO, OPAO & TENV enclosures		Super-E®	Grain Dryer/ Centrifugal Fan	Grain Dryer/ Vane Axial Fan	Universal Crop Dryer	Aeration Fan	(PSC)-Direct Drive Fan
NEMA frame sizes		56-405T	184TZ-326TZ	145TZ-215TZ	184Z-215Z	56Z-145T	48Z-56Z
Electrical features							
Efficiency	Super-E® motor designs meet or exceed NEMA Premium® requirements	S	S	S	–	S	–
Torque	NEMA Design B torques as a minimum	S	–	S	–	S	–
Service factor & temp. rise	1.0 service factor – continuous	S	S	S	S	S	S
	1.15 service factor	S	S	S	–	–	–
	1.25 service factor	–	–	–	–	S	–
	Class F insulation with Class B rise	S	S	S	S	S	S
Windings	Single phase	S	S	S	S	S	S
	Three phase	S	S	S	–	S	–
	Corona inception testing – meets NEMA Part 31.4.4.2	S	S	S	S	S	S
	Single dip & bake with 100% solids epoxy	S	S	S	S	S	S
Connections	Grounding terminal inside main conduit box	S	S	S	S	S	S
Document	Documented final motor tests – ship with motor	A	A	A	A	A	A
Mechanical features							
Frame	Steel band frame – cast iron endplates & conduit box, steel fan cover	S	S	S	S	S	S
	Cast iron frame – cast iron endplates & conduit box, cast iron fan cover	S	S	–	–	–	–
	Screens on ODP to protect against entry of trash, snakes or rodents	–	S	S	S	–	–
Conduit box	Oversized conduit box rotatable in 90 degree increments on three phase motors	A	A	A	–	A	–
	Gasketed conduit box	S	A	A	A	A	–
	NPT threaded lead inlet hole in conduit box	S	S	–	S	S	S
Lubrication	Lubrication fittings on T frames	S	–	–	–	S	–
	Grease inlet fitting – DE & ODE on bearings not sealed	–	–	–	S	S	–
	Mobil Polyrex™ EM moisture resistant grease	S	S	S	A	A	S
Shaft seals	Lip and V-Ring seal on drive end	S	S	S	S	–	–
Cooling	Non-metallic external cooling fan	S	S	–	–	–	–
Paint	Corrosion resistant E-Coat	S	S	S	S	S	S
	Painted with brown 2-part epoxy primer and epoxy finish coat	S	S	S	S	S	S
Nameplate	Laser etched nameplate with highly legible font	S	S	S	S	S	S

S = Standard A = Available through Mod Express® or as custom

Super-E®, three phase, TEFC

1/2 thru 100 Hp

IP54

Features:

- Lubed for life double sealed ball bearings
- Lip seal and V-Ring slinger on DE for increased moisture resistance
- Designed for longevity with 3 year warranty
- Suitable for inverter use per NEMA MG1 Part 31.4.4.2

Applications:

- Industrial fans
- General purpose farm
- Industrial pumps

Hp	RPM	NEMA Frame	Catalog Number	List Price	Disc. Sym.	"C" Dim.	Aprx. Wt. (lb)	Full Load Efficiency	Voltage	Full Load Amps	Notes (a)
1/2	1800	56	**FDM3538**	873	FD3	11.35	24	74.0	208-230/460	1.0	1
3/4	1800	56	**FDM3542**	934	FD3	11.35	27	75.5	208-230/460	1.5	1
1	1800	56	**FDEM3546**	1,243	FD3	12.23	38	85.5	230/460	1.5	1, 30
		143T	**FDEM3546T**	1,260	FD3	12.31	38	85.5	230/460	1.5	1, 30
1 1/2	1800	56	**FDEM3554**	1,271	FD3	13.23	41	86.5	230/460	2.2	1, 30
		145T	**FDEM3554T**	1,296	FD3	13.31	41	86.5	230/460	2.2	1, 30
2	1800	56	**FDEM3558**	1,303	FD3	13.23	45	86.5	230/460	2.9	1, 30
		145T	**FDEM3558T**	1,342	FD3	13.31	45	86.5	230/460	2.9	1, 30
3	3600	182T	**FDEM3610T**	1,541	FD3	16.52	64	87.5	230/460	3.5	1, 30
	1800	182T	**FDEM3611T**	1,487	FD3	16.55	70	89.5	230/460	4.2	1, 30
5	3600	184T	**FDEM3613T**	1,726	FD3	16.55	74	88.5	230/460	5.9	1, 30
	1800	184T	**FDEM3615T**	1,624	FD3	18.05	93	89.5	230/460	6.7	1, 30
7 1/2	3600	213T	**FDEM3709T**	2,577	FD3	17.89	121	89.5	230/460	9	1, 30
	1800	213T	**FDEM3710T**	2,337	FD3	19.02	127	91.7	230/460	9.4	1, 30
10	3600	215T	**FDEM3711T**	2,612	FD3	17.89	118	90.2	230/460	11.8	1, 30
	1800	215T	**FDEM3714T**	2,633	FD3	20.52	165	91.7	230/460	12	1, 30
15	3600	254T	**FDEM2394T**	4,426	FD3	23.66	254	91	230/460	17.5	1, 30
	1800	254T	**FDEM2333T**	4,057	FD3	23.66	270	92.4	230/460	18.1	1, 30
20	3600	256T	**FDEM4106T**	4,853	FD3	23.66	271	91	230/460	23	1, 30
	1800	256T	**FDEM2334T**	4,904	FD3	23.66	300	93	230/460	24	1, 30
25	3600	284TS	**FDEM4107T**	6,326	FD3	24.71	323	91.7	230/460	29	1, 30
	1800	284T	**FDEM4103T**	6,410	FD3	27.76	380	93.6	230/460	30	1, 30
30	3600	286TS	**FDEM4108T**	7,501	FD3	24.71	323	91.7	230/460	34	1, 30
	1800	286T	**FDEM4104T**	7,588	FD3	27.76	425	93.6	230/460	38	1, 30
40	3600	324TS	**FDEM4109T**	10,334	FD3	28.78	528	92.4	230/460	46	1, 30
	1800	324T	**FDEM4110T**	9,982	FD3	30.28	567	94.1	230/460	48	1, 30
50	3600	326TS	**FDEM4114T**	11,290	FD3	28.78	575	93	230/460	56	1, 30
	1800	326T	**FDEM4115T**	10,891	FD3	30.28	610	94.5	230/460	58	1, 30
60	1800	364T	**FDEM4314T**	15,638	FD3	33.48	910	95	230/460	67.8	1, 30
75	1800	365T	**FDEM4316T**	18,232	FD3	33.48	977	95.4	230/460	84.9	1, 30
100	1800	405T	**FDEM4400T**	22,698	FD3	38.19	1,326	95.4	230/460	112	1, 30
C-Face, footless											
1/2	1800	56C	**VFDM3538**	848	FD3	11.35	24	74	230/460	1.0	1, 30
3/4	1800	56C	**VFDM3542**	917	FD3	11.35	27	75.5	230/460	1.5	1, 30
1	1800	56C	**VFDEM3546**	1,222	FD3	12.23	37	85.5	230/460	1.5	1, 30
1 1/2	1800	56C	**VFDEM3554**	1,251	FD3	13.23	41	86.5	230/460	2.2	1

(a) See notes on inside back flap.

Cast iron frame

Super-E®, three phase, TEFC

Hp	RPM	NEMA Frame	Catalog Number	List Price	Disc. Sym.	"C" Dim.	Aprx. Wt. (lb)	Full Load Efficiency	Voltage	Full Load Amps	Notes (a)
575 volt											
1	1800	56	**FDEM3546-5**	1,243	FD3	12.23	37	85.5	575	1.2	
		143T	**FDEM3546T-5**	1,260	FD3	12.31	37	85.5	575	1.2	
1 1/2	1800	56	**FDEM3554-5**	1,271	FD3	13.23	41	86.5	575	1.8	
		145T	**FDEM3554T-5**	1,296	FD3	13.31	41	86.5	575	1.8	
2	1800	56	**FDEM3558-5**	1,303	FD3	13.23	45	86.5	575	2.3	
		145T	**FDEM3558T-5**	1,342	FD3	13.31	45	86.5	575	2.3	
3	3600	182T	**FDEM3610T-5**	1,541	FD3	15.14	50	86.5	575	2.9	
	1800	182T	**FDEM3611T-5**	1,487	FD3	16.55	73	89.5	575	3.3	
5	3600	184T	**FDEM3613T-5**	1,726	FD3	16.55	74	88.5	575	4.7	
	1800	184T	**FDEM3615T-5**	1,624	FD3	18.05	93	89.5	575	5.3	
7 1/2	3600	213T	**FDEM3709T-5**	2,577	FD3	17.89	121	89.5	575	7	
	1800	213T	**FDEM3710T-5**	2,337	FD3	19.02	129	91.7	575	7.5	
10	3600	215T	**FDEM3711T-5**	2,612	FD3	17.89	121	90.2	575	9.5	
	1800	215T	**FDEM3714T-5**	2,633	FD3	20.52	165	92.4	575	10	
15	3600	254T	**FDEM2394T-5**	4,426	FD3	23.66	239	91.0	575	13.7	
	1800	254T	**FDEM2333T-5**	4,057	FD3	23.66	268	92.4	575	14.6	
20	3600	256T	**FDEM4106T-5**	4,853	FD3	23.66	229	91.0	575	18	
	1800	256T	**FDEM2334T-5**	4,904	FD3	23.66	322	93.0	575	19.2	
25	3600	284TS	**FDEM4107T-5**	6,326	FD3	24.70	317	91.7	575	23	
	1800	284T	**FDEM4103T-5**	6,410	FD3	27.76	447	93.6	575	25	
30	3600	286TS	**FDEM4108T-5**	7,501	FD3	24.70	317	91.7	575	28	
	1800	286T	**FDEM4104T-5**	7,588	FD3	27.76	461	93.6	575	31	
40	3600	324TS	**FDEM4109T-5**	10,334	FD3	28.78	553	92.4	575	37	
	1800	324T	**FDEM4110T-5**	9,982	FD3	30.28	605	94.1	575	39	
50	3600	326TS	**FDEM4114T-5**	11,290	FD3	28.78	595	93.0	575	45	
	1800	326T	**FDEM4115T-5**	10,891	FD3	30.28	695	94.5	575	46	
60	1800	364T	**FDEM4314T-5**	15,638	FD3	33.48	965	95.0	575	54.7	
75	1800	365T	**FDEM4316T-5**	18,232	FD3	33.49	965	95.4	575	68.7	
100	1800	405T	**FDEM4400T-5**	22,698	FD3	38.19	1,326	95.4	575	89.6	

(a) See notes on inside back flap.

Cast iron frame

Single phase, TEFC

1/3 thru 16 Hp

IP54

Features:

- Lubed for life double sealed ball bearings
- Lip seal and V-Ring slinger on DE for increased moisture resistance
- Gasketed manual reset thermal overload protection

Applications:

- Agri-duty
- Industrial fans
- General purpose farm
- Industrial pumps

Hp	RPM	NEMA Frame	Catalog Number	List Price	Disc. Sym.	"C" Dim.	Aprx. Wt. (lb)	Full Load Efficiency	Voltage	Full Load Amps	Notes (a)
Foot mounted											
1/3	1800	56	**FDL3501M**	746	FD1	11.35	23	60	115/230	3	13, 30
1/2	1800	56	**FDL3504M**	871	FD1	11.97	28	68	115/230	3.7	12, 30
3/4	1800	56	**FDL3507M**	1,023	FD1	13.35	37	74	115/230	4.4	12
1	1800	56H	**FDL3510M**	1,158	FD1	12.93	41	67	115/230	6.5	30
		143T	**FDL3510TM**	1,158	FD1	13.29	40	67	115/230	6.5	30
1 1/2	1800	56H	**FDL3514M**	1,303	FD1	13.91	49	80	115/230	6.2	2
		145T	**FDL3514TM**	1,306	FD1	14.17	51	80	115/208-230	6.2	2
C-Face, foot mounted											
1/2	1800	56C	**CFDL3504M**	1,144	FD1	11.97	28	68	115/230	3.7	12, 30
3/4	1800	56C	**CFDL3507M**	1,329	FD1	13.35	39	74	115/230	4.4	12
1	1800	56CH	**CFDL3510M**	1,500	FD1	13.25	47	67	115/230	6.5	30
1 1/2	1800	56CH	**CFDL3514M**	1,686	FD1	14.12	51	80	115/208-230	6.2	2
2	1800	56CHZ	**CFDL3516TM**	2,137	FD1	14.13	53	82.5	230	7.9	1
C-Face, footless											
1/3	1800	56C	**VFDL3501M**	963	FD1	11.35	23	60	115/230	3	13, 30
1/2	1800	56C	**VFDL3504M**	1,103	FD1	11.97	27	68	115/230	3.7	12, 30
3/4	1800	56C	**VFDL3507M**	1,284	FD1	13.35	44	74	115/230	4.4	12
1	1800	56C	**VFDL3510M**	1,452	FD1	13.25	40	67	115/230	6.5	30
1 1/2	1800	56C	**VFDL3514M**	1,645	FD1	14.12	48	80	115/208-230	6.2	2
Foot mounted, extra high torque											
2	1800	56HZ	**FDL3516TM**	1,843	FD1	14.19	51	82.5	230	7.9	1
		182T	**FDL3611TM**	2,078	FD1	16.55	77	75	115/230	14	2
		184	**FDL3611M**	2,132	FD1	15.67	76	74	115/230	12.4	2
3	1800	184	**FDL3610M**	2,531	FD1	17.18	90	80	230	15.5	2, 20
		184T	**FDL3610TM**	2,470	FD1	18.05	90	80	230	15.5	2, 20
		184T	**FDL3619TM**	1,989	FD1	16.54	82	81.5	230	13.2	2, 20
5	1800	184T	**FDL3612TM**	2,592	FD1	18.05	100	80	230	23	2, 20
		215	**FDL3731M**	3,185	FD1	18.65	126	84	230	20.5	2, 20
7 1/2	1800	213	**FDL3732M**	3,665	FD1	18.65	147	84	230	30	2, 20
		213T	**FDL3733TM**	3,374	FD1	19.02	146	84	230	30	2, 20
10	1800	215T	**FDL3712TM**	3,708	FD1	20.77	160	84	230	40	2, 20, 89
		215T	**FDL3737TM**	3,947	FD1	21.27	169	86.5	230	39	2, 20, 89
16	1800	256T	**FDL3912T**	5,722	FD1	24.56	290	86.5	208-230	58	2,20
		256T	**FDL1177T**	7,565	FD1	23.28	322	87.5	208-230	61	2,20
C-Face, footless, extra high torque											
2	1800	145TC	**VFDL3516TM**	2,137	FD1	14.17	53	82.5	230	7.9	1, 20
3	1800	184TC	**VFDL3610TM**	2,895	FD1	18.05	98	80	230	15.5	2, 20
5	1800	184TC	**VFDL3612TM**	3,535	FD1	18.33	101	80	230	23	2, 20
C-Face, footless, F-2, extra high torque											
2	1800	145TC	**VFDFL3516TM**	2,137	FD1	14.17	53	82.5	230	7.9	1, 20
3	1800	184TC	**VFDFL3610TM**	2,895	FD1	18.05	98	80	230	15.5	2, 20
5	1800	184TC	**VFDFL3612TM**	3,535	FD1	18.33	101	80	230	23	2, 20

(a) See notes on inside back flap. Cast iron frame

Single phase, TEAO, foot mounted

1/2 thru 1 1/2 Hp

IP54

Features:

- Lubed for life double sealed ball bearings
- Lip seal and V-Ring slinger on DE for increased moisture resistance
- MG1 Part 31.4.4.2

Applications:

- Industrial fans
- General purpose farm
- Industrial pumps

Hp	RPM	NEMA Frame	Catalog Number	List Price	Disc. Sym.	"C" Dim.	Aprx. Wt. (lb)	Full Load Efficiency	Voltage	Full Load Amps	Notes (a)
1/2	1800	56H	**FDAOL3504A**	799	FD1	12.08	32	78.5	115/230	2.4	30
3/4	1800	56H	**FDAOL3507A**	873	FD1	12.08	35	74	115/230	4.1	30
1	1800	56H	**FDAOL3521A**	947	FD1	11.80	39	78.5	115/208-230	4.7	
1 1/2	1800	56H	**FDAOL3532A**	1,115	FD1	12.68	50	75.5	115/208-230	8	

(a) See notes on inside back flap.

Grain dryer/centrifugal fan, single and three phase, TEFC and ODP

3 thru 50 Hp

Open IP22 | Enclosed IP54

Features:

- Shaft length 1" longer than NEMA standard
- Lubed for life double sealed ball bearings
- Lip seal and V-Ring slinger on DE for increased moisture resistance
- Screens on ODP to protect against trash and debris

Applications:

- High pressure grain drying
- Farm building fans

Hp	RPM	NEMA Frame	Catalog Number	List Price	Disc. Sym.	"C" Dim.	Aprx. Wt. (lb)	Full Load Efficiency	Voltage	Full Load Amps	Notes (a)
Single phase, open drip proof											
5	1800	184TZ	**GDL1605T**	2,673	FD1	19.06	97	80	230	22.5	2, 20
7 1/2	1800	215TZ	**GDL1607T**	3,516	FD1	22.57	142	82.5	230	32	1, 20
10	1800	215TZ	**GDL1610T**	4,067	FD1	22.85	160	84	230	40	2, 20
16	1800	256TZ	**GDL1615T**	6,052	FD1	24.19	271	86.5	208-230	62	2, 20
Single phase, totally enclosed fan cooled											
7 1/2	1800	215TZ	**GDL3770T**	4,395	FD1	19.45	198	85.5	230	29.6	1
10	1800	215TZ	**GDL3774T**	5,083	FD1	19.45	210	86.5	230	38	2, 20
16	1800	256TZ	**GDL2333T**	7,565	FD1	24.28	310	88.5	208-230	60	2, 20
Three phase, open drip proof											
5	1800	184TZ	**EGDM3218T**	1,767	FD3	17.50	92	89.5	230/460	6.6	1, 30
		184TZ	**GDM3218T**	1,479	FD3	16.00	68	87.5	208-230/460	7.2	16
7 1/2	1800	213TZ	**EGDM3311T**	2,590	FD3	17.32	120	91	230/460	9.7	1, 30
		213TZ	**GDM3311T**	2,098	FD3	18.00	92	88.5	208-230/460	9.9	16
10	1800	215TZ	**EGDM3313T**	3,069	FD3	18.45	132	91.7	230/460	12.5	1, 30
		215TZ	**GDM3313T**	2,542	FD3	17.32	116	89.5	208-230/460	13.4	16
15	1800	254TZ	**EGDM2513T**	4,248	FD3	22.69	239	93	230/460	17.7	1, 30
		254TZ	**GDM2513T**	3,129	FD3	21.00	156	91	208-230/460	19	1, 16
20	1800	256TZ	**EGDM2515T**	4,917	FD3	22.69	245	93	230/460	23.5	1, 30
		256TZ	**GDM2515T**	4,120	FD3	23.25	187	91.7	230/460	24	16, 30
25	1800	284TZ	**EGDM2531T**	6,079	FD3	26.06	375	93.6	230/460	30	1, 30
		284TZ	**GDM2531T**	5,062	FD3	24.44	245	91.7	230/460	31	16, 30
30	1800	286TZ	**EGDM2535T**	6,801	FD3	26.06	382	94.1	230/460	35	1, 30
		286TZ	**GDM2535T**	5,887	FD3	25.94	281	92.4	230/460	36	16, 30
Three phase, totally enclosed fan cooled											
3	1800	182TZ	**EGDM3661T**	2,266	FD3	16.98	105	89.5	230/460	4.1	1, 30
5	1800	184TZ	**EGDM3615T**	2,317	FD3	19.05	95	89.5	230/460	6.7	1, 30
		184TZ	**GDM3615T**	1,782	FD3	17.55	80	87.5	208-230/460	6.8	1, 16
		184TZ	**EGDM3665T**	2,582	FD3	16.98	119	89.5	230/460	6.6	1, 30
7 1/2	1800	213TZ	**EGDM3710T**	2,852	FD3	20.03	127	91.7	230/460	9.4	1, 30
		213TZ	**GDM3710T**	2,233	FD3	18.90	117	89.5	208-230/460	10.1	1, 16
		213TZ	**EGDM3770T**	3,176	FD3	19.45	170	91.7	230/460	9.5	1, 30
10	1800	215TZ	**EGDM3714T**	4,141	FD3	21.53	165	91.7	230/460	12	1, 30
		215TZ	**GDM3714T**	3,563	FD3	20.03	131	89.5	208-230/460	13.5	1, 16
		215TZ	**EGDM3774T**	4,570	FD3	19.45	231	91.7	230/460	12.5	1, 30
15	1800	254TZ	**EGDM2333T**	5,587	FD3	24.66	255	92.4	230/460	18.1	1, 30
		254TZ	**GDM2333T**	4,723	FD3	22.07	231	89.5	208-230/460	18.9	1, 16
20	1800	256TZ	**EGDM2334T**	5,915	FD3	24.66	303	93	230/460	24	1, 30
		256TZ	**GDM2334T**	5,050	FD3	23.83	245	91	230/460	25	1, 16, 30
25	1800	284TZ	**EGDM4103T**	7,448	FD3	28.76	422	93.6	230/460	30	30
		284TZ	**GDM4103T**	7,176	FD3	26.93	345	92.4	230/460	29	1, 16, 30
30	1800	286TZ	**EGDM4104T**	8,731	FD3	28.76	460	93.6	230/460	38	30
		286TZ	**GDM4104T**	8,459	FD3	26.93	366	92.4	230/460	36	1, 16, 30
40	1800	324TZ	**EGDM4110T**	11,576	FD3	31.28	578	94.1	230/460	48	30
		324TZ	**GDM4110T**	11,288	FD3	31.28	497	93	230/460	47	1, 16, 30
50	1800	326TZ	**EGDM4115T**	11,973	FD3	31.28	608	94.5	230/460	58	30
		326TZ	**GDM4115T**	11,685	FD3	31.28	552	91	230/460	60	1, 16, 30

(a) See notes on inside back flap.

Cast iron frame

Grain dryer/vane axial fan, single and three phase, TEAO and OPAO

1 1/2 thru 15 Hp

Open IP22 | **Enclosed IP54**

Features:

- Shaft length 3/4" longer than NEMA standard
- 1/4-20 tapped and keyed shaft
- Convenient lead location for ease of conduit connectivity
- Normally closed winding thermostats to protect against overheating
- Lubed for life double sealed ball bearings on TEAO motors
- Lip seal and V-Ring slinger on DE for increased moisture resistance on TEAO motors

Applications:

- Vane axial fan crop dryers

Hp	RPM	NEMA Frame	Catalog Number	List Price	Disc. Sym.	"C" Dim.	Aprx. Wt. (lb)	Full Load Efficiency	Voltage	Full Load Amps	Notes (a)
Single phase, totally enclosed air over											
1.5 - 3	3600	145TZ	**UCLE153**	1,775	FD1	14.25	52	85.5	230	12.5	1, 30
3 - 4.5	3600	145TZ	**UCLE3145**	1,818	FD1	15.62	61	82.5	230	12.5	2, 20
5 - 7.5	3600	182TZ	**UCLE570**	2,213	FD1	16.88	93	84	230	20.5	2, 8
7.5 - 10	3600	182TZ	**UCLE7510**	2,393	FD1	16.88	95	85.5	230	38	2, 20, 30
10 - 15	3600	215Z	**UCLE1015**	3,708	FD1	18.56	167	89	230	46	2, 20
Single phase, open air over											
3 - 4.5	3600	145TZ	**UCL3145**	1,717	FD1	15.62	59	77.8	230	14.3	2, 20
		5 - 7.5	**UCL345**	1,788	FD1	14.88	72	74	230	22	2, 20
7.5 - 10	3600	182TZ	**UCL570**	2,113	FD1	16.88	91	80	230	35	2, 20
7,5 - 10.5	3600	182TZ	**UCL710**	2,266	FD1	16.88	89	85	230	31	2, 20
10 - 15	3600	215Z	**UCL7510**	2,868	FD1	17.44	107	81	230	37	2, 20
10 - 15	3600	215Z	**UCL1015**	3,675	FD1	17.81	137	84	230	44	2, 20
Three phase, totally enclosed air over											
1,5 - 3	3600	145TZ	**UCME153**	1,248	FD3	13.37	39	80	208-230/460	4.1	2, 20
3 - 4.5	3600	143TZ	**UCME3145**	1,319	FD3	13.37	46	84.5	208-230/460	6	2, 8
5 - 7.5	3600	184TZ	**UCME570**	1,657	FD3	15.38	69	84	230/460	9	2, 20, 30
7.5 - 10	3600	184TZ	**UCME7510**	1,943	FD3	16.88	85	86.5	230/460	11.5	2, 20, 30
7.5 - 9.2	3600	184TZ	**UCME759**	1,943	FD3	16.88	84	89.5	208-230/460	8.5	2, 20
10 - 14	3600	215Z	**UCME1014**	2,482	FD3	16.69	124	87.5	208-230/460	16.5	2, 20
Three phase, open air over											
5 - 7.5	3600	184TZ	**UCM575**	1,563	FD3	15.38	66	84	230/460	9.5	2, 20
7.5 - 10	3600	184TZ	**UCM713**	1,869	FD3	16.88	89	84	208-230/460	12	2
10 - 15	3600	215Z	**UCM1014**	2,402	FD3	16.69	102	85.5	208-230/460	18	2, 20

(a) See notes on inside back flap.

Universal crop dryer, single phase, PSC (switchless), OPAO

5 thru 15 Hp

IP22

Features:

- Shaft length 3/4" longer than NEMA standard
- 1/4-20 tapped and keyed shaft
- Convenient lead location for ease of conduit connectivity
- Switchless design for increased reliability
- Lubed for life double shielded ball bearings
- Normally closed winding thermostats to protect against overheating

Applications:

- Vane axial fan crop dryers

Hp	RPM	NEMA Frame	Catalog Number	List Price	Disc. Sym.	"C" Dim.	Aprx. Wt. (lb)	Full Load Efficiency	Voltage	Full Load Amps	Notes (a)
Open air over											
5 - 7.5	3600	184TZ	**UCC5700**	1,894	FD1	15.38	74	79	230	19.5	
7.5 - 10	3600	184TZ	**UCC7100**	2,081	FD1	16.88	78	85.5	230	28	
10 - 15	3600	215Z	**UCC10150**	3,934	FD1	18.57	127	83	230	41	

(a) See notes on inside back flap.

Auger drive, single phase, TEFC, flange mount, capacitor start

1/3 thru 1 1/2 Hp

IP44

Features:

- Mechanically protected centrifugal switch from over speeding
- Extended opposite DE shaft for manual jog
- Gasketed manual reset thermal overload protection
- Lubed for life double shielded ball bearings
- NEMA 56N flange for industry standard drive/gear connection

Applications:

- Poultry feed auger drive systems

Hp	RPM	NEMA Frame	Catalog Number	List Price	Disc. Sym.	"C" Dim.	Aprx. Wt. (lb)	Full Load Efficiency	Voltage	Full Load Amps	Notes (a)
1/3	1800	48YZ	**ANFL3501M**	904	FD1	12.44	24	60	115/230	3	12, 30
1/2	1800	48YZ	**ANFL3504M**	1,014	FD1	12.44	28	68	115/230	3.7	12, 30
3/4	1800	48YZ	**ANFL3507M**	1,182	FD1	13.32	34	74	115/230	4.1	12, 30
1	1800	56YZ	**ANFL3510M**	1,459	FD1	13.55	41	67	115/230	6.5	30
1 1/2	1800	56YZ	**ANFL3514M**	2,165	FD1	14.43	49	75.5	115/230	9	2, 30

(a) See notes on inside back flap.

Grain stirring, single phase, TEFC, foot mounted

1 1/2 Hp

IP44

Features:

- Slotted fan cover on DE to prevent clogging
- Gasketed manual reset thermal overload protection
- Lubed for life double shielded ball bearings

Applications:

- Inside bin grain stirring systems

Hp	RPM	NEMA Frame	Catalog Number	List Price	Disc. Sym.	"C" Dim.	Aprx. Wt. (lb)	Full Load Efficiency	Voltage	Full Load Amps	Notes (a)
1 1/2	1800	56Z	**GSL3509M**	1,278	FD1	12.29	41	80	208-230	6.4	

(a) See notes on inside back flap.

Instant reversing, single phase, TEFC, foot mounted

1/3 thru 1 Hp

IP44

Features:

- High starting torque
- Electrically designed for optimal performance in instant reversing applications
- Gasketed manual reset thermal overload protection
- Lubed for life double shielded ball bearings

Applications:

- Barn cleaners
- Bulk feeders
- Mechanical gates/doors
- Hoists

Hp	RPM	NEMA Frame	Catalog Number	List Price	Disc. Sym.	"C" Dim.	Aprx. Wt. (lb)	Full Load Efficiency	Voltage	Full Load Amps	Notes (a)
1/3	1800	56	**IR3501M**	848	FD1	11.35	25	60	115/208-230	3	2
1/2	1800	56	**IR3504M**	975	FD1	11.97	28	68	115/208-230	3.7	2
3/4	1800	56Y	**IR3507M**	1,115	FD1	13.25	40	70	115/208-230	4.6	2
1	1800	56	**IR3510M**	1,207	FD1	13.25	40	65	230	6.2	1

(a) See notes on inside back flap.

Aeration fan, single and three phase, TEAO, foot mounted

1/2 thru 3 Hp

IP44

Features:

- 1/4-20 tapped and keyed shaft
- Terminal panel for ease of connectivity
- Automatic thermal overload protection (single phase)
- Normally closed winding thermostats to protect against overheating (three phase)
- Lubed for life double shielded ball bearings

Applications:

- Aeration fans for grain storage
- Exhaust fans
- Air handling systems

Hp	RPM	NEMA Frame	Catalog Number	List Price	Disc. Sym.	"C" Dim.	Aprx. Wt. (lb)	Full Load Efficiency	Voltage	Full Load Amps	Notes (a)
Single phase											
1/2	1800	56	**AFL3504A**	626	FD1	11.58	32	78.5	115/230	2.3	2
3/4	3600	56Z	**AFL3520A**	657	FD1	11.59	29	71	115/230	5.5	2
1	3600	56	**AFL3521A**	774	FD1	12.68	39	66	115/230	6	2
1	1800	56	**AFL3510A**	906	FD1	12.68	47	77	115/230	4.8	2
1 1/2	3600	56	**AFL3525A**	1,001	FD1	12.68	42	70	115/230	8.3	2, 30
		143TZ	**AFL3522A**	1,072	FD1	12.74	43	70	115/230	8.3	2, 30
2	3600	143TZ	**AFL3523A**	1,309	FD1	13.61	51	74	115/230	11.5	2
3	3600	145TZ	**AFL3524A**	1,365	FD1	13.61	52	78	230	15	2
Three phase											
3/4	3600	56Z	**AFM3528**	665	FD3	10.97	24	74	230/460	1.3	30
1	3600	56Z	**AFM3529**	723	FD3	10.97	22	75.5	230/460	1.8	30
1 1/2	3600	143TZ	**AFM3530**	835	FD3	12.45	30	80	208-230/460	2.3	
3	3600	145T	**AFM3532**	1,107	FD3	12.74	45	82.5	208-230/460	3.8	2

(a) See notes on inside back flap.

(PSC) – direct drive fan, single phase, TEAO

1/4 thru 1 Hp

IP44

Features:

- Switchless design for increased reliability
- 1" extended through bolts for grille mounting
- Terminal panel for ease of connectivity
- Automatic thermal overload protection
- Lubed for life double shielded ball bearings

Applications:

- Confinement houses
- Exhaust fans
- Air handling fans
- Unit heaters

Hp	RPM	NEMA Frame	Catalog Number	List Price	Disc . Sym.	"C" Dim.	Aprx. Wt. (lb)	Full Load Efficiency	Voltage	Full Load Amps	Notes (a)
1/4	1800	48Z	**CHC3413A**	657	FD1	11.35	22	54	115/230	2.4	2, 29
1/3	1800	48Z	**CHC3416A**	715	FD1	11.97	25	56	115/230	2.8	2, 29
	1200	48Z	**CHC3417A**	894	FD1	11.97	26	54	115/230	2.8	2, 29
1/2	1800	56	**CHC3504A**	799	FD1	11.59	25	72	115/230	2.6	30
	1200	56Z	**CHC3525A**	1,026	FD1	13.54	40	70	115/230	2.6	2, 74
	900	56Z	**CHC3526A**	1,270	FD1	14.42	50	50	115/230	4.6	2, 74
1	1800	56H	**CHL3510A**	865	FD1	12.42	47	78	115/230	4.8	30

(a) See notes on inside back flap.

Dairy/vacuum pump, single phase, TEFC, foot mounted

7 1/2 thru 10 Hp

IP44

Features:

- Gasketed manual reset thermal overload protection
- Oversized conduit/capacitor box for ease of connectivity
- Aluminum heat sync fan on DE for increased bearing life

Applications:

- Vacuum pumps dairy industry

Hp	RPM	NEMA Frame	Catalog Number	List Price	Disc. Sym.	"C" Dim.	Aprx. Wt. (lb)	Full Load Efficiency	Voltage	Full Load Amps	Notes (a)
7 1/2	1800	215T	**DEL3733TM**	5,111	FD1	20.77	162	85	230	28	1
10	1800	215T	**DEL3737TM**	6,243	FD1	21.27	160	86.5	230	39	8, 89

(a) See notes on inside back flap.

Metering pump, three phase, TEFC, foot mounted
1/3 Hp

IP44

Features:
- F3 conduit box location for optimal mounting clearance
- Lubed for life double shielded ball bearings
- 60 & 50 Hz data included for connection at either frequency

Applications:
- Metering pump systems

Hp	RPM	NEMA Frame	Catalog Number	List Price	Disc. Sym.	"C" Dim.	Aprx. Wt. (lb)	Voltage	Full Load Amps	Notes (a)
1/3	1800	48	**MPM3458**	644	FD1	10.72	20	230/460	0.8	2

(a) See notes on inside back flap.

Incubator/hatchery vent fan, single phase, TEAO
1/3 Hp

IP44

Features:
- Normally closed winding thermostats to protect against overheating
- 1" extended through bolts for grille mounting
- Terminal panel for ease of connectivity
- Pilot Circuit to facilitate system protection
- Flat slinger on DE for improved moisture protection
- Lubed for life double shielded ball bearings

Applications:
- Incubator/hatchery fans
- HVAC condensers
- Grille mount vent fan applications

Hp	RPM	NEMA Frame	Catalog Number	List Price	Disc. Sym.	"C" Dim.	Aprx. Wt. (lb)	Voltage	Full Load Amps	S.F.	Notes (a)
1/3	1800	48Z	**HIC264A**	593	FD1	10.09	20	115/230	1.9	1.00	
		48Z	**HIC274A**	593	FD1	10.09	20	115/230	2.2	1.00	

(a) See notes on inside back flap.

Ammonia refrigeration compressor motors, three phase, ODP, 460 volt, foot mounted

150 thru 500 Hp

IP22

Standard 460 Volt motor

Features:

- Low noise design
- 1.15 SF
- Meet or exceed all efficiency requirements for US, Canada and Mexico regulations
- Rated for across the line start
- Class F insulation with Class B temp rise
- Cast iron frame for reduced vibration and increased strength

Applications:

- Ammonia refrigeration compressors
- Pumps

Hp	RPM	NEMA Frame	Catalog Number	List Price	Disc. Sym.	"C" Dim.	Aprx. Wt. (lb)	Full Load Efficiency	Voltage	Full Load Amps	Notes (a)
460 volts (wye start delta run)											
150	3600	404/5TS	**EM251152T-4**	21,599	DPC	31.00	1140	95.4	460	167	1,10
200	3600	444/5TS	**EM251202T-4**	24,476	DPC	35.81	1737	95.4	460	221	1,10
250	3600	444/5TS	**EM251252T-4**	28,713	DPC	35.81	1539	95.4	460	274	1,10
300	3600	447TSS/TS	**EM251302T-4**	44,878	DPC	39.31	1899	95.4	460	334	1,10
350	3600	447TSS/TS	**EM251352T-4**	51,360	DPC	39.31	1899	95.4	460	381	1,10
400	3600	449TS	**EM251402T-4**	60,255	DPC	44.31	4000	96.2	460	431	1,10
450	3600	449TS	**EM251452T-4**	66,351	DPC	44.31	4000	96.2	460	494	1,10
500	3600	449TS	**EM251502T-4**	73,356	DPC	39.37	2595	96.2	460	544	1,10

(a) See notes on inside back flap.
Cast iron frame
Contact your sales representative for additional information.
Conversion base kits are available in the Motor Accessories section.

Three phase, two speed, TEFC, foot mounted

1/2 thru 25 Hp

IP54

Features:

- Dual speed ratings
- High performance ball bearings
- Dynamically balanced rotor
- Heavy duty steel or cast-iron frame

Applications:

- Fans
- Blowers
- Machine tools
- Hoists
- Conveyors
- Pumps

Hp	RPM	NEMA Frame	Catalog Number	List Price	Disc. Sym.	"C" Dim.	Aprx. Wt. (lb)	Voltage	Full Load Amps	Notes (a)
Constant torque, one winding										
1/.5	1800/900	143T	**M1504T**	2,154	DP2	13.31	39	208-230	2.8	10, 71
1.5/.75	1800/900	145T	**M1505T**	2,276	DP2	14.19	47	230	4.1	8, 10, 71
2/1	1800/900	184T	**M1506T**	2,763	DP2	16.54	64	208-230	5.5	10, 71
3/1.5	1800/900	184T	**M1507T**	3,129	DP2	18.04	84	230	8.3	1, 10, 71
5/2.5	1800/900	215T	**M1508T**	4,087	DP2	19.01	134	208-230	13	1, 10, 71
7.5/3.8	1800/900	215T	**M1509T**	5,320	DP2	20.51	185	230	18.9	1, 10, 71
Constant torque, one winding, 460V										
1/.5	1800/900	143T	**M1704T**	2,154	DP2	14.19	45	460	1.4	71
1.5/.75	1800/900	145T	**M1705T**	2,276	DP2	14.19	47	460	2.1	8, 71
2/1	1800/900	184T	**M1706T**	2,763	DP2	16.54	65	460	2.8	71
3/1.5	1800/900	184T	**M1707T**	3,129	DP2	18.04	84	460	4.2	1, 71
5/2.5	1800/900	215T	**M1708T**	4,087	DP2	19.01	132	460	6.5	1, 71
7.5/3.8	1800/900	215T	**M1709T**	5,320	DP2	20.51	181	460	9.4	1, 71
10/5	1800/900	254T	**M1710T**	8,195	DP2	23.28	263	460	13	1, 71
15/7.5	1800/900	256T	**M1711T**	9,488	DP2	23.28	267	460	19.2	1, 71
20/10	1800/900	284T	**M1712T**	12,055	DP2	27.76	378	460	25	1, 10, 71
25/13	1800/900	286T	**M1713T**	14,634	DP2	27.76	397	460	29	1, 10, 71
Variable torque, one winding										
1/.25	1800/900	143T	**M1554T**	1,518	DP2	12.31	33	208-230	3	10, 71
1.5/.38	1800/900	145T	**M1555T**	1,579	DP2	13.31	41	208-230	4.8	10, 71
2/.5	1800/900	145T	**M1556T**	1,834	DP2	13.31	41	208-230	6.1	10, 71
3/.75	1800/900	184T	**M1557T**	1,971	DP2	16.54	65	208-230	8	10, 71
5/1.3	1800/900	184T	**M1558T**	2,508	DP2	18.04	83	208-230	13.5	8, 10, 71
Variable torque, one winding, 460V										
1/.25	1800/900	143T	**M1754T**	1,518	DP2	12.31	33	460	1.7	1, 10, 71
1.5/.38	1800/900	145T	**M1755T**	1,579	DP2	13.31	38	460	2.3	1, 10, 71
2/.5	1800/900	145T	**M1756T**	1,834	DP2	14.19	45	460	3	1, 71
3/.75	1800/900	184T	**M1757T**	1,971	DP2	16.54	63	460	4	71
5/1.3	1800/900	184T	**M1758T**	2,508	DP2	18.04	84	460	6.7	1, 71
7.5/1.9	1800/900	215T	**M1759T**	3,532	DP2	19.01	136	460	9.3	1, 71
10/2.5	1800/900	215T	**M1760T**	4,161	DP2	20.52	158	460	12.5	8, 71
15/3.75	1800/900	254T	**M1761T**	5,752	DP2	23.28	247	460	19.6	71
20/5	1800/900	284T	**M1762T**	6,799	DP2	27.76	344	460	26	1, 71
25/6.3	1800/900	286T	**M1763T**	7,889	DP2	27.76	384	460	32	71

(a) See notes on inside back flap.
Cast iron frame

Three phase, two speed, TEFC, foot mounted

Hp	RPM	NEMA Frame	Catalog Number	List Price	Disc. Sym.	"C" Dim.	Aprx. Wt. (lb)	Voltage	Full Load Amps	Notes (a)
Variable torque, two windings										
.75/.33	1800/1200	56	**M1519**	1,680	DP2	13.23	37	230	2.8	10, 71
1/.44	1800/1200	145T	**M1520T**	1,754	DP2	13.31	42	208-230	3.1	1, 10, 71
1.5/.67	1800/1200	182T	**M1521T**	2,165	DP2	15.17	58	208-230	4.4	1, 10, 71
2/.89	1800/1200	182T	**M1522T**	2,485	DP2	16.54	66	208-230	5.8	1, 10, 71
3/1.3	1800/1200	184T	**M1523T**	2,906	DP2	16.54	73	208-230	8	1, 10, 71
5/2.2	1800/1200	215T	**M1524T**	4,551	DP2	19.01	126	230	12.8	1, 10, 71
Variable torque, two windings, 460V										
.5/.22	1800/1200	56	**M1718**	1,566	DP2	12.23	29	460	1.1	1, 10, 71
.75/.33	1800/1200	56	**M1719**	1,731	DP2	12.23	33	460	1.4	1, 10, 12, 71
1/.44	1800/1200	145T	**M1720T**	1,754	DP2	13.31	35	460	1.6	1, 10, 71
1.5/.67	1800/1200	182T	**M1721T**	2,165	DP2	14.26	50	460	2.2	1, 71
2/.89	1800/1200	182T	**M1722T**	2,485	DP2	16.52	58	460	2.8	1, 10, 71
3/1.3	1800/1200	184T	**M1723T**	2,906	DP2	16.54	73	460	4	1, 71
5/2.2	1800/1200	215T	**M1724T**	4,551	DP2	19.01	128	460	6.4	1, 71
7.5/3.3	1800/1200	254T	**M1725T**	5,882	DP2	23.28	230	460	10.3	1, 10, 71
10/4.4	1800/1200	254T	**M1726T**	6,769	DP2	21.07	225	460	12.5	10, 71
15/6.7	1800/1200	284T	**M1727T**	8,034	DP2	27.76	355	460	19.3	1, 10, 71
20/8.9	1800/1200	286T	**M1728T**	10,893	DP2	27.76	390	460	27	1, 10, 71
25/11	1800/1200	324T	**M1729T**	11,474	DP2	30.28	512	460	30	1, 10, 71

(a) See notes on inside back flap.
Cast iron frame

Three phase, two speed, ODP, foot mounted

1/2 thru 25 Hp

IP22

Features:

- Dual speed ratings
- High performance ball bearings
- Dynamically balanced rotor
- Heavy duty steel or cast-iron frame

Applications:

- Fans
- Blowers
- Pumps

Hp	RPM	NEMA Frame	Catalog Number	List Price	Disc. Sym.	"C" Dim.	Aprx. Wt. (lb)	Voltage	Full Load Amps	Notes (a)
Variable torque, one winding										
1/.25	1800/900	143T	**M1004T**	1,446	DP2	11.12	33	208-230	3	1
1.5/.38	1800/900	145T	**M1005T**	1,503	DP2	12.13	38	208-230	4.4	1
2/.5	1800/900	145T	**M1006T**	1,736	DP2	12.13	41	230	6.1	1
3/.75	1800/900	184T	**M1007T**	1,864	DP2	13.62	56	208-230	8	1
5/1.3	1800/900	184T	**M1008T**	2,244	DP2	15.00	71	230	13.2	1
7.5/1.9	1800/900	215T	**M1009T**	3,206	DP2	16.32	113	230	20	1, 10
10/2.5	1800/900	215T	**M1010T**	3,634	DP2	17.45	133	208-230	25	1, 10
Variable torque, one winding, 460V										
1/.25	1800/900	143T	**M1204T**	1,446	DP2	11.12	33	460	1.5	1
1.5/.38	1800/900	145T	**M1205T**	1,503	DP2	12.13	37	460	2.2	1
2/.5	1800/900	145T	**M1206T**	1,736	DP2	12.13	41	460	3.1	1
3/.75	1800/900	184T	**M1207T**	1,864	DP2	13.62	56	460	4	1
5/1.3	1800/900	184T	**M1208T**	2,244	DP2	15.00	72	460	6.6	1
7.5/1.9	1800/900	215T	**M1209T**	3,206	DP2	16.32	112	460	10	1
10/2.5	1800/900	215T	**M1210T**	3,634	DP2	17.45	132	460	13	1
15/3.8	1800/900	254T	**M1211T**	5,105	DP2	21.69	206	460	20	1
20/5	1800/900	256T	**M1212T**	6,256	DP2	21.69	204	460	26	1
25/6.3	1800/900	284T	**M1213T**	7,341	DP2	23.81	330	460	34	1, 10
Variable torque, two windings										
.75/.33	1800/1200	56	**M1019**	1,553	DP2	12.07	36	230	2.8	
1/.44	1800/1200	145T	**M1020T**	1,673	DP2	12.13	41	230	3	1, 10
1.5/.67	1800/1200	182T	**M1021T**	2,027	DP2	13.62	55	208-230	4.4	1, 10
2/.89	1800/1200	182T	**M1022T**	2,312	DP2	15.00	64	230	5.8	1, 10
3/1.3	1800/1200	184T	**M1023T**	2,692	DP2	15.00	72	230	8	1
5/2.2	1800/1200	215T	**M1024T**	4,143	DP2	16.32	113	230	12.8	1, 10
Variable torque, two windings, 460V										
.5/.22	1800/1200	56	**M1218**	1,479	DP2	11.07	33	460	0.9	
.75/.33	1800/1200	56	**M1219**	1,553	DP2	12.07	36	460	1.4	1, 10
1/.44	1800/1200	145T	**M1220T**	1,673	DP2	12.13	41	460	1.9	
1.5/.67	1800/1200	182T	**M1221T**	2,027	DP2	13.62	55	460	2.2	1, 10
2/.89	1800/1200	182T	**M1222T**	2,312	DP2	15.00	65	460	3	1
3/1.3	1800/1200	184T	**M1223T**	2,692	DP2	15.00	72	460	4	1
5/2.2	1800/1200	215T	**M1224T**	4,143	DP2	16.32	113	460	6.4	1
7.5/3.3	1800/1200	256T	**M1225T**	5,510	DP2	22.25	148	460	9.9	1
10/4.4	1800/1200	256T	**M1226T**	6,223	DP2	22.25	172	460	12.7	1, 10
15/6.7	1800/1200	284T	**M1227T**	7,550	DP2	23.81	345	460	17.9	1, 10
20/8.9	1800/1200	286T	**M1228T**	10,125	DP2	23.81	330	460	24	1, 10

(a) See notes on inside back flap.

Pressure washer, single phase, TEFC and ODP

1 1/2 thru 5 Hp

ODP IP22 | TEFC IP54

Features:

- Manual thermal overload
- Capacitor start, capacitor run
- 1 1/2 horsepower designs rated at 14 amps or less on 115 volts
- UL and CSA recognized component approval

Applications:

- Pressure washers
- Steam cleaners

Hp	RPM	NEMA Frame	Catalog Number	List Price	Disc. Sym.	"C" Dim.	Aprx. Wt. (lb)	Full Load Efficiency	Voltage	Full Load Amps	Notes (a)
Totally enclosed fan cooled											
2	3600	56	**PL3515M**	1,327	DPS	13.23	42	77	115/230	8.8	1
	1800	56HZ	**L3516TM**	1,848	DPS	13.31	46	82.5	208-230	8.1	1, 57
3	3600	56	**PL3519M**	1,456	DPS	14.12	50	78	230	12.5	30
	1800	184T	**L3609TM**	2,040	DPS	16.54	79	78	115/230	14.5	2, 20
5	3600	184T	**L3608TM**	2,348	DPS	18.05	89	83	230	19.5	2, 20
	1800	184T	**L3612TM**	1,327	DPS	18.05	100	80	230	23	2, 20
Totally enclosed fan cooled, C-Face											
1 1/2	3600	56C	**PCL3513M**	1,174	DPS	13.25	38	75.5	115/230	6.6	
	1800	56C	**PCL3514M**	1,531	DPS	14.12	54	82.5	115/230	6	1
2	3600	56C	**PCL3515M**	1,393	DPS	13.24	43	77	115/230	8.8	1
	1800	145TC	**CL3516TM**	1,862	DPS	14.16	53	82.5	208-230	7.9	1
3	3600	56C	**PCL3519M**	1,526	DPS	14.12	52	78	230	12.5	30
	1800	184TC	**CL3619TM**	2,422	DPS	16.54	81	81.5	230	13.2	2, 20
5	3600	184TC	**CL3608TM**	2,625	DPS	18.05	92	83	230	19.5	2, 20
	1800	184TC	**CL3612TM**	2,539	DPS	18.05	102	80	230	23	2, 20
Open drip proof											
3	1800	184T	**L1408TM**	1,696	DPS	15.00	74	78	115/230	16	
5	3600	56/56H	**PL1327M**	1,414	DPS	13.81	56	74.2	230	23	2, 20, 30, 36, 98
	1800	184T	**L1410TM**	2,063	DPS	16.50	85	82.5	230	23	30
Open drip proof, C-Face											
2	1800	56C	**EPCL1322M**	1,619	DPS	14.32	66	84.5	115/230	8.2	1, 96
3	1800	184TC	**CL1408TM**	1,792	DPS	15.00	80	78	115/230	16	
5	3600	56HCY	**PCL1327M**	1,490	DPS	14.11	57	74.2	230	23	2, 20, 30, 36, 47, 98
	1800	184TC	**CL1410TM**	2,160	DPS	16.50	88	82.5	230	23	30

(a) See notes on inside back flap.

U-frame, three phase, TEFC

3/4 thru 20 Hp

IP54

Features:

- Fan cooled
- High performance ball bearings
- Heavy-gauge steel and cast-iron frames
- Exxon Polyrex™ EM grease
- U-Frame mounting dimensions

Applications:

- Pumps
- Compressors
- Fans
- Conveyors
- Machine tools

Hp	RPM	NEMA Frame	Catalog Number	List Price	Disc. Sym.	"C" Dim.	Aprx. Wt. (lb)	Full Load Efficiency	Voltage	Full Load Amps	Notes (a)
Totally enclosed foot mounted											
3/4	900	184	**M3602**	2,114	DPL	14.64	51	72	230/460	1.6	1, 30
1	1800	182	**EM3603**	1,788	DPL	13.76	38	85.5	230/460	1.5	1, 30
	1200	184	**EM3604**	2,279	DPL	13.76	41	82.5	230/460	1.8	1, 30
1 1/2	1800	184	**EM3606**	1,821	DPL	13.76	41	86.5	230/460	2.2	1, 30
	1200	184	**EM3607**	2,435	DPL	15.69	72	87.5	230/460	2.4	1, 30
2	1800	184	**EM3609**	1,922	DPL	13.76	45	86.5	230/460	2.9	1, 30
	1200	213	**EM3712**	2,752	DPL	18.17	97	88.5	230/460	3.5	1, 30
	900	215	**EM3702**	4,286	DPL	18.63	111	85.5	230/460	3.5	1, 30
3	3600	184	**EM3610**	1,923	DPL	14.64	50	86.5	230/460	3.6	1, 30
	1800	182	**EM3611**	2,001	DPL	15.69	70	89.5	230/460	4.2	1, 30
		213	**EM3703**	2,353	DPL	18.17	70	89.5	230/460	4.2	1, 30
	1200	215	**EM3704**	2,895	DPL	18.63	132	89.5	230/460	4.6	1, 30
5	3600	213	**EM3706**	3,272	DPL	18.17	74	88.5	230/460	5.9	1
	1800	215	**EM3707**	2,964	DPL	18.17	93	89.5	230/460	6.7	1, 30
	1200	254U	**EM2275**	6,033	DPL	20.82	226	90.2	230/460	7.3	1, 30
7 1/2	3600	215	**EM3709**	3,300	DPL	18.17	96	89.5	230/460	8.4	1, 30
	1800	254U	**EM2237**	5,138	DPL	23.03	254	91.7	230/460	9.4	1, 30
	1200	256U	**EM2276**	7,254	DPL	23.03	295	91	230/460	10.7	1, 30
10	1800	256U	**EM2238**	6,438	DPL	23.03	252	91.7	230/460	13	1, 30
15	1800	284U	**EM2333**	8,862	DPL	26.34	315	92.4	230/460	18.1	1, 30
20	1800	286U	**EM2334**	10,606	DPL	26.34	318	93	230/460	24	1, 30
Totally enclosed, C-Face, footless											
2	1800	184C	**VEM3609**	2,378	DPL	13.31	45	86.5	230/460	2.9	1, 30
	1200	184C	**VEM3614**	2,687	DPL	17.18	97	88.5	230/460	3.5	1, 30
3	1800	184C	**VEM3611**	2,458	DPL	15.68	70	89.5	230/460	4.2	1, 30
5	3600	184C	**VEM3613**	2,208	DPL	15.68	74	88.5	230/460	5.9	1
	1800	184C	**VEM3615**	2,806	DPL	17.18	93	89.5	230/460	6.7	1, 30

(a) See notes on inside back flap.

Cast iron frame

U-frame, single phase

1 thru 3 Hp

IP54

Features:

- Ball bearings
- Heavy-gauge steel and cast-iron frames
- Exxon Polyrex™ EM grease
- U-Frame mounting dimensions

Applications:

- Pumps
- Compressors
- Fans
- Conveyors
- Machine tools

Hp	RPM	NEMA Frame	Catalog Number	List Price	Disc. Sym.	"C" Dim.	Aprx. Wt. (lb)	Full Load Efficiency	Voltage	Full Load Amps	Notes (a)
Totally enclosed, foot mounted											
1	1200	184	**L3607**	3,106	DPL	15.69	74	67	115/230	7	1, 3
2	1800	184	**L3605**	2,371	DPL	15.69	67	75.5	115/230	11.5	1, 3, 30
	1200	215	**L3703**	5,128	DPL	17.51	113	80	115/230	9.4	2, 30, 65
3	1800	215	**L3705**	4,043	DPL	17.51	117	80	115/230	14	1, 30, 65
Totally enclosed, C-Face, footless											
2	1800	184C	**VL3605**	2,557	DPL	15.68	64	75.5	115/230	11.5	1, 3, 30

(a) See notes on inside back flap.

Automotive duty, three phase, TEFC, foot mounted

1 thru 60 Hp

IP55

Features:

- Heavy duty cast iron frames
- Double shielded ball bearings (regreaseable)
- Shaft slinger ODE and DE
- Epoxy paint
- 65°C ambient 1.00 SF
- 40°C ambient 1.15 SF

Applications:

- Pumps
- Compressors
- Fans
- Conveyors
- Machine tools

Hp	RPM	NEMA Frame	Catalog Number	List Price	Disc. Sym.	"C" Dim.	Aprx. Wt. (lb)	Full Load Efficiency	Voltage	Full Load Amps	Notes (a)
1	1800	182	**AEM3683-4**	2,360	DPL	13.18	89	85.5	460	1.6	60
1 1/2	1800	184	**AEM3686-4**	2,534	DPL	14.74	91	87.5	460	2.1	
2	1800	184	**AEM3689-4**	2,699	DPL	14.74	91	88.5	460	2.7	
3	1800	213	**AEM3783-4**	3,114	DPL	18.07	155	89.5	460	3.9	
5	1800	215	**AEM3787-4**	4,077	DPL	18.07	166	90.2	460	6.7	
7 1/2	1800	254U	**AEM2237-4**	5,470	DPL	23.11	270	91.7	460	9.1	
10	1800	256U	**AEM2238-4**	6,615	DPL	23.11	270	91.7	460	12.2	
15	1800	284U	**AEM2333-4**	9,190	DPL	26.33	268	92.4	460	17.6	
20	1800	286U	**AEM2334-4**	11,079	DPL	27.81	420	93	460	23	
25	1800	324U	**AEM4103-4**	14,122	DPL	30.56	437	93.6	460	30	
30	1800	326U	**AEM4104-4**	15,955	DPL	30.66	469	93.6	460	35	
40	1800	364U	**AEM4307-4**	18,958	DPL	33.94	874	94.5	460	45	
50	1800	365U	**AEM4311-4**	22,831	DPL	33.94	915	94.5	460	56	
60	1800	405U	**AEM4314-4**	27,896	DPL	38.08	1326	95	460	66.6	

(a) See notes on inside back flap.

Cast iron frame

Single and three phase, C-Face, TEFC

1/2 thru 7 1/2 Hp

IP54

Features:

- Low profile F-3 Conduit box, most designs
- Multiple base mounting configurations
- Color coded and numbered leads for ease of connectivity
- Inverter ready
- Laser etched nameplate with highly legible font
- Super-E® motors have NEMA Premium® efficiency
- 3 year warranty on Premium efficient motors

Applications:

- Conveyors
- Unit handling
- Baggage handling
- Packaging equipment
- Door operators
- Elevators
- Hoists

Hp	RPM	NEMA Frame	Catalog Number	List Price	Disc. Sym.	"C" Dim.	Aprx. Wt. (lb)	Full Load Efficiency	Voltage	Full Load Amps	Notes (a)
Single phase, foot mounted											
1/2	1800	56C	**CUHL3518**	807	UH1	12.22	37	68	115/208-230	3.5	
1	1800	56C	**CUHL3519**	983	UH1	13.22	44	67	115/208-230	6.4	
Single phase, footless											
1/2	1800	56C	**VUHL3518**	764	UH1	12.22	35	68	115/208-230	3.5	
1	1800	56C	**VUHL3519**	940	UH1	13.22	40	67	115/208-230	6.4	
Three phase, foot mounted											
1/2	1800	56C	**CUHM3538**	692	UH3	12.23	27	72	230/460	1.1	1, 48
3/4	1800	56C	**CUHM3542**	731	UH3	12.23	31	77	230/460	1.2	1, 48
1	1800	56C	**CEUHM3546**	1,107	UH3	12.23	38	85.5	230/460	1.5	1, 48
		143TCY	**CEUHM3546T**	1,121	UH3	13.29	39	85.5	230/460	1.5	1, 37, 48
1 1/2	1800	56C	**CEUHM3554**	1,169	UH3	13.23	41	86.5	230/460	2.2	1, 48
		145TCY	**CEUHM3554T**	1,184	UH3	13.29	45	86.5	230/460	2.2	1, 37, 48
2	1800	56C	**CEUHM3558**	1,291	UH3	13.23	45	86.5	230/460	2.9	1, 48
		145TCY	**CEUHM3558T**	1,304	UH3	13.29	50	86.5	230/460	2.9	1, 37, 48
3	1800	182TC	**CEUHM3611T**	1,525	UH3	16.55	73	89.5	230/460	4.2	1, 48
5	1800	184TC	**CEUHM3615T**	1,675	UH3	18.05	94	89.5	230/460	6.7	1, 48
Three phase, footless											
1/2	1800	56C	**VEUHM3538**	1,000	UH3	13.23	33	82.5	208-230/460	0.8	1, 48
		56C	**VUHM3538**	682	UH3	13.23	30	72	230/460	1.1	1, 48
3/4	1800	56C	**VEUHM3542**	1,062	UH3	13.23	35	84	208-230/460	1.1	1, 48
		56C	**VUHM3542**	723	UH3	13.23	35	77	230/460	1.2	1, 48
1	1800	56C	**VEUHM3546**	1,093	UH3	13.23	38	85.5	230/460	1.5	1, 48
		143TC	**VEUHM3546T**	1,113	UH3	13.29	38	85.5	230/460	1.5	1, 48
1 1/2	1800	56C	**VEUHM3554**	1,391	UH3	13.23	41	86.5	230/460	2.2	1, 48
		145TC	**VEUHM3554T**	1,163	UH3	13.29	43	86.5	230/460	2.2	1, 48
2	1800	56C	**VEUHM3558**	1,467	UH3	13.23	45	86.5	230/460	2.9	1, 48
		145TC	**VEUHM3558T**	1,291	UH3	13.29	48	86.5	230/460	2.9	1, 48
3	1800	182TC	**VEUHM3611T**	1,467	UH3	16.55	73	89.5	230/460	4.2	1, 48
5	1800	184TC	**VEUHM3615T**	1,614	UH3	18.05	88	89.5	230/460	6.7	1, 48
7 1/2	1800	213TC	**VEUHM3710T**	2,379	UH3	19.76	151	91.7	230/460	9.5	1, 48
Three phase, footless, 575 volts											
1/2	1800	56C	**VUHM3538-5**	682	UH3	13.23	33	82.5	575	0.6	1, 48
3/4	1800	56C	**VUHM3542-5**	723	UH3	13.23	34	75.5	575	0.9	1, 48
1	1800	56C	**VEUHM3546-5**	1,093	UH3	13.23	38	85.5	575	1.2	1, 48
		143TC	**VEUHM3546T-5**	1,113	UH3	13.29	38	85.5	575	1.2	1, 48
1 1/2	1800	145TC	**VEUHM3554T-5**	1,163	UH3	13.29	44	86.5	575	1.8	1, 48
2	1800	145TC	**VEUHM3558T-5**	1,291	UH3	13.29	48	86.5	575	2.3	1, 48

(a) See notes on inside back flap.

High cycle brake motor, three phase

1/2 thru 3 Hp

IP54

Features:

- Cast aluminum frame design engineered for increased thermal dissipation
- Low inertia, high efficient motor
- Fast action DC brake with integral rectifier

Applications:

- Frequent start and stop applications
- Conveyors
- Unit handling
- Baggage handling
- Packaging equipment
- Door operators
- Hoists

Hp	RPM	NEMA Frame	Enclosure	Catalog Number	List Price	Disc. Sym.	"C" Dim.	Aprx. Wt. (lb)	Full Load Efficiency	Voltage	Full Load Amps	Brake Rating (b)	Notes (a)
C-Face, footless													
1/2	1800	56C	TENV	**VRBM3538**	2,552	UH3	13.62	35	75.5	208-230/460	0.9	3	1
3/4	1800	56C	TENV	**VRBM3542**	2,989	UH3	14.50	47	75	208-230/460	1.3	6	
1	1800	56C	TENV	**VRBM3546**	3,443	UH3	15.50	47	74	230/460	1.6	6	
		143TC	TENV	**VRBM3546T**	3,682	UH3	15.57	46	74	230/460	1.6	6	
1 1/2	1800	145TC	TEFC	**VRBM3554T**	3,746	UH3	16.31	63	82.5	230/460	2.3	10	1
2	1800	145TC	TEFC	**VRBM3558T**	3,850	UH3	17.68	69	84	230/460	2.9	10	1
3	1800	145TC	TEFC	**VRBM3561T**	3,964	UH3	17.68	76	85.5	230/460	4.4	15	

(a) See notes on inside back flap.
(b) Brake torque rating in lb-ft.

D-series brake motor, three phase, totally enclosed

1/2 thru 10 Hp

IP54

Features:

- Low profile F-3 Conduit box, most designs
- Fast action DC brake with integral rectifier
- Manual release lever
- Suitable for mounting in any configuration
- Inverter ready
- Super-E® motors have NEMA Premium® efficiency

Applications:

- Conveyors
- Unit handling
- Baggage handling
- Packaging equipment
- Door operators
- Elevators
- Hoists

Hp	RPM	NEMA Frame	Enclosure	Catalog Number	List Price	Disc. Sym.	"C" Dim.	Aprx. Wt. (lb)	Full Load Efficiency	Voltage	Full Load Amps	Brake Rating (b)	Notes (a)
Foot mounted													
1/2	1800	56	TENV	**BNM3538-D**	1,571	UH3	14.96	43	80	208-230/460	0.8	3	1, 48
3/4	1800	56	TENV	**BNM3542-D**	2,136	UH3	14.96	47	78.5	208-230/460	1.4	6	1, 48
1	1800	56	TENV	**EBNM3546-D**	2,398	UH3	15.96	51	85.5	230/460	1.5	6	1, 10, 48
		145TY	TENV	**EBNM3546T-D**	2,398	UH3	16.02	51	85.5	230/460	1.5	6	1, 10, 48
1 1/2	1800	145TY	TENV	**EBNM3554T-D**	2,590	UH3	16.90	62	86.5	230/460	2.1	10	10, 48
2	1800	145TY	TEFC	**EBM3558T-D**	2,766	UH3	17.35	61	86.5	230/460	2.9	10	1, 48
3	1800	182T	TEFC	**EBM3611T-D**	3,583	UH3	21.64	104	89.5	230/460	4.1	15	1, 48
5	1800	184T	TEFC	**EBM3615T-D**	4,332	UH3	23.14	117	89.5	230/460	6.7	15	1, 48
7 1/2	1800	213T	TEFC	**EBM3710T-D**	5,826	UH3	25.42	170	91.7	230/460	9.5	25	1, 48
10	1800	215T	TEFC	**EBM3714T-D**	7,170	UH3	26.92	165	91.7	230/460	12	35	1, 48
C-Face, foot mounted													
2	1800	145TCY	TEFC	**CEBM3558T-D**	2,923	UH3	17.35	61	86.5	230/460	2.9	10	1, 48
3	1800	182TC	TEFC	**CEBM3611T-D**	3,705	UH3	21.64	103	89.5	230/460	4.1	15	1, 48
5	1800	184TC	TEFC	**CEBM3615T-D**	4,295	UH3	23.14	121	89.5	230/460	6.7	25	1, 48
7 1/2	1800	213TC	TEFC	**CEBM3710T-D**	6,056	UH3	26.17	141	91.7	230/460	9.5	25	1, 48
10	1800	215TC	TEFC	**CEBM3714T-D**	7,402	UH3	27.67	165	91.7	230/460	12	35	1, 48
C-Face, footless													
1/2	1800	56C	TEFC	**VBM3538-D**	2,045	UH3	16.29	46	72	208-230/460	1.1	3	1, 48
		56C	TENV	**VBNM3538-D**	2,091	UH3	15.96	44	80	208-230/460-480	0.8	3	1, 48
3/4	1800	56C	TEFC	**VBM3542-D**	2,123	UH3	16.29	52	78.5	208-230/460	1.4	6	1, 48
		56C	TEFC	**VEBM3542-D**	2,330	UH3	16.29	50	84	208-230/460	1.1	6	1, 48
		56C	TENV	**VBNM3542-D**	2,172	UH3	15.96	48	78.5	208-230/460	1.4	6	1, 48
1	1800	56C	TENV	**VEBNM3546-D**	2,445	UH3	15.96	51	85.5	230/460	1.5	6	48
		56C	TEFC	**VEBM3546-D**	2,424	UH3	16.29	54	85.5	230/460	1.5	6	1, 48
		143TC	TEFC	**VEBM3546T-D**	2,603	UH3	16.35	51	85.5	230/460	1.5	6	1, 48
1 1/2	1800	56C	TEFC	**VEBM3554-D**	2,524	UH3	17.29	58	86.5	230/460	2.2	10	1, 48
		145TC	TENV	**VEBNM3554T-D**	2,654	UH3	16.90	62	86.5	230/460	2.1	10	48
		145TC	TEFC	**VEBM3554T-D**	2,709	UH3	17.35	58	86.5	230/460	2.2	10	1, 48
2	1800	56C	TEFC	**VEBM3558-D**	2,752	UH3	17.29	57	86.5	230/460	2.9	10	1, 48
		145TC	TEFC	**VEBM3558T-D**	2,766	UH3	17.35	62	86.5	230/460	2.9	10	1, 48
3	1800	182TC	TEFC	**VEBM3611T-D**	3,652	UH3	21.64	101	89.5	230/460	4.2	15	1, 48
5	1800	184TC	TEFC	**VEBM3615T-D**	4,403	UH3	23.14	117	89.5	230/460	6.7	15	1, 48
7 1/2	1800	213TC	TEFC	**VEBM3710T-D**	5,996	UH3	26.17	151	91.7	230/460	9.5	25	1, 48
10	1800	215TC	TEFC	**VEBM3714T-D**	6,952	UH3	27.67	177	92	230/460	12	35	1, 48
C-Face, footless, 575 volts													
1	1800	143TC	TEFC	**VEBM3546T-5D**	2,603	UH3	16.35	52	85.5	575	1.2	6	1, 48
1 1/2	1800	145TC	TEFC	**VEBM3554T-5D**	2,709	UH3	17.35	55	86.5	575	1.8	10	1, 48
2	1800	145TC	TEFC	**VEBM3558T-5D**	2,766	UH3	17.35	62	86.5	575	2.3	10	1, 48
3	1800	182TC	TEFC	**VEBM3611T-5D**	3,652	UH3	21.64	101	89.5	575	3.1	15	1, 48
5	1800	184TC	TEFC	**VEBM3615T-5D**	4,403	UH3	23.14	117	89.5	575	5.2	15	1, 48

(a) See notes on inside back flap. (b) Brake torque rating in lb-ft.

Short series brake motor, three phase, TEFC

1/2 thru 5 Hp

IP54

Features:

- Low profile F-3 Conduit box, most designs
- Compact design
- Fast action DC brake with integral rectifier
- Suitable for mounting in any configuration
- Inverter ready
- Super-E® motors have NEMA Premium® efficiency

Applications:

- Conveyors
- Unit handling
- Baggage handling
- Packaging equipment
- Door operators
- Elevators
- Hoists

Hp	RPM	NEMA Frame	Catalog Number	List Price	Disc. Sym.	"C" Dim.	Aprx. Wt. (lb)	Full Load Efficiency	Voltage	Full Load Amps	Brake Rating (b)	Notes (a)
Foot mounted												
1	1800	56	**EBM3546-S**	2,197	UH3	14.37	51	85.5	230/460	1.5	6	1, 10, 48
		143TY	**EBM3546T-S**	2,213	UH3	15.43	51	85.5	230/460	1.5	6	1, 10, 48
1 1/2	1800	145TY	**EBM3554T-S**	2,401	UH3	15.43	54	86.5	230/460	2.2	10	1, 10, 48
2	1800	145TY	**EBM3558T-S**	2,480	UH3	15.43	58	86.6	230/460	2.9	10	1, 48
3	1800	182T	**EBM3611T-S**	2,924	UH3	19.05	83	89.5	230/460	4.2	15	1, 48
5	1800	184T	**EBM3615T-S**	3,422	UH3	20.55	106	89.5	230/460	6.7	25	1, 48
C-Face, footless												
1/2	1800	56C	**VBM3538-S**	1,941	UH3	14.37	41	72	208-230/460	1.1	3	1, 48
3/4	1800	56C	**VBM3542-S**	2,019	UH3	14.37	47	78.5	208-230/460	1.4	3	1, 48
1	1800	56C	**VEBM3546-S**	2,259	UH3	14.37	51	85.5	230/460	1.5	6	1, 48
		143TC	**VEBM3546T-S**	2,277	UH3	14.43	51	85.5	230/460	1.5	6	1, 48
1 1/2	1800	56C	**VEBM3554-S**	2,449	UH3	15.37	54	86.5	230/460	2.2	10	1, 48
		145TC	**VEBM3554T-S**	2,465	UH3	15.43	54	86.5	230/460	2.2	10	1, 10, 48
2	1800	56C	**VEBM3558-S**	2,528	UH3	15.37	58	86.5	230/460	2.9	10	1, 48
		145TC	**VEBM3558T-S**	2,544	UH3	15.43	58	86.5	230/460	2.9	10	1, 48
3	1800	182TC	**VEBM3611T-S**	3,046	UH3	19.05	83	89.5	230/460	4.2	15	1, 48
5	1800	184TC	**VEBM3615T-S**	3,544	UH3	20.55	106	89.5	230/460	6.7	25	1, 48
C-Face, footless, 575 volts												
1/2	1800	56C	**VBM3538-5S**	1,941	UH3	14.37	42	72	575	0.8	3	1, 48
1	1800	56C	**VEBM3546-5S**	2,259	UH3	14.37	51	85.5	575	1.2	6	1, 48
1 1/2	1800	145TC	**VEBM3554T-5S**	2,465	UH3	15.43	54	86.5	575	1.8	10	1, 10, 48

(a) See notes on inside back flap.
(b) Brake torque rating in lb-ft.

Single and three phase, TEFC

1/4 thru 30 Hp

IP44*

Features:

- Manual release
- Spring-set brake
- Vibration damping base
- Super-E® motors have NEMA Premium® efficiency
- Three phase motors suitable for inverter use per NEMA MG1 Part 31.4.4.2 unless note 38 is indicated

Applications:

- Conveyors
- Unit handling
- Machine tools
- Door operators
- Speed reducers
- Packaging equipment
- General purpose applications

Hp	RPM	NEMA Frame	Catalog Number	List Price	Disc. Sym.	"C" Dim.	Aprx. Wt. (lb)	Full Load Efficiency	Voltage	Full Load Amps	Brake Rating (b)	Notes (a)
Single phase, foot mounted												
1/4	1800	56	**BL3516**	1,548	BE1	14.36	27	59.5	115/230	2.1	3	2, 30, 41, 60
1/3	1800	56	**BL3517**	1,632	BE1	15.46	27	60	115/230	3	3	30, 41
1/2	1800	56	**BL3518**	1,770	BE1	16.08	32	68	115/230	3.7	3	30, 41
Single phase, footless												
1/3	1800	56C	**KBL3406**	1,714	BE1	15.45	27	60	115/230	3	3	30, 41
1/2	1800	56C	**KBL3409**	1,880	BE1	16.07	32	68	115/230	3.7	3	30, 41
3/4	1800	56C	**VBL3507**	2,442	BE1	16.82	40	72	115/230	4.2	6	30, 41
1	1800	56C	**VBL3510**	2,587	BE1	17.80	49	76.5	115/230	4.5	6	30, 41
		143TC	**VBL3510T**	2,587	BE1	17.86	49	76.5	115/230	4.5	6	30, 41
Foot mounted												
1/3	1800	56	**BM3569**	1,505	BE3	14.36	27	70	208-230/460	0.7	3	2, 38, 41, 60
1/2	1800	56	**BM3538**	1,635	BE3	14.98	31	75.5	208-230/460	0.9	3	2, 38, 41, 60
	1200	56	**BM3539**	2,253	BE3	16.45	35	72	230/460	1.2	6	30, 38, 41
3/4	1800	56	**BM3542**	1,913	BE3	16.45	31	75.5	208-230/460	1.5	6	38, 41
	1200	56	**BM3543**	2,365	BE3	17.45	39	77	208-230/460	1.5	6	38, 41
1	1800	56	**EBM3546**	2,594	BE3	16.80	44	85.5	230/460	1.5	6	30, 41
		143T	**EBM3546T**	2,646	BE3	17.86	46	85.5	230/460	1.5	6	30, 41
1 1/2	1800	145T	**EBM3554T**	2,979	BE3	17.86	52	86.5	230/460	2.2	10	30, 41
2	1800	145T	**EBM3558T**	3,127	BE3	17.86	57	86.5	230/460	2.9	10	30, 41
3	1800	182T	**EBM3611T**	3,944	BE3	21.12	89	89.5	230/460	4.2	15	30, 41
5	1800	184T	**EBM3615T**	4,782	BE3	22.65	106	89.5	230/460	6.7	25	30, 42
7 1/2	1800	213T	**EBM3710T**	6,307	BE3	27.20	158	91.7	230/460	9.4	35	30, 40
10	1800	215T	**EBM3714T**	7,927	BE3	29.19	165	91.7	230/460	12	50	30, 40
15	1800	254T	**EBM2333T**	11,214	BE3	33.07	337	92.4	230/460	18.1	75	30
20	1800	256T	**EBM2334T**	14,550	BE3	33.57	398	93	230/460	24	105	30
25	1800	284T	**EBM4103T**	18,380	BE3	39.66	516	93.6	230/460	30	105	30
30	1800	284T	**EBM4104T**	20,727	BE3	42.84	667	93.6	230/460	37	125	30
C-Face, foot mounted												
1	1800	143TC	**CEBM3546T**	2,587	BE3	17.86	43	85.5	230/460	1.7	6	41
1 1/2	1800	145TC	**CEBM3554T**	2,786	BE3	17.86	48	86.5	230/460	2.2	10	41
2	1800	145TC	**CEBM3558T**	2,865	BE3	17.86	52	86.5	230/460	2.9	10	41
3	1800	182TC	**CEBM3611T**	3,203	BE3	21.11	77	89.5	230/460	4.2	15	1, 41
5	1800	184TC	**CEBM3615T**	3,753	BE3	23.06	101	89.5	230/460	6.7	25	1, 42
7 1/2	1800	213TC	**CEBM3710T**	6,881	BE3	27.95	149	91.7	230/460	9.4	35	1, 40
10	1800	215TC	**CEBM3714T**	7,504	BE3	29.95	183	91.7	230/460	12	50	1, 42

(a) See notes on inside back flap.
(b) Brake torque rating in lb-ft.
Cast iron frame
*IP54 when Drain Fitting Kit #HA5027A03 is installed in the weep holes (48 thru 256T frame motors only)

Single and three phase, TEFC

Hp	RPM	NEMA Frame	Catalog Number	List Price	Disc. Sym.	"C" Dim.	Aprx. Wt. (lb)	Full Load Efficiency	Voltage	Full Load Amps	Brake Rating (b)	Notes (a)
Footless												
1/4	1800	56C	**KBM3454**	1,413	BE3	14.36	26	68	208-230/460	0.5	3	2, 38, 41, 60
1/3	1800	56C	**KBM3458**	1,502	BE3	14.36	23	70	208-230/460	0.7	3	2, 38, 41, 60
1/2	1800	56C	**VEBNM3538**	2,361	BE3	15.26	37	84	230/460	0.9	3	41, 60
		56C	**VBM3538**	1,673	BE3	14.98	30	75.5	208-230/460	0.9	3	2, 38, 41, 60
3/4	1800	56C	**VEBNM3542**	2,654	BE3	15.26	53	84	208-230/460	1.1	6	41, 60
		56C	**VBM3542**	1,960	BE3	15.86	35	75	208-230/460	1.3	6	2, 38, 41, 60
1	1800	56C	**VEBM3546**	2,256	BE3	16.80	45	85.5	230/460	1.5	6	1, 30, 41
		143TC	**VEBM3546T**	2,587	BE3	16.86	45	85.5	230/460	1.5	6	1, 30, 41
1 1/2	1800	56C	**VEBM3554**	2,709	BE3	17.80	53	86.5	230/460	2.2	6	1, 30, 41
		145TC	**VEBM3554T**	2,786	BE3	17.86	52	86.5	230/460	2.2	10	1, 30, 41
2	1800	56C	**VEBM3558**	2,789	BE3	17.80	56	86.5	230/460	2.9	6	1, 30, 41
		145TC	**VEBM3558T**	2,865	BE3	17.86	57	86.5	230/460	2.9	10	1, 30, 41
3	1800	182TC	**VEBM3611T**	3,203	BE3	21.11	82	89.5	230/460	4.2	15	1, 30, 41
5	1800	184TC	**VEBM3615T**	3,753	BE3	23.06	99	89.5	230/460	6.7	25	1, 30, 42
7 1/2	1800	213TC	**VEBM3710T**	6,881	BE3	27.89	172	91.7	230/460	9.4	35	1, 30, 40
10	1800	215TC	**VEBM3714T**	7,504	BE3	29.89	165	91.7	230/460	12	50	1, 30, 42
575 volts												
3/4	1800	56C	**VBM3542-5**	1,960	BE3	15.26	40	80	575	1.9	6	2, 41, 60
1	1800	143TC	**VEBM3546T-5**	2,587	BE3	16.86	44	85.5	575	1.2	6	1, 41
1 1/2	1800	143TC	**VEBM3554T-5**	2,786	BE3	17.87	52	86.5	575	1.8	10	1, 42
2	1800	145TC	**VEBM3558T-5**	2,865	BE3	17.87	57	86.5	575	2.3	10	1, 42
3	1800	182TC	**VEBM3611T-5**	3,203	BE3	21.11	82	89.5	575	3.1	15	1, 42

(a) See notes on inside back flap.
(b) Brake torque rating in lb-ft. Brakes cannot be operated on variable frequency drives.
Cast iron frame
Red catalog number indicates **NEW** product.
*IP54 when Drain Fitting Kit #HA5027A03 is installed in the weep holes (48 thru 256T frame motors only)

Single and three phase, TEFC, C-Face, fan on drive end

3/4 thru 30 Hp

IP44*

Features:

- Manual release
- Spring-set brake
- Fan on DE
- Easily accessible brake leads
- Vibration damping base
- Super-E® motors have NEMA Premium® efficiency
- Three phase motors suitable for inverter use per NEMA MG1 Part 31.4.4.2

Applications:

- Conveyors
- Unit handling
- Machine tools
- Door operators
- Speed reducers
- Packaging equipment
- General purpose applications

Hp	RPM	NEMA Frame	Catalog Number	List Price	Disc. Sym.	"C" Dim.	Aprx. Wt. (lb)	Full Load Efficiency	Voltage	Full Load Amps	Brake Rating (b)	Notes (a)
Single phase												
3/4	1800	56Y	**BL3507**	2,396	BE1	16.71	42	72	115/230	4.2	6	30, 41
1	1800	56Y	**BL3510**	2,536	BE1	17.11	52	68	115/230	6.4	6	30, 41
Three phase												
1	1800	182Y	**EBM3603Y**	2,854	BE3	17.49	44	85.5	230/460	1.5	6	30, 41
	1200	145TY	**EBM3556TY**	2,765	BE3	17.49	48	82.5	230/460	1.8	10	30, 41
1 1/2	1800	56Y	**EBM3554Y**	2,722	BE3	17.11	48	86.5	230/460	2.2	10	30, 41
		145TY	**EBM3554TY**	2,722	BE3	17.49	48	86.5	230/460	2.2	10	30, 41
		184Y	**EBM3606Y**	3,035	BE3	17.49	48	86.5	230/460	2.2	10	30, 41
2	1800	56Y	**EBM3558Y**	2,801	BE3	17.11	52	86.5	230/460	2.9	10	30, 41
		145TY	**EBM3558TY**	2,801	BE3	17.49	52	86.5	230/460	2.9	10	30, 41
		184Y	**EBM3609Y**	3,122	BE3	17.49	52	86.5	230/460	2.9	10	30, 41
	1200	184TY	**EBM3614TY**	3,330	BE3	22.12	104	88.5	230/460	3.5	15	30, 41
3	1800	182TY	**EBM3611TY**	3,081	BE3	20.62	77	89.5	230/460	4.2	15	1, 30, 41
		213Y	**EBM3703Y**	4,851	BE3	22.42	77	89.5	230/460	4.2	15	1, 30, 41
	1200	213TY	**EBM3704TY**	6,685	BE3	27.01	154	89.5	230/460	4.6	35	1, 30, 40
5	1800	184TY	**EBM3615TY**	3,631	BE3	22.12	101	89.5	230/460	6.7	25	1, 30, 40
		184TY	**EBM3635TY**	3,130	BE3	22.12	100	89.5	230/460	6.7	15	1, 30, 41
		215Y	**EBM3707Y**	5,828	BE3	22.87	100	89.5	230/460	6.9	25	1, 30, 40
7 1/2	1800	213TY	**EBM3710TY**	6,646	BE3	27.01	149	91.7	230/460	9.4	35	1, 30, 40
		213TY	**EBM3730TY**	5,502	BE3	27.01	146	91.7	230/460	9.4	25	1, 30, 40
10	1800	215TY	**EBM3714TY**	7,268	BE3	29.01	183	91.7	230/460	12	50	1, 30, 42
		215TY	**EBM3734TY**	6,936	BE3	28.51	187	91.7	230/460	12	35	1, 30, 40
15	1800	254TY	**EBM2353TY**	10,227	BE3	32.71	286	92.4	230/460	18.1	50	1, 30
20	1800	256TY	**EBM2334TY**	14,550	BE3	23.28	263	93	230/460	24	105	1, 30
		256TY	**EBM2354TY**	13,019	BE3	32.71	328	93	230/460	24	75	1, 30
25	1800	284TY	**EBM4103TY**	18,380	BE3	35.83	448	93.6	230/460	30	105	1, 30
30	1800	286TY	**EBM4104TY**	20,575	BE3	39.13	565	93.6	230/460	38	125	1, 30

(a) See notes on inside back flap.
(b) Brake torque rating in lb-ft. Brakes cannot be operated on variable frequency drives.
Cast iron frame
*IP54 when Drain Fitting Kit #HA5027A03 is installed in the weep holes (48 thru 256T frame motors only)

Single and three phase, TEFC and open, Dings brake

3 thru 10 Hp

TEFC IP43 | Open IP22

Features:

- Manual release
- Spring-set brake
- Fan on DE
- Easily accessible brake leads
- Vibration damping base
- Super-E® motors have NEMA Premium® efficiency
- Three phase motors suitable for inverter use per NEMA MG1 Part 31.4.4.2

Applications:

- Conveyors
- Unit handling
- Machine tools
- Door operators
- Speed reducers
- Packaging equipment
- General purpose applications

Hp	RPM	NEMA Frame	Catalog Number	List Price	Disc. Sym.	"C" Dim.	Aprx. Wt. (lb)	Full Load Efficiency	Voltage	Full Load Amps	Brake Rating (b)	Notes (a)
Single phase												
3	1200	213TY	**EBM3704TY-DI**	7,188	BE3	27.20	140	89.5	230/460	4.6	35	1, 30, 40
5	1800	184T	**EBM3615T-DI**	5,141	BE3	23.21	125	89.5	230/460	6.7	25	30, 42
		184TY	**EBM3615TY-DI**	3,904	BE3	22.84	125	89.5	230/460	6.7	25	1, 30, 40
		215Y	**EBM3707Y-DI**	6,266	BE3	22.84	127	89.5	230/460	6.9	25	1, 30, 40
7 1/2	1800	213TY	**EBM3710TY-DI**	7,145	BE3	27.20	157	91.7	230/460	9.4	35	1, 30, 40
		213TY	**EBM3730TY-DI**	5,915	BE3	27.20	157	91.7	230/460	9.4	25	1, 30, 40
10	1800	215TY	**EBM3734TY-DI**	7,456	BE3	27.20	195	91.7	230/460	12	35	1, 30, 40
		215TY	**EBM3714TY-DI**	7,815	BE3	28.70	195	91.7	230/460	12	50	1, 30, 42
Totally enclosed fan cooled, C-Face, foot mounted												
5	1800	184TC	**CEBM3615T-DI**	3,753	BE3	23.20	123	89.5	230/460	6.7	25	1, 42
Totally enclosed fan cooled, C-Face, footless												
5	1800	184TC	**VEBM3615T-DI**	3,753	BE3	23.22	125	89.5	230/460	6.7	25	1, 30, 42
Open, foot mounted												
5	1800	184T	**EBM3218T-DI**	4,367	BO3	21.84	122	89.5	230/460	6.4	25	30, 42
Open, C-Face, footless												
5	1800	184TC	**VEBM3218T-DI**	3,787	BO3	21.84	122	89.5	230/460	6.6	25	30, 42

(a) See notes on inside back flap.
(b) Brake torque rating in lb-ft. Brakes cannot be operated on variable frequency drives.

Three phase, ODP
1/2 thru 15 Hp

IP22

Features:

- Manual release
- Spring-set brake
- Vibration damping base
- Dynamically balanced rotor
- Super-E® motors have NEMA Premium® Efficiency
- Suitable for inverter use per NEMA MG1 Part 31.4.4.2 unless note 38 is indicated

Applications:

- Conveyors
- Unit handling
- Machine tools
- Door operators
- Speed reducers
- Packaging equipment
- General purpose applications

Hp	RPM	NEMA Frame	Catalog Number	List Price	Disc. Sym.	"C" Dim.	Aprx. Wt. (lb)	Full Load Efficiency	Voltage	Full Load Amps	Brake Rating (b)	Notes (a)
Foot mounted												
1/2	1800	56	**BM3108**	1,495	BO3	14.14	27	74	230/460	1	3	30, 38, 41
3/4	1800	56	**BM3112**	1,741	BO3	14.77	31	75.5	208-230/460	1.5	6	38, 41
1	1800	56	**BM3116**	1,951	BO3	15.64	33	78.5	208-230/460	1.7	3	38, 41
		143T	**EBM3116T**	2,274	BO3	16.37	49	87.5	208-230/460	1.5	6	41
1 1/2	1800	145T	**EBM3154T**	2,524	BO3	16.37	48	86.5	230/460	2.2	10	30, 41
2	1800	145T	**EBM3157T**	2,880	BO3	16.37	51	86.5	230/460	2.9	10	30, 41
3	1800	182T	**EBM3211T**	3,534	BO3	19.57	83	89.5	230/460	4.2	15	30, 41
5	1800	184T	**EBM3218T**	4,367	BO3	21.52	104	89.5	230/460	6.4	25	30, 42
		184T	**EBM3248T**	3,753	BO3	21.06	104	89.5	230/460	6.4	15	30, 41
7 1/2	1800	213T	**EBM3311T**	5,488	BO3	24.45	149	91	230/460	9.7	35	30, 40
10	1800	215T	**EBM3313T**	6,883	BO3	26.08	159	91.7	230/460	12.5	50	30, 42
15	1800	254T	**EBM2513T**	9,118	BO3	29.88	252	93	230/460	17.7	75	30, 42
C-Face, footless												
1/2	1800	56C	**VBM3108**	1,576	BO3	14.36	28	74	230/460	1	3	30, 38, 41
3/4	1800	56C	**VBM3112**	1,831	BO3	15.36	31	75.5	208-230/460	1.5	6	38, 41
1	1800	56C	**VBM3116**	1,994	BO3	15.36	33	78.5	208-230/460	1.7	6	38, 41
		143TC	**VEBM3116T**	2,541	BO3	15.32	44	85.5	230/460	1.5	6	30, 41
1 1/2	1800	56C	**VBM3154**	2,317	BO3	15.26	44	80	208-230/460	2.5	10	41
		145TC	**VEBM3154T**	2,654	BO3	15.37	44	86.5	230/460	2.2	10	30, 41
2	1800	145TC	**VEBM3157T**	2,745	BO3	16.37	50	86.5	230/460	2.9	10	30, 41
3	1800	182TC	**VEBM3211T**	3,148	BO3	19.57	81	89.5	230/460	4.2	15	30, 41
5	1800	184TC	**VEBM3218T**	3,787	BO3	21.52	100	89.5	230/460	6.6	25	30, 42
		184TC	**VBM3218T**	4,431	BO3	20.02	84	87.5	208-230/460	7.2	25	16, 42
		184TC	**VEBM3248T**	3,288	BO3	21.07	99	89.5	230/460	6.6	15	30, 41

(a) See notes on inside back flap.
(b) Brake torque rating in lb-ft. Brakes cannot be operated on variable frequency drives.

Washdown, three phase, totally enclosed, C-Face, foot mounted
1/2 thru 5 Hp

IP55

Features:
- 300 series stainless steel hardware
- Neoprene gaskets
- Double sealed ball bearings
- Power off manual release brake with automatic reset
- Lip and V-Ring seal on DE
- NEMA Premium® efficiency
- White epoxy, corrosion resistant finish
- Stainless steel shaft extension
- Standard NEMA BA dimension

Applications:
- Food processing
- Wet environment
- Conveyors
- Packaging
- Pumps and wastewater

Hp	RPM	NEMA Frame	Enclosure	Catalog Number	List Price	Disc. Sym.	"C" Dim.	Aprx. Wt. (lb)	Full Load Efficiency	Voltage	Full Load Amps	Brake Rating (b)	Notes (a)
1/2	1800	56C	TENV	**CEWDBM3538**	3,435	WDW	15.31	42	84	208-230/460	0.9	3	1, 12, 41
3/4	1800	56C	TENV	**CEWDBM3542**	3,712	WDW	15.31	42	84	230/460	1.1	6	1, 12, 30, 41
1	1800	56C	TENV	**CEWDBM3546**	3,810	WDW	16.31	50	85.5	230/460	1.5	6	1, 30, 41
		143TC	TENV	**CEWDBM3546T**	3,736	WDW	16.81	51	85.5	230/460	1.5	6	1, 30, 41
1 1/2	1800	145TC	TENV	**CEWDBM3554T**	4,146	WDW	18.14	61	86.5	230/460	2.1	10	30, 41
2	1800	145TC	TEFC	**CEWDBM3558T**	4,219	WDW	18.56	60	86.5	230/460	2.9	10	1, 30, 41
3	1800	182TC	TEFC	**CEWDBM3611T**	5,105	WDW	21.80	93	89.5	230/460	4.2	15	1, 30, 41
5	1800	184TC	TEFC	**CEWDBM3615T**	6,167	WDW	23.30	110	89.5	230/460	6.7	25	1, 30, 42

(a) See notes on inside back flap.
(b) Brake torque rating in lb-ft.

Double C-Face motor brake kits
Coil voltage: 115/208-230

Features:
- Double C-Face coupler brakes
- Mounts on motors with C-Face
- Provides NEMA C-Face mounting on brake
- Spring set, electrically released

Brake Rating	Brake Mounting	Catalog Number	List Price	Disc. Sym.	Ap'x. Shpg. Wgt.
3 ft-lb	56C	**CBK003-1**	813	SVC	12
6 ft-lb	56C	**CBK006-1**	1,197	SVC	12
6 ft-lb	145TC	**CBK006-2**	1,197	SVC	12
10 ft-lb	145TC	**CBK010-1**	1,397	SVC	12
15 ft-lb	145TC	**CBK015-1**	2,096	SVC	12

IEC Low Voltage Motors (< 1,000 VAC)

Wide product portfolio for any industry, any application

True IEC design and dimensions

- TEFC – M3AA/M3BP, frame 63 - 500 – cast aluminum up to 280, cast iron up to 500
  - Power range – 0.09 to 1,500 kW (0.16 to 2,000 Hp)
- Water Jacketed – M3LP, frame 280 - 500 – cast iron/fabricated steel
  - Power range – 90 to 2,000 kW (120 to 2,600 Hp)
- Square-laminate frame – HDP blower cooled, water cooled, or TEFC, frame 80 - 400
  - Power range – 2 to 2,000 kW (3 to 2,600 Hp)
- SynRM technology – M3AL/M3BL, frame 132 - 315 – cast aluminum or cast iron – IE5 efficiency on VFD
  - Power range – 5.5 to 350 kW (7 to 470 Hp)
- Permanent Magnet – M3BJ/M3LJ air-cooled or water-cooled, frame 280 - 560
  - Power range – up to 2,500 kW (3,300 Hp)

NEMA dimensions

- TEFC – M3BN, frame 449, 5000, and 586/7/8 – cast iron
  - 250 to 900 Hp

Safe area motors

- Induction motors in aluminum and cast iron with efficiencies up to IE4
- Synchronous reluctance motors
- Permanent magnet motors
- High speed motors
- Water cooled motors

Hazardous area motors

- Flameproof motors
- Flameproof mining motors
- Increased safety motors
- Non-sparking motors
- Dust ignition proof motors

Industry and special applications

- Marine, mining, food & beverage, water, HVAC
- Food safe stainless motors
- Brake motors
- High ambient motors
- Square-laminate frame variable speed motors
- Roller table motors
- Smoke extraction motors
- E-mobility motors
- Smart sensor enabled motors

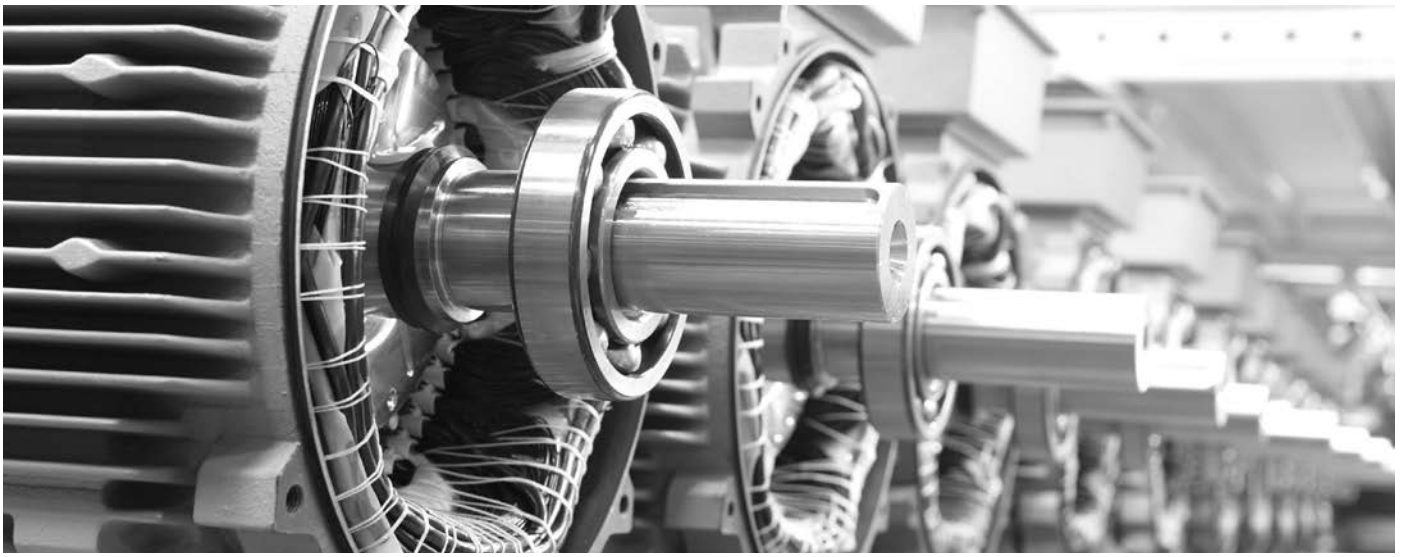

We have more to offer than just the IEC motors shown in this stock catalog. Contact your local sales office to discuss the full line of ABB custom IEC motors.

Process Performance IEC aluminum, three phase, 50/60 Hz, 400/460VY

0.12-55 kW (0.16-75 Hp)

IP55

Features:

- Durable cast aluminum construction (extruded aluminum in frame sizes 200 and above)
- Cast iron end shield standard on frame sizes 160 and up
- IE3 efficiency per IEC 60034-30-1 (2014) (80 frame and above) All motors are compliant with DOE and NRCan.
- Complies with EU MEPS/ EcoDesign Regulation (EU) 2019/1781 effective July 2021. CE marked.
- 6 post terminal block in large, F3 terminal box provides easier, lower cost installation
- Class F insulation with Class B temperature limits
- Inverter ready 2:1CT and 20:1VT
- Painting system C3M acc. to ISO 12944-5
- (3) PTC thermistors, 150 °C standard on sizes 100-250
- IC411 enclosure (TEFC)

Applications:

- Pumps
- Compressors
- Fans
- Conveyors
- General machinery

kW // Hp*	RPM	IEC Frame	Catalog Number	ABB Product Code**	ABB Type Number	List Price	Disc. Sym.	"L" Dim. (in)	Aprx. Wt. (lb)	Voltage	Notes (a)
IM B3 (1001), foot mounted											
0.18 // 0.24	1500/1800	63	**MM06184-S-AP**	3GAA062312-ASF	M3AA 63B 4	364	IPP	8.43	10	230D/400Y,50Hz; 460Y,60Hz	
0.25 // 0.33	1500/1800	71	**MM07254-S-AP**	3GAA072311-ASE	M3AA 71A 4	374	IPP	9.45	11	230D/400Y,50Hz; 460Y,60Hz	
0.37 // 0.5	3000/3600	71	**MM07372-S-AP**	3GAA071311-ASE	M3AA 71A 2	390	IPP	9.45	11	230D/400Y,50Hz; 460Y,60Hz	
	1500/1800	71	**MM07374-S-AP**	3GAA072312-ASE	M3AA 71B 4	421	IPP	9.45	11	230D/400Y,50Hz; 460Y,60Hz	
0.55 // 0.73	3000/3600	71	**MM07552-S-AP**	3GAA071312-ASE	M3AA 71B 2	431	IPP	9.45	13	230D/400Y,50Hz; 460Y,60Hz	
	1500/1800	80	**MM08554-S-AP**	3GAA082311-ASE	M3AA 80A 4	466	IPP	10.45	19	230D/400Y,50Hz; 460Y,60Hz	
0.75 // 1	3000/3600	80	**EMM08752-S-AP**	3GAA081320-ASK	M3AA 80MB 2	663	IPP	10.45	21	230D/400Y,50Hz; 460Y,60Hz	
	1500/1800	80	**EMM08754-S-AP**	3GAA082350-ASK	M3AA 80ME 4	690	IPP	11.56	30	230D/400Y,50Hz; 460Y,60Hz	
	1000/1200	90	**EMM09756-S-AP**	3GAA093540-ASK	M3AA 90LD 6	869	IPP	13.05	42	230D/400Y,50Hz; 460Y,60Hz	
1.1 // 1.5	3000/3600	80	**EMM08112-S-AP**	3GAA081330-ASK	M3AA 80MC 2	721	IPP	10.45	23	230D/400Y,50Hz; 460Y,60Hz	
	1500/1800	90	**EMM09114-S-AP**	3GAA092530-ASK	M3AA 90LC 4	786	IPP	13.05	42	230D/400Y,50Hz; 460Y,60Hz	
	1000/1200	100	**EMM10116-S-AP**	3GAA103550-ASK	M3AA 100LE 6	1,066	IPP	13.05	77	230D/400Y,50Hz; 460Y,60Hz	
1.5 // 2	3000/3600	90	**EMM09152-S-AP**	3GAA091520-ASK	M3AA 90LB 2	860	IPP	13.05	37	230D/400Y,50Hz; 460Y,60Hz	
	1500/1800	90	**EMM09154-S-AP**	3GAA092540-ASK	M3AA 90LD 4	924	IPP	13.05	42	230D/400Y,50Hz; 460Y,60Hz	
	1000/1200	100	**EMM10156-S-AP**	3GAA103560-ASK	M3AA 100LF 6	1,220	IPP	17.01	77	230D/400Y,50Hz; 460Y,60Hz	
2.2 // 3	3000/3600	90	**EMM09222-S-AP**	3GAA091530-ASK	M3AA 90LC 2	1,082	IPP	13.05	44	230D/400Y,50Hz; 460Y,60Hz	
	1500/1800	100	**EMM10224-S-AP**	3GAA102550-ASK	M3AA 100LE 4	1,134	IPP	17.01	79	230D/400Y,50Hz; 460Y,60Hz	
	1000/1200	112	**EMM11226-S-AP**	3GAA113330-ASK	M3AA 112MC 6	1,534	IPP	16.97	95	230D/400Y,50Hz; 460Y,60Hz	
3 // 4	3000/3600	100	**EMM10032-S-AP**	3GAA101530-ASK	M3AA 100LC 2	1,282	IPP	17.01	62	230D/400Y,50Hz; 460Y,60Hz	
	1500/1800	100	**EMM10034-S-AP**	3GAA102560-ASK	M3AA 100LF 4	1,347	IPP	17.01	79	230D/400Y,50Hz; 460Y,60Hz	
	1000/1200	132	**EMM13036-S-AP**	3GAA133330-ASK	M3AA 132MC 6	1,698	IPP	19.17	145	230D/400Y,50Hz; 460Y,60Hz	
4 // 5.3	3000/3600	112	**EMM11042-S-AP**	3GAA111320-ASK	M3AA 112MB 2	1,530	IPP	16.97	84	230D/400Y,50Hz; 460Y,60Hz	
	1500/1800	112	**EMM11044-S-AP**	3GAA112320-ASK	M3AA 112MB 4	1,600	IPP	16.97	97	230D/400Y,50Hz; 460Y,60Hz	
	1000/1200	132	**EMM13046-S-AP**	3GAA133340-ASK	M3AA 132MD 6	2,114	IPP	19.17	148	230D/400Y,50Hz; 460Y,60Hz	
5.5 // 7.3	3000/3600	132	**EMM13552-S-AP**	3GAA131120-ASK	M3AA 132SB 2	1,776	IPP	19.17	128	230D/400Y,50Hz; 460Y,60Hz	
	1500/1800	132	**EMM13554-S-AP**	3GAA132320-ASK	M3AA 132MB 4	1,830	IPP	19.17	150	230D/400Y,50Hz; 460Y,60Hz	
	1000/1200	132	**EMM13556-S-AP**	3GAA133350-ASK	M3AA 132ME 6	2,613	IPP	19.17	139	230D/400Y,50Hz; 460Y,60Hz	
7.5 // 10	3000/3600	132	**EMM13752-S-AP**	3GAA131130-ASK	M3AA 132SC 2	2,212	IPP	19.17	139	230D/400Y,50Hz; 460Y,60Hz	
	1500/1800	132	**EMM13754-S-AP**	3GAA132330-ASK	M3AA 132MC 4	2,309	IPP	19.17	150	230D/400Y,50Hz; 460Y,60Hz	
	1000/1200	160	**EMM16756-S-AP**	3GAA163410-ASK	M3AA 160MLA 6	2,754	IPP	22.99	275	230D/400Y,50Hz; 460Y,60Hz	

(a) See notes on inside back flap.
* Motors are stamped with kW only.
** Included variant codes are not shown in Product Code, please contact local sales office
Motors are suitable for use at 230VD, 60Hz
3 year warranty

Process Performance IEC aluminum, three phase, 50/60 Hz, 400/460VY

kW // Hp*	RPM	IEC Frame	Catalog Number	ABB Product Code**	ABB Type Number	List Price	Disc. Sym.	"L" Dim. (in)	Aprx. Wt. (lb)	Voltage	Notes (a)
IM B3 (1001), foot mounted (continued)											
11 // 14.7	3000/3600	160	**EMM16112-S-AP**	3GAA161410-ASK	M3AA 160MLA 2	2,542	IPP	22.99	234	230D/400Y,50Hz; 460Y,60Hz	
	1500/1800	160	**EMM16114-S-AP**	3GAA162410-ASK	M3AA 160MLA 4	2,593	IPP	22.99	277	230D/400Y,50Hz; 460Y,60Hz	
	1000/1200	160	**EMM16116-S-AP**	3GAA163420-ASK	M3AA 160MLB 6	3,758	IPP	26.81	306	230D/400Y,50Hz; 460Y,60Hz	
15 // 20	3000/3600	160	**EMM16152-S-AP**	3GAA161420-ASK	M3AA 160MLB 2	3,299	IPP	22.99	271	230D/400Y,50Hz; 460Y,60Hz	
	1500/1800	160	**EMM16154-S-AP**	3GAA162420-ASK	M3AA 160MLB 4	3,356	IPP	26.81	308	230D/400Y,50Hz; 460Y,60Hz	
	1000/1200	180	**EMM18156-S-AP**	3GAA183410-ASK	M3AA 180MLA 6	4,675	IPP	28.58	385	230D/400Y,50Hz; 460Y,60Hz	
18.5 // 24.6	3000/3600	160	**EMM16182-S-AP**	3GAA161430-ASK	M3AA 160MLC 2	3,959	IPP	26.81	302	230D/400Y,50Hz; 460Y,60Hz	
	1500/1800	180	**EMM18184-S-AP**	3GAA182410-ASK	M3AA 180MLA 4	4,188	IPP	28.58	389	230D/400Y,50Hz; 460Y,60Hz	
	1000/1200	200	**EMM20186-S-AP**	3GAA203410-ASK	M3AA 200MLA 6	6,109	IPP	32.32	502	230D/400Y,50Hz; 460Y,60Hz	
22 // 29.3	3000/3600	180	**EMM18222-S-AP**	3GAA181410-ASK	M3AA 180MLA 2	4,904	IPP	28.58	387	230D/400Y,50Hz; 460Y,60Hz	
	1500/1800	180	**EMM18224-S-AP**	3GAA182420-ASK	M3AA 180MLB 4	4,561	IPP	28.58	387	230D/400Y,50Hz; 460Y,60Hz	
	1000/1200	200	**EMM20226-S-AP**	3GAA203420-ASK	M3AA 200MLB 6	6,568	IPP	32.32	539	230D/400Y,50Hz; 460Y,60Hz	
30 // 40	3000/3600	200	**EMM20302-S-AP**	3GAA201410-ASK	M3AA 200MLA 2	6,138	IPP	32.32	518	230D/400Y,50Hz; 460Y,60Hz	
	1500/1800	200	**EMM20304-S-AP**	3GAA202410-ASK	M3AA 200MLA 4	6,368	IPP	32.32	542	230D/400Y,50Hz; 460Y,60Hz	
	1000/1200	225	**EMM22306-S-AP**	3GAA223210-ASK	M3AA 225SMA 6	8,950	IPP	34.65	705	230D/400Y,50Hz; 460Y,60Hz	
37 // 49.3	3000/3600	200	**EMM20372-S-AP**	3GAA201420-ASK	M3AA 200MLB 2	8,090	IPP	32.32	531	230D/400Y,50Hz; 460Y,60Hz	
	1500/1800	225	**EMM22374-S-AP**	3GAA222210-ASK	M3AA 225SMA 4	7,774	IPP	34.65	694	230D/400Y,50Hz; 460Y,60Hz	
	1000/1200	250	**EMM25376-S-AP**	3GAA253210-ASK	M3AA 250SMA 6	11,760	IPP	34.80	809	230D/400Y,50Hz; 460Y,60Hz	
45 // 60	3000/3600	225	**EMM22452-S-AP**	3GAA221210-ASK	M3AA 225SMA 2	9,695	IPP	33.46	719	230D/400Y,50Hz; 460Y,60Hz	
	1500/1800	225	**EMM22454-S-AP**	3GAA222220-ASK	M3AA 225SMB 4	8,520	IPP	34.65	696	230D/400Y,50Hz; 460Y,60Hz	
55 // 73.3	3000/3600	250	**EMM25552-S-AP**	3GAA251210-ASK	M3AA 250SMA 2	11,760	IPP	34.80	773	230D/400Y,50Hz; 460Y,60Hz	
	1500/1800	250	**EMM25554-S-AP**	3GAA252210-ASK	M3AA 250SMA 4	11,330	IPP	34.80	828	230D/400Y,50Hz; 460Y,60Hz	
IM B5 (3001), flange mounted, footless											
0.12 // 0.16	1500/1800	63	**MVM06124D-S-AP**	3GAA062311-BSF	M3AA 63A 4	421	IPP	8.43	9	230D/400Y,50Hz; 460Y,60Hz	
0.18 // 0.25	3000/3600	63	**MVM06182D-S-AP**	3GAA061311-BSF	M3AA 63A 2	413	IPP	8.43	9	230D/400Y,50Hz; 460Y,60Hz	
	1500/1800	63	**MVM06184D-S-AP**	3GAA062312-BSF	M3AA 63B 4	425	IPP	8.43	10	230D/400Y,50Hz; 460Y,60Hz	
0.25 // 0.33	3000/3600	63	**MVM06252D-S-AP**	3GAA061312-BSF	M3AA 63B 2	419	IPP	8.43	10	230D/400Y,50Hz; 460Y,60Hz	
	1500/1800	71	**MVM07254D-S-AP**	3GAA072311-BSE	M3AA 71A 4	444	IPP	9.45	11	230D/400Y,50Hz; 460Y,60Hz	
0.37 // 0.5	3000/3600	71	**MVM07372D-S-AP**	3GAA071311-BSE	M3AA 71A 2	458	IPP	9.45	11	230D/400Y,50Hz; 460Y,60Hz	
	1500/1800	71	**MVM07374D-S-AP**	3GAA072312-BSE	M3AA 71B 4	497	IPP	9.45	11	230D/400Y,50Hz; 460Y,60Hz	
0.55 // 0.75	3000/3600	71	**MVM07552D-S-AP**	3GAA071312-BSE	M3AA 71B 2	505	IPP	9.45	11	230D/400Y,50Hz; 460Y,60Hz	
	1500/1800	80	**MVM08554D-S-AP**	3GAA082311-BSE	M3AA 80A 4	540	IPP	10.45	19	230D/400Y,50Hz; 460Y,60Hz	
0.75 // 1	3000/3600	80	**EMVM08752D-S-AP**	3GAA081320-BSK	M3AA 80MB 2	760	IPP	10.45	21	230D/400Y,50Hz; 460Y,60Hz	
	1500/1800	80	**EMVM08754D-S-AP**	3GAA082350-BSK	M3AA 80ME 4	772	IPP	11.56	30	230D/400Y,50Hz; 460Y,60Hz	
	1000/1200	90	**EMVM09756D-S-AP**	3GAA093540-BSK	M3AA 90LD 6	951	IPP	13.05	42	230D/400Y,50Hz; 460Y,60Hz	
1.1 // 1.5	3000/3600	80	**EMVM08112D-S-AP**	3GAA081330-BSK	M3AA 80MC 2	815	IPP	10.45	23	230D/400Y,50Hz; 460Y,60Hz	
	1000/1200	100	**EMVM10116D-S-AP**	3GAA103550-BSK	M3AA 100LE 6	1,137	IPP	17.01	77	230D/400Y,50Hz; 460Y,60Hz	
	1500/1800	90	**EMVM09114D-S-AP**	3GAA092530-BSK	M3AA 90LC 4	885	IPP	13.05	77	230D/400Y,50Hz; 460Y,60Hz	
1.5 // 2	3000/3600	90	**EMVM09152D-S-AP**	3GAA091520-BSK	M3AA 90LB 2	959	IPP	13.05	37	230D/400Y,50Hz; 460Y,60Hz	
	1500/1800	90	**EMVM09154D-S-AP**	3GAA092540-BSK	M3AA 90LD 4	1,060	IPP	13.05	42	230D/400Y,50Hz; 460Y,60Hz	
	1000/1200	100	**EMVM10156D-S-AP**	3GAA103560-BSK	M3AA 100LF 6	1,320	IPP	17.01	77	230D/400Y,50Hz; 460Y,60Hz	
2.2 // 3	3000/3600	90	**EMVM09222D-S-AP**	3GAA091530-BSK	M3AA 90LC 2	1,189	IPP	13.05	44	230D/400Y,50Hz; 460Y,60Hz	
	1500/1800	100	**EMVM10224D-S-AP**	3GAA102550-BSK	M3AA 100LE 4	1,259	IPP	17.01	79	230D/400Y,50Hz; 460Y,60Hz	
	1000/1200	112	**EMVM11226D-S-AP**	3GAA113330-BSK	M3AA 112MC 6	1,633	IPP	16.97	95	230D/400Y,50Hz; 460Y,60Hz	
3 // 4	3000/3600	100	**EMVM10032D-S-AP**	3GAA101530-BSK	M3AA 100LC 2	1,411	IPP	17.01	62	230D/400Y,50Hz; 460Y,60Hz	
	1500/1800	100	**EMVM10034D-S-AP**	3GAA102560-BSK	M3AA 100LF 4	1,501	IPP	17.01	79	230D/400Y,50Hz; 460Y,60Hz	
	1000/1200	132	**EMVM13036D-S-AP**	3GAA133330-BSK	M3AA 132MC 6	2,052	IPP	19.17	145	230D/400Y,50Hz; 460Y,60Hz	
4 // 5.3	3000/3600	112	**EMVM11042D-S-AP**	3GAA111320-BSK	M3AA 112MB 2	1,688	IPP	16.97	84	230D/400Y,50Hz; 460Y,60Hz	
	1500/1800	112	**EMVM11044D-S-AP**	3GAA112320-BSK	M3AA 112MB 4	1,752	IPP	16.97	97	230D/400Y,50Hz; 460Y,60Hz	
	1000/1200	132	**EMVM13046D-S-AP**	3GAA133340-BSK	M3AA 132MD 6	2,220	IPP	19.17	148	230D/400Y,50Hz; 460Y,60Hz	
5.5 // 7.3	3000/3600	132	**EMVM13552D-S-AP**	3GAA131120-BSK	M3AA 132SB 2	1,959	IPP	19.17	128	230D/400Y,50Hz; 460Y,60Hz	
	1500/1800	132	**EMVM13554D-S-AP**	3GAA132320-BSK	M3AA 132MB 4	1,996	IPP	19.17	150	230D/400Y,50Hz; 460Y,60Hz	
	1000/1200	132	**EMVM13556D-S-AP**	3GAA133350-BSK	M3AA 132ME 6	2,699	IPP	19.17	139	230D/400Y,50Hz; 460Y,60Hz	
7.5 // 10	3000/3600	132	**EMVM13752D-S-AP**	3GAA131130-BSK	M3AA 132SC 2	2,378	IPP	19.17	139	230D/400Y,50Hz; 460Y,60Hz	
	1500/1800	132	**EMVM13754D-S-AP**	3GAA132330-BSK	M3AA 132MC 4	2,518	IPP	19.17	150	230D/400Y,50Hz; 460Y,60Hz	

(a) See notes on inside back flap.
* Motors are stamped with kW only.
** Included variant codes are not shown in Product Code, please contact local sales office
Motors are suitable for use at 230VD, 60Hz
3 year warranty

Process Performance IEC aluminum, three phase, 50/60 Hz, 400/460VY

kW // Hp*	RPM	IEC Frame	Catalog Number	ABB Product Code**	ABB Type Number	List Price	Disc. Sym.	"L" Dim. (in)	Aprx. Wt. (lb)	Voltage	Notes (a)
IM B14 (3601), face mounted, footless											
0.18 // 0.25	3000/3600	63	**MVM06182C-S-AP**	3GAA061311-CSF	M3AA 63A 2	413	IPP	8.43	9	230D/400Y,50Hz; 460Y,60Hz	
	1500/1800	63	**MVM06184C-S-AP**	3GAA062312-CSF	M3AA 63B 4	425	IPP	8.43	10	230D/400Y,50Hz; 460Y,60Hz	
0.25 // 0.33	3000/3600	63	**MVM06252C-S-AP**	3GAA061312-CSF	M3AA 63B 2	419	IPP	8.43	10	230D/400Y,50Hz; 460Y,60Hz	
	1500/1800	71	**MVM07254C-S-AP**	3GAA072311-CSE	M3AA 71A 4	444	IPP	9.45	11	230D/400Y,50Hz; 460Y,60Hz	
0.37 // 0.5	3000/3600	71	**MVM07372C-S-AP**	3GAA071311-CSE	M3AA 71A 2	458	IPP	9.45	11	230D/400Y,50Hz; 460Y,60Hz	
	1500/1800	71	**MVM07374C-S-AP**	3GAA072312-CSE	M3AA 71B 4	497	IPP	9.45	11	230D/400Y,50Hz; 460Y,60Hz	
0.55 // 0.75	3000/3600	71	**MVM07552C-S-AP**	3GAA071312-CSE	M3AA 71B 2	505	IPP	9.45	11	230D/400Y,50Hz; 460Y,60Hz	
	1500/1800	80	**MVM08554C-S-AP**	3GAA082311-CSE	M3AA 80A 4	540	IPP	10.45	19	230D/400Y,50Hz; 460Y,60Hz	
0.75 // 1	3000/3600	80	**EMVM08752C-S-AP**	3GAA081320-CSK	M3AA 80MB 2	760	IPP	10.45	21	230D/400Y,50Hz; 460Y,60Hz	
	1500/1800	80	**EMVM08754C-S-AP**	3GAA082350-CSK	M3AA 80ME 4	772	IPP	11.56	30	230D/400Y,50Hz; 460Y,60Hz	
	1000/1200	90	**EMVM09756C-S-AP**	3GAA093540-CSK	M3AA 90LD 6	951	IPP	13.05	42	230D/400Y,50Hz; 460Y,60Hz	
1.1 // 1.5	3000/3600	80	**EMVM08112C-S-AP**	3GAA081330-CSK	M3AA 80MC 2	815	IPP	10.45	23	230D/400Y,50Hz; 460Y,60Hz	
	1000/1200	100	**EMVM10116C-S-AP**	3GAA103550-CSK	M3AA 100LE 6	1,137	IPP	17.01	77	230D/400Y,50Hz; 460Y,60Hz	
	1500/1800	90	**EMVM09114C-S-AP**	3GAA092530-CSK	M3AA 90LC 4	885	IPP	13.05	77	230D/400Y,50Hz; 460Y,60Hz	
1.5 // 2	3000/3600	90	**EMVM09152C-S-AP**	3GAA091520-CSK	M3AA 90LB 2	959	IPP	13.05	37	230D/400Y,50Hz; 460Y,60Hz	
	1500/1800	90	**EMVM09154C-S-AP**	3GAA092540-CSK	M3AA 90LD 4	1,060	IPP	13.05	42	230D/400Y,50Hz; 460Y,60Hz	
	1000/1200	100	**EMVM10156C-S-AP**	3GAA103560-CSK	M3AA 100LF 6	1,320	IPP	17.01	77	230D/400Y,50Hz; 460Y,60Hz	
2.2 // 3	3000/3600	90	**EMVM09222C-S-AP**	3GAA091530-CSK	M3AA 90LC 2	1,189	IPP	13.05	44	230D/400Y,50Hz; 460Y,60Hz	
	1500/1800	100	**EMVM10224C-S-AP**	3GAA102550-CSK	M3AA 100LE 4	1,259	IPP	17.01	79	230D/400Y,50Hz; 460Y,60Hz	
	1000/1200	112	**EMVM11226C-S-AP**	3GAA113330-CSK	M3AA 112MC 6	1,633	IPP	16.97	95	230D/400Y,50Hz; 460Y,60Hz	
3 // 4	3000/3600	100	**EMVM10032C-S-AP**	3GAA101530-CSK	M3AA 100LC 2	1,411	IPP	17.01	62	230D/400Y,50Hz; 460Y,60Hz	
	1500/1800	100	**EMVM10034C-S-AP**	3GAA102560-CSK	M3AA 100LF 4	1,501	IPP	17.01	79	230D/400Y,50Hz; 460Y,60Hz	
	1000/1200	132	**EMVM13036C-S-AP**	3GAA133330-CSK	M3AA 132MC 6	2,052	IPP	19.17	145	230D/400Y,50Hz; 460Y,60Hz	
4 // 5.3	3000/3600	112	**EMVM11042C-S-AP**	3GAA111320-CSK	M3AA 112MB 2	1,688	IPP	16.97	84	230D/400Y,50Hz; 460Y,60Hz	
	1500/1800	112	**EMVM11044C-S-AP**	3GAA112320-CSK	M3AA 112MB 4	1,752	IPP	16.97	97	230D/400Y,50Hz; 460Y,60Hz	
	1000/1200	132	**EMVM13046C-S-AP**	3GAA133340-CSK	M3AA 132MD 6	2,220	IPP	19.17	148	230D/400Y,50Hz; 460Y,60Hz	
5.5 // 7.3	3000/3600	132	**EMVM13552C-S-AP**	3GAA131120-CSK	M3AA 132SB 2	1,959	IPP	19.17	128	230D/400Y,50Hz; 460Y,60Hz	
	1500/1800	132	**EMVM13554C-S-AP**	3GAA132320-CSK	M3AA 132MB 4	1,996	IPP	19.17	150	230D/400Y,50Hz; 460Y,60Hz	
	1000/1200	132	**EMVM13556C-S-AP**	3GAA133350-CSK	M3AA 132ME 6	2,699	IPP	19.17	139	230D/400Y,50Hz; 460Y,60Hz	
7.5 // 10	3000/3600	132	**EMVM13752C-S-AP**	3GAA131130-CSK	M3AA 132SC 2	2,378	IPP	19.17	139	230D/400Y,50Hz; 460Y,60Hz	
	1500/1800	132	**EMVM13754C-S-AP**	3GAA132330-CSK	M3AA 132MC 4	2,518	IPP	19.17	150	230D/400Y,50Hz; 460Y,60Hz	

(a) See notes on inside back flap.
* Motors are stamped with kW only.
** Included variant codes are not shown in Product Code, please contact local sales office
Motors are suitable for use at 230VD, 60Hz
3 year warranty

Process Performance IEC cast iron, three phase, 50/60 Hz, 400/460V

0.25-90 kW (0.33-125 Hp)

IP55

Features:

- Rugged cast iron construction (including endplates)
- IE3 efficiency per IEC 60034-30-1 (2014) (80 frame and above) All motors are compliant with DOE and NRCan
- Complies with EU MEPS/EcoDesign Regulation (EU) 2019/1781 effective July 2021. CE marked.
- 6 post terminal block in large, F3 terminal box provides easier, lower cost installation
- Class F insulation with Class B temperature limits
- Inverter ready 2:1CT and 20:1VT
- Painting system C3M acc. to ISO 12944-5:2007
- (3) PTC thermistors, 150 °C standard on sizes 71-280
- IC411 enclosure (TEFC)

Applications:

- Pumps
- Compressors
- Fans
- Conveyors
- General machinery

kW // Hp*	RPM	IEC Frame	Catalog Number	ABB Product Code**	ABB Type Number	List Price	Disc. Sym.	"L" Dim. (in)	Aprx. Wt. (lb)	Voltage	Notes (a)
IM B3 (1001), foot mounted											
0.25 // 0.33	1500/1800	71	**MM07254-S-PP**	3GBP072321-ASB	M3BP 71MA 4	418	IPP	10.39	22	230D/400Y,50Hz; 460Y,60Hz	
	1000/1200	80	**EMM08256-S-PP**	3GBP083310-ASK	M3BP 80MA 6	641	IPP	13.03	31	230D/400Y,50Hz; 460Y,60Hz	
0.37 // 0.50	3000/3600	71	**MM07372-S-PP**	3GBP071321-ASB	M3BP 71MA 2	435	IPP	10.39	24	230D/400Y,50Hz; 460Y,60Hz	
	1500/1800	71	**MM07374-S-PP**	3GBP072322-ASB	M3BP 71MB 4	472	IPP	10.39	24	230D/400Y,50Hz; 460Y,60Hz	
	1000/1200	80	**EMM08376-S-PP**	3GBP083340-ASK	M3BP 80MD 6	709	IPP	13.03	35	230D/400Y,50Hz; 460Y,60Hz	
0.55 // 0.75	3000/3600	71	**MM07552-S-PP**	3GBP071322-ASB	M3BP 71MB 2	482	IPP	10.39	24	230D/400Y,50Hz; 460Y,60Hz	
	1500/1800	80	**EMM08554-S-PP**	3GBP082440-ASK	M3BP 80MLD 4	655	IPP	14.29	44	230D/400Y,50Hz; 460Y,60Hz	
	1000/1200	80	**EMM08556-S-PP**	3GBP083470-ASK	M3BP 80MLG 6	806	IPP	14.29	46	230D/400Y,50Hz; 460Y,60Hz	
0.75 // 1	3000/3600	80	**EMM08752-S-PP**	3GBP081340-ASK	M3BP 80MD 2	741	IPP	13.03	40	230D/400Y,50Hz; 460Y,60Hz	
	1500/1800	80	**EMM08754-S-PP**	3GBP082470-ASK	M3BP 80MLG 4	770	IPP	14.29	49	230D/400Y,50Hz; 460Y,60Hz	
	1000/1200	90	**EMM09756-S-PP**	3GBP093570-ASK	M3BP 90LG 6	972	IPP	15.35	75	230D/400Y,50Hz; 460Y,60Hz	
1.1 // 1.5	3000/3600	80	**EMM08112-S-PP**	3GBP081370-ASK	M3BP 80MG 2	806	IPP	13.03	42	230D/400Y,50Hz; 460Y,60Hz	
	1000/1200	100	**EMM10116-S-PP**	3GBP103870-ASK	M3BP 100LKG 6	1,191	IPP	17.13	104	230D/400Y,50Hz; 460Y,60Hz	
	1500/1800	90	**EMM09114-S-PP**	3GBP092530-ASK	M3BP 90LC 4	878	IPP	15.35	73	230D/400Y,50Hz; 460Y,60Hz	
1.5 // 2	3000/3600	90	**EMM09152-S-PP**	3GBP091520-ASK	M3BP 90LB 2	961	IPP	15.35	68	230D/400Y,50Hz; 460Y,60Hz	
	1500/1800	90	**EMM09154-S-PP**	3GBP092540-ASK	M3BP 90LD 4	1,032	IPP	15.35	75	230D/400Y,50Hz; 460Y,60Hz	
	1000/1200	112	**EMM11156-S-PP**	3GBP113380-ASK	M3BP 112MH 6	1,363	IPP	17.40	117	230D/400Y,50Hz; 460Y,60Hz	
2.2 // 3	3000/3600	90	**EMM09222-S-PP**	3GBP091530-ASK	M3BP 90LC 2	1,209	IPP	15.35	77	230D/400Y,50Hz; 460Y,60Hz	
	1500/1800	100	**EMM10224-S-PP**	3GBP102810-ASK	M3BP 100LKA 4	1,267	IPP	17.13	108	230D/400Y,50Hz; 460Y,60Hz	
	1000/1200	132	**EMM13226-S-PP**	3GBP133230-ASK	M3BP 132SMC 6	1,713	IPP	20.94	179	230D/400Y,50Hz; 460Y,60Hz	
3 // 4	3000/3600	100	**EMM10032-S-PP**	3GBP101810-ASK	M3BP 100LKA 2	1,432	IPP	17.13	110	230D/400Y,50Hz; 460Y,60Hz	
	1500/1800	100	**EMM10034-S-PP**	3GBP102820-ASK	M3BP 100LKB 4	1,504	IPP	17.13	108	230D/400Y,50Hz; 460Y,60Hz	
	1000/1200	132	**EMM13036-S-PP**	3GBP133240-ASK	M3BP 132SMD 6	2,131	IPP	20.94	181	230D/400Y,50Hz; 460Y,60Hz	
4 // 5.3	3000/3600	112	**EMM11042-S-PP**	3GBP111370-ASK	M3BP 112MG 2	1,709	IPP	17.40	123	230D/400Y,50Hz; 460Y,60Hz	
	1500/1800	112	**EMM11044-S-PP**	3GBP112370-ASK	M3BP 112MG 4	1,788	IPP	17.40	115	230D/400Y,50Hz; 460Y,60Hz	
	1000/1200	132	**EMM13046-S-PP**	3GBP133270-ASK	M3BP 132SMG 6	2,652	IPP	20.94	181	230D/400Y,50Hz; 460Y,60Hz	
5.5 // 7.5	3000/3600	132	**EMM13552-D-PP**	3GBP131260-ADK	M3BP 132SMF 2	2,227	IPP	20.94	170	400D/415D/690Y,50Hz; 460D,60Hz	25
	1500/1800	132	**EMM13554-D-PP**	3GBP132260-ADK	M3BP 132SMF 4	2,296	IPP	20.94	179	400D/415D/690Y,50Hz; 460D,60Hz	25
	1000/1200	132	**EMM13556-D-PP**	3GBP133280-ADK	M3BP 132SMH 6	3,278	IPP	20.94	174	400D/415D/690Y,50Hz; 460D,60Hz	25
7.5 // 10	3000/3600	132	**EMM13752-D-PP**	3GBP131270-ADK	M3BP 132SMG 2	2,774	IPP	20.94	170	400D/415D/690Y,50Hz; 460D,60Hz	25
	1500/1800	132	**EMM13754-D-PP**	3GBP132270-ADK	M3BP 132SMG 4	2,897	IPP	20.94	179	400D/415D/690Y,50Hz; 460D,60Hz	25

(a) See notes on inside back flap.
Cast iron frame
* Motors are stamped with kW only.
** Included variant codes are not shown in Product Code, please contact local sales office
Catalog numbers with (-D-) are not suitable for VFD operation at 690VY.
Catalog numbers with (-S-) are suitable for use on 230VD, 60Hz
3 year warranty

Process Performance IEC cast iron, three phase, 50/60 Hz, 400/460V

kW // Hp*	RPM	IEC Frame	Catalog Number	ABB Product Code**	ABB Type Number	List Price	Disc. Sym.	"L" Dim. (in)	Aprx. Wt. (lb)	Voltage	Notes (a)
IM B3 (1001), foot mounted (continued)											
11 // 15	3000/3600	160	**EMM16112-D-PPN**	3GBP161410-ADK	M3BP 160MLA 2	3,505	IPP	22.99	311	400D/415D/690Y,50Hz; 460D,60Hz	25
	1500/1800	160	**EMM16114-D-PPN**	3GBP162410-ADK	M3BP 160MLA 4	3,252	IPP	22.99	382	400D/415D/690Y,50Hz; 460D,60Hz	25
15 // 20	3000/3600	160	**EMM16152-D-PPN**	3GBP161420-ADK	M3BP 160MLB 2	4,533	IPP	22.99	375	400D/415D/690Y,50Hz; 460D,60Hz	25
	1500/1800	160	**EMM16154-D-PPN**	3GBP162420-ADK	M3BP 160MLB 4	4,187	IPP	26.81	413	400D/415D/690Y,50Hz; 460D,60Hz	25
18.5 // 25	3000/3600	160	**EMM16182-D-PPN**	3GBP161430-ADK	M3BP 160MLC 2	5,005	IPP	26.81	403	400D/415D/690Y,50Hz; 460D,60Hz	25
	1500/1800	180	**EMM18184-D-PPN**	3GBP182410-ADK	M3BP 180MLA 4	4,775	IPP	28.58	519	400D/415D/690Y,50Hz; 460D,60Hz	25
22 // 30	3000/3600	180	**EMM18222-D-PPN**	3GBP181410-ADK	M3BP 180MLA 2	5,593	IPP	28.58	516	400D/415D/690Y,50Hz; 460D,60Hz	25
	1500/1800	180	**EMM18224-D-PPN**	3GBP182420-ADK	M3BP 180MLB 4	5,725	IPP	28.58	519	400D/415D/690Y,50Hz; 460D,60Hz	25
30 // 40	3000/3600	200	**EMM20302-D-PPN**	3GBP201410-ADK	M3BP 200MLA 2	7,000	IPP	32.32	657	400D/415D/690Y,50Hz; 460D,60Hz	25
	1500/1800	200	**EMM20304-D-PPN**	3GBP202410-ADK	M3BP 200MLA 4	7,262	IPP	32.32	703	400D/415D/690Y,50Hz; 460D,60Hz	25
37 // 50	3000/3600	200	**EMM20372-D-PPN**	3GBP201420-ADK	M3BP 200MLB 2	9,224	IPP	32.32	692	400D/415D/690Y,50Hz; 460D,60Hz	25
	1500/1800	225	**EMM22374-D-PPN**	3GBP222210-ADK	M3BP 225SMA 4	8,865	IPP	34.65	877	400D/415D/690Y,50Hz; 460D,60Hz	25
45 // 60	3000/3600	225	**EMM22452-D-PPN**	3GBP221210-ADK	M3BP 225SMA 2	11,057	IPP	33.46	692	400D/415D/690Y,50Hz; 460D,60Hz	25
	1500/1800	225	**EMM22454-D-PPN**	3GBP222220-ADK	M3BP 225SMB 4	10,697	IPP	34.65	877	400D/415D/690Y,50Hz; 460D,60Hz	25
55 // 75	3000/3600	250	**EMM25552-D-PPN**	3GBP251210-ADK	M3BP 250SMA 2	13,412	IPP	34.80	997	400D/415D/690Y,50Hz; 460D,60Hz	25
	1500/1800	250	**EMM25554-D-PPN**	3GBP252210-ADK	M3BP 250SMA 4	12,920	IPP	34.80	1049	400D/415D/690Y,50Hz; 460D,60Hz	25
75 // 100	3000/3600	280	**EMM28752-D-PP**	3GBP281220-ADK	M3BP 280SMB 2	20,113	IPP	34.80	1466	400D/415D/690Y,50Hz; 460D,60Hz	25
	1500/1800	280	**EMM28754-D-PP**	3GBP282220-ADK	M3BP 280SMB 4	19,429	IPP	34.80	1466	400D/415D/690Y,50Hz; 460D,60Hz	25
90 // 125	3000/3600	280	**EMM28902-D-PP**	3GBP281230-ADK	M3BP 280SMC 2	24,143	IPP	34.80	1598	400D/415D/690Y,50Hz; 460D,60Hz	25
	1500/1800	280	**EMM28904-D-PP**	3GBP282230-ADK	M3BP 280SMC 4	22,704	IPP	34.80	1598	400D/415D/690Y,50Hz; 460D,60Hz	25
IM B5 (3001), flange mounted, footless											
0.25 // 0.33	1000/1200	80	**EMVM08256D-S-PP**	3GBP083310-BSK	M3BP 80MA 6	745	IPP	13.03	31	230D/400Y,50Hz; 460Y,60Hz	
0.37 // 0.50	1000/1200	80	**EMVM08376D-S-PP**	3GBP083340-BSK	M3BP 80MD 6	806	IPP	13.03	35	230D/400Y,50Hz; 460Y,60Hz	
0.55 // 0.75	1500/1800	80	**EMVM08554D-S-PP**	3GBP082440-BSK	M3BP 80MLD 4	766	IPP	14.29	44	230D/400Y,50Hz; 460Y,60Hz	
	1000/1200	80	**EMVM08556D-S-PP**	3GBP083470-BSK	M3BP 80MLG 6	910	IPP	14.29	46	230D/400Y,50Hz; 460Y,60Hz	
0.75 // 1	3000/3600	80	**EMVM08752D-S-PP**	3GBP081340-BSK	M3BP 80MD 2	849	IPP	13.03	40	230D/400Y,50Hz; 460Y,60Hz	
	1500/1800	80	**EMVM08754D-S-PP**	3GBP082470-BSK	M3BP 80MLG 4	864	IPP	14.29	49	230D/400Y,50Hz; 460Y,60Hz	
	1000/1200	90	**EMVM09756D-S-PP**	3GBP093570-BSK	M3BP 90LG 6	1,061	IPP	15.35	75	230D/400Y,50Hz; 460Y,60Hz	
1.1 // 1.5	3000/3600	80	**EMVM08112D-S-PP**	3GBP081370-BSK	M3BP 80MG 2	910	IPP	13.03	42	230D/400Y,50Hz; 460Y,60Hz	
	1000/1200	100	**EMVM10116D-S-PP**	3GBP103870-BSK	M3BP 100LKG 6	1,270	IPP	17.13	104	230D/400Y,50Hz; 460Y,60Hz	
	1500/1800	90	**EMVM09114D-S-PP**	3GBP092530-BSK	M3BP 90LC 4	989	IPP	15.35	73	230D/400Y,50Hz; 460Y,60Hz	
1.5 // 2	3000/3600	90	**EMVM09152D-S-PP**	3GBP091520-BSK	M3BP 90LB 2	1,072	IPP	15.35	68	230D/400Y,50Hz; 460Y,60Hz	
	1500/1800	90	**EMVM09154D-S-PP**	3GBP092540-BSK	M3BP 90LD 4	1,184	IPP	15.35	75	230D/400Y,50Hz; 460Y,60Hz	
	1000/1200	112	**EMVM11156D-S-PP**	3GBP113380-BSK	M3BP 112MH 6	1,475	IPP	17.40	117	230D/400Y,50Hz; 460Y,60Hz	
2.2 // 3	3000/3600	90	**EMVM09222D-S-PP**	3GBP091530-BSK	M3BP 90LC 2	1,328	IPP	15.35	77	230D/400Y,50Hz; 460Y,60Hz	
	1500/1800	100	**EMVM10224D-S-PP**	3GBP102810-BSK	M3BP 100LKA 4	1,407	IPP	17.13	108	230D/400Y,50Hz; 460Y,60Hz	
	1000/1200	132	**EMVM13226D-S-PP**	3GBP133230-BSK	M3BP 132SMC 6	1,825	IPP	20.94	179	230D/400Y,50Hz; 460Y,60Hz	
3 // 4	3000/3600	100	**EMVM10032D-S-PP**	3GBP101810-BSK	M3BP 100LKA 2	1,576	IPP	17.13	110	230D/400Y,50Hz; 460Y,60Hz	
	1500/1800	100	**EMVM10034D-S-PP**	3GBP102820-BSK	M3BP 100LKB 4	1,677	IPP	17.13	108	230D/400Y,50Hz; 460Y,60Hz	
	1000/1200	132	**EMVM13036D-S-PP**	3GBP133240-BSK	M3BP 132SMD 6	2,292	IPP	20.94	181	230D/400Y,50Hz; 460Y,60Hz	
4 // 5.3	3000/3600	112	**EMVM11042D-S-PP**	3GBP111370-BSK	M3BP 112MG 2	1,886	IPP	17.40	123	230D/400Y,50Hz; 460Y,60Hz	
	1500/1800	112	**EMVM11044D-S-PP**	3GBP112370-BSK	M3BP 112MG 4	1,957	IPP	17.40	115	230D/400Y,50Hz; 460Y,60Hz	
	1000/1200	132	**EMVM13046D-S-PP**	3GBP133270-BSK	M3BP 132SMG 6	2,785	IPP	20.94	181	230D/400Y,50Hz; 460Y,60Hz	
5.5 // 7.5	3000/3600	132	**EMVM13552D-D-PP**	3GBP131260-BDK	M3BP 132SMF 2	2,458	IPP	20.94	170	400D/415D/690Y,50Hz; 460D,60Hz	25
	1500/1800	132	**EMVM13554D-D-PP**	3GBP132260-BDK	M3BP 132SMF 4	2,504	IPP	20.94	179	400D/415D/690Y,50Hz; 460D,60Hz	25
	1000/1200	132	**EMVM13556D-D-PP**	3GBP133280-BDK	M3BP 132SMH 6	3,386	IPP	20.94	174	400D/415D/690Y,50Hz; 460D,60Hz	25
7.5 // 10	3000/3600	132	**EMVM13752D-D-PP**	3GBP131270-BDK	M3BP 132SMG 2	2,983	IPP	20.94	170	400D/415D/690Y,50Hz; 460D,60Hz	25
	1500/1800	132	**EMVM13754D-D-PP**	3GBP132270-BDK	M3BP 132SMG 4	3,159	IPP	20.94	179	400D/415D/690Y,50Hz; 460D,60Hz	25

(a) See notes on inside back flap.
Cast iron frame
* Motors are stamped with kW only.
** Included variant codes are not shown in Product Code, please contact local sales office
Catalog numbers with (-D-) are not suitable for VFD operation at 690VY.
Catalog numbers with (-S-) are suitable for use on 230VD, 60Hz
3 year warranty

Process Performance IEC cast iron, three phase, 50/60 Hz, 400/460V

kW // Hp*	RPM	IEC Frame	Catalog Number	ABB Product Code**	ABB Type Number	List Price	Disc. Sym.	"L" Dim. (in)	Aprx. Wt. (lb)	Voltage	Notes (a)
IM B14 (3601), face mounted, footless											
0.25 // 0.33	1000/1200	80	**EMVM08256C-S-PP**	3GBP083310-BSK	M3BP 80MA 6	745	IPP	13.03	31	230D/400Y,50Hz; 460Y,60Hz	
0.37 // 0.50	1000/1200	80	**EMVM08376C-S-PP**	3GBP083340-BSK	M3BP 80MD 6	806	IPP	13.03	35	230D/400Y,50Hz; 460Y,60Hz	
0.55 // 0.75	1500/1800	80	**EMVM08554C-S-PP**	3GBP082440-BSK	M3BP 80MLD 4	766	IPP	14.29	44	230D/400Y,50Hz; 460Y,60Hz	
	1000/1200	80	**EMVM08556C-S-PP**	3GBP083470-BSK	M3BP 80MLG 6	910	IPP	14.29	46	230D/400Y,50Hz; 460Y,60Hz	
0.75 // 1	3000/3600	80	**EMVM08752C-S-PP**	3GBP081340-BSK	M3BP 80MD 2	849	IPP	13.03	40	230D/400Y,50Hz; 460Y,60Hz	
	1500/1800	80	**EMVM08754C-S-PP**	3GBP082470-BSK	M3BP 80MLG 4	864	IPP	14.29	49	230D/400Y,50Hz; 460Y,60Hz	
	1000/1200	90	**EMVM09756C-S-PP**	3GBP093570-BSK	M3BP 90LG 6	1,061	IPP	15.35	75	230D/400Y,50Hz; 460Y,60Hz	
1.1 // 1.5	3000/3600	80	**EMVM08112C-S-PP**	3GBP081370-BSK	M3BP 80MG 2	910	IPP	13.03	42	230D/400Y,50Hz; 460Y,60Hz	
	1000/1200	100	**EMVM10116C-S-PP**	3GBP103870-BSK	M3BP 100LKG 6	1,270	IPP	17.13	104	230D/400Y,50Hz; 460Y,60Hz	
	1500/1800	90	**EMVM09114C-S-PP**	3GBP092530-BSK	M3BP 90LC 4	989	IPP	15.35	73	230D/400Y,50Hz; 460Y,60Hz	
1.5 // 2	3000/3600	90	**EMVM09152C-S-PP**	3GBP091520-BSK	M3BP 90LB 2	1,072	IPP	15.35	68	230D/400Y,50Hz; 460Y,60Hz	
	1500/1800	90	**EMVM09154C-S-PP**	3GBP092540-BSK	M3BP 90LD 4	1,184	IPP	15.35	75	230D/400Y,50Hz; 460Y,60Hz	
	1000/1200	112	**EMVM11156C-S-PP**	3GBP113380-BSK	M3BP 112MH 6	1,475	IPP	17.40	117	230D/400Y,50Hz; 460Y,60Hz	
2.2 // 3	3000/3600	90	**EMVM09222C-S-PP**	3GBP091530-BSK	M3BP 90LC 2	1,328	IPP	15.35	77	230D/400Y,50Hz; 460Y,60Hz	
	1500/1800	100	**EMVM10224C-S-PP**	3GBP102810-BSK	M3BP 100LKA 4	1,407	IPP	17.13	108	230D/400Y,50Hz; 460Y,60Hz	
	1000/1200	132	**EMVM13226C-S-PP**	3GBP133230-BSK	M3BP 132SMC 6	1,825	IPP	20.94	179	230D/400Y,50Hz; 460Y,60Hz	
3 // 4	3000/3600	100	**EMVM10032C-S-PP**	3GBP101810-BSK	M3BP 100LKA 2	1,576	IPP	17.13	110	230D/400Y,50Hz; 460Y,60Hz	
	1500/1800	100	**EMVM10034C-S-PP**	3GBP102820-BSK	M3BP 100LKB 4	1,677	IPP	17.13	108	230D/400Y,50Hz; 460Y,60Hz	
	1000/1200	132	**EMVM13036C-S-PP**	3GBP133240-BSK	M3BP 132SMD 6	2,292	IPP	20.94	181	230D/400Y,50Hz; 460Y,60Hz	
4 // 5.3	3000/3600	112	**EMVM11042C-S-PP**	3GBP111370-BSK	M3BP 112MG 2	1,886	IPP	17.40	123	230D/400Y,50Hz; 460Y,60Hz	
	1500/1800	112	**EMVM11044C-S-PP**	3GBP112370-BSK	M3BP 112MG 4	1,957	IPP	17.40	115	230D/400Y,50Hz; 460Y,60Hz	
	1000/1200	132	**EMVM13046C-S-PP**	3GBP133270-BSK	M3BP 132SMG 6	2,785	IPP	20.94	181	230D/400Y,50Hz; 460Y,60Hz	
5.5 // 7.5	3000/3600	132	**EMVM13552C-D-PP**	3GBP131260-BDK	M3BP 132SMF 2	2,458	IPP	20.94	170	400D/415D/690Y,50Hz; 460D,60Hz	25
	1500/1800	132	**EMVM13554C-D-PP**	3GBP132260-BDK	M3BP 132SMF 4	2,504	IPP	20.94	179	400D/415D/690Y,50Hz; 460D,60Hz	25
	1000/1200	132	**EMVM13556C-D-PP**	3GBP133280-BDK	M3BP 132SMH 6	3,386	IPP	20.94	174	400D/415D/690Y,50Hz; 460D,60Hz	25
7.5 // 10	3000/3600	132	**EMVM13752C-D-PP**	3GBP131270-BDK	M3BP 132SMG 2	2,983	IPP	20.94	170	400D/415D/690Y,50Hz; 460D,60Hz	25
	1500/1800	132	**EMVM13754C-D-PP**	3GBP132270-BDK	M3BP 132SMG 4	3,159	IPP	20.94	179	400D/415D/690Y,50Hz; 460D,60Hz	25

(a) See notes on inside back flap.
Cast iron frame
* Motors are stamped with kW only.
** Included variant codes are not shown in Product Code, please contact local sales office
Catalog numbers with (-D-) are not suitable for VFD operation at 690VY.
Catalog numbers with (-S-) are suitable for use on 230VD, 60Hz
3 year warranty

NEW!

Metric IEC flanges for Process Performance aluminum (M3AA) and cast iron (M3BP) motors (safe area)

Frame Size	Type (Material)	Poles	Motor Generation	Bolt Circle "M" Dimension (mm)	Catalog Number	List Price	Disc. Sym.	Weight (lb)
B5 machined flange only								
63	M3AA	2,4,6	F	115	**M3AA063115-B5**	85	SVC	1
71	M3AA	2,4,6	E	130	**M3AA071130-B5**	108	SVC	1
	M3BP	2,4,6	B	130	**M3BP071130-B5**	97	SVC	5
80	M3AA	2,4,6	K	165	**M3AA080165-B5**	145	SVC	1
	M3BP	2,4,6	K	165	**M3BP080165-B5**	115	SVC	7
90	M3AA	2,4,6	K	165	**M3AA090165-B5**	115	SVC	2
	M3BP	2,4,6	K	165	**M3BP090165-B5**	133	SVC	9
100	M3AA	2,4,6	K	215	**M3AA100215-B5**	295	SVC	3
	M3BP	2,4,6	K	215	**M3BP100215-B5**	191	SVC	11
112	M3AA	2,4,6	K	215	**M3AA112215-B5**	309	SVC	14
	M3BP	2,4,6	K	215	**M3BP112215-B5**	321	SVC	10
132	M3AA	2,4,6	K	265	**M3AA132265-B5**	336	SVC	14
	M3BP	2,4,6	K	265	**M3BP132265-B5**	351	SVC	21
160	M3AA	2,4,6	K	300	**M3AA160300-B5**	455	SVC	40
	M3BP	2,4,6	K	300	**M3BP160300-B5**	470	SVC	31
180	M3AA	2,4,6	K	300	**M3AA180300-B5**	798	SVC	54
	M3BP	2,4,6	K	300	**M3BP180300-B5**	693	SVC	37
200	M3AA	2,4,6	K	350	**M3AA200350-B5**	1,005	SVC	57
	M3BP	2,4,6	K	350	**M3BP200350-B5**	1,071	SVC	49
225	M3AA	2,4,6	K	400	**M3AA225400-B5**	1,574	SVC	63
	M3BP	2,4,6	K	400	**M3BP225400-B5**	1,298	SVC	63
250	M3AA	2,4,6	K	500	**M3AA250500-B5**	1,923	SVC	95
	M3BP	2,4,6	K	500	**M3BP250500-B5**	1,923	SVC	85
280	M3BP	2	K	500	**M3BP280500-B5-2P**	1,327	SVC	97
	M3BP	4,6	K	500	**M3BP280500-B5**	1,327	SVC	95
B14 machined flange only								
63	M3AA	2,4,6	F	75	**M3AA063075-B14**	87	SVC	1
71	M3AA	2,4,6	E	85	**M3AA071085-B14 ***	108	SVC	1
	M3BP	2,4,6	B	85	**M3BP071085-B14**	81	SVC	3
80	M3AA	2,4,6	K	100	**M3AA080100-B14 ****	145	SVC	1
	M3BP	2,4,6	K	100	**M3BP080100-B14**	100	SVC	4
90	M3AA	2,4,6	K	115	**M3AA090115-B14**	189	SVC	2
	M3BP	2,4,6	K	115	**M3BP090115-B14**	133	SVC	6
100	M3AA	2,4,6	K	130	**M3AA100130-B14**	297	SVC	2
	M3BP	2,4,6	K	130	**M3BP100130-B14**	193	SVC	8
112	M3AA	2,4,6	K	130	**M3AA112130-B14**	309	SVC	7
	M3BP	2,4,6	K	130	**M3BP112130-B14**	321	SVC	7
132	M3AA	2,4,6	K	165	**M3AA132165-B14**	372	SVC	11
	M3BP	2,4,6	K	165	**M3BP132165-B14**	351	SVC	13
160	M3AA	2,4,6	K	215	**M3AA160215-B14**	455	SVC	27

Cast iron frame

Red catalog number indicates **NEW** product.

* Bearing retainer, 3GVC071046-B is required when adding flange to B3 motor

** Bearing retainer, 3GVC081046-A is required when adding flange to B3 motor.

Please contact your sales office representative for delivery.

NEW!

Food Safe IEC stainless steel, three phase, totally enclosed, encapsulated, 50/60 Hz, 400/460VY

0.18 kW-7.5 kW (0.25-10 Hp)

IP69 for Water

Features:

- Stainless steel AISI 304
- Epoxy encapsulated windings
- IE3 efficiency per IEC 60034-30-1 (2014) (80 frame and above). All motors are compliant with DOE and NRCan
- Complies with EU MEPS/EcoDesign Regulation (EU) 2019/1781 effective July 2021. CE marked.
- Heat stabilized bearings with H1 food grade grease
- Laser engraved nameplate
- Inverter ready
- Rotatable terminal box cover with F3 mounting

Applications:

- Food processing
- Pumps and Wastewater
- Outdoors
- High pressure washdown
- Caustic environment

kW // Hp*	RPM	IEC Frame	Enclosure	Catalog Number	ABB Product Code	ABB Type Number	List Price	Disc. Sym.	"L" Dim. (in)	Aprx. Wt. (lb)	Notes (a)
IM B3 (1001), foot mounted											
0.18 // 0.24	1000/1200	71	IC410/TENV	**SSEWDM07186-B**	3GMA073310-ASB	M3MA 71MA 6	2,977	IFS	12.20	33	
0.25 // 0.33	1500/1800	71	IC410/TENV	**SSEWDM07254-B**	3GMA072320-ASB	M3MA 71MB 4	2,939	IFS	12.20	44	
	1000/1200	71	IC410/TENV	**SSEWDM07256-B**	3GMA073320-ASB	M3MA 71MB 6	3,113	IFS	12.20	35	
0.37 // 0.5	1500/1800	80	IC410/TENV	**SSEWDM08374-B**	3GMA082310-ASB	M3MA 80MA 4	2,977	IFS	13.94	51	
	1000/1200	80	IC410/TENV	**SSEWDM08376-B**	3GMA083310-ASB	M3MA 80MA 6	3,219	IFS	13.94	51	
0.55 // 0.73	3000/3600	80	IC410/TENV	**SSEWDM08552-B**	3GMA081310-ASB	M3MA 80MA 2	2,977	IFS	13.94	51	
	1500/1800	80	IC410/TENV	**SSEWDM08554-B**	3GMA082320-ASB	M3MA 80MB 4	3,113	IFS	13.94	51	
	1000/1200	90	IC410/TENV	**SSEWDM09556-B**	3GMA093310-ASB	M3MA 90MA 6	3,541	IFS	17.15	106	
0.75 // 1	3000/3600	80	IC410/TENV	**SSEWDM08752-B**	3GMA081320-ASB	M3MA 80MB 2	3,113	IFS	13.94	51	
	1500/1800	80	IC410/TENV	**SSEWDM08754-B**	3GMA082330-ASB	M3MA 80MC 4	3,219	IFS	13.94	51	
	1000/1200	90	IC410/TENV	**SSEWDM09756-B**	3GMA093320-ASB	M3MA 90MB 6	3,891	IFS	17.15	115	
1.1 // 1.5	3000/3600	80	IC410/TENV	**SSEWDM08112-B**	3GMA081330-ASB	M3MA 80MC 2	3,219	IFS	13.94	51	
	1500/1800	90	IC410/TENV	**SSEWDM09114-B**	3GMA092310-ASB	M3MA 90MA 4	3,541	IFS	17.15	106	
1.5 // 2	3000/3600	90	IC410/TENV	**SSEWDM09152-B**	3GMA091310-ASB	M3MA 90MA 2	3,929	IFS	17.15	115	
	1500/1800	90	IC410/TENV	**SSEWDM09154-B**	3GMA092320-ASB	M3MA 90MB 4	3,891	IFS	17.15	115	
	1000/1200	100	IC411/TEFC	**SSEWDM10156-B**	3GMA103510-ASB	M3MA 100LA 6	5,441	IFS	18.92	128	
2.2 // 3	3000/3600	90	IC410/TENV	**SSEWDM09222-B**	3GMA091320-ASB	M3MA 90MA 2	4,119	IFS	17.15	115	
	1500/1800	100	IC411/TEFC	**SSEWDM10224-B**	3GMA102510-ASB	M3MA 100LA 4	4,986	IFS	18.92	126	
	1000/1200	112	IC411/TEFC	**SSEWDM11226-B**	3GMA113510-ASB	M3MA 112LA 6	6,196	IFS	18.92	130	
3 // 4	3000/3600	100	IC411/TEFC	**SSEWDM10032-B**	3GMA101510-ASB	M3MA 100LA 2	5,441	IFS	18.92	133	
	1500/1800	100	IC411/TEFC	**SSEWDM10034-B**	3GMA102520-ASB	M3MA 100LB 4	5,441	IFS	18.92	126	
	1000/1200	132	IC411/TEFC	**SSEWDM13036-B**	3GMA133510-ASB	M3MA 132LA 6	7,254	IFS	22.81	148	
4 // 5	3000/3600	112	IC411/TEFC	**SSEWDM11042-B**	3GMA111510-ASB	M3MA 112MA 2	6,196	IFS	18.92	134	
	1500/1800	112	IC411/TEFC	**SSEWDM11044-B**	3GMA112510-ASB	M3MA 112LA 4	6,196	IFS	18.92	134	
	1000/1200	132	IC411/TEFC	**SSEWDM13046-B**	3GMA133520-ASB	M3MA 132LB 6	7,632	IFS	22.81	148	
5.5 // 7.3	3000/3600	132	IC411/TEFC	**SSEWDM13552-B**	3GMA131510-ASB	M3MA 132LA 2	7,254	IFS	22.81	152	
	1500/1800	132	IC411/TEFC	**SSEWDM13554-B**	3GMA132510-ASB	M3MA 132LA 4	7,254	IFS	22.81	161	
7.5 // 10	3000/3600	132	IC411/TEFC	**SSEWDM13752-B**	3GMA131520-ASB	M3MA 132LB 2	7,632	IFS	22.81	165	
	1500/1800	132	IC411/TEFC	**SSEWDM13754-B**	3GMA132520-ASB	M3MA 132LB 4	7,632	IFS	22.81	181	
IM B5 (3001), flange mounted, footless											
0.18 // 0.24	1000/1200	71	IC410/TENV	**SSEWDM07186D-B**	3GMA073310-BSB	M3MA 71MA 6	2,803	IFS	12.20	33	
0.25 // 0.33	1500/1800	71	IC410/TENV	**SSEWDM07254D-B**	3GMA072320-BSB	M3MA 71MB 4	2,761	IFS	12.20	44	
	1000/1200	71	IC410/TENV	**SSEWDM07256D-B**	3GMA073320-BSB	M3MA 71MB 6	2,943	IFS	12.20	35	
0.37 // 0.5	1500/1800	80	IC410/TENV	**SSEWDM08374D-B**	3GMA082310-BSB	M3MA 80MA 4	2,803	IFS	13.94	51	
	1000/1200	80	IC410/TENV	**SSEWDM08376D-B**	3GMA083310-BSB	M3MA 80MA 6	3,034	IFS	13.94	51	
0.55 // 0.73	3000/3600	80	IC410/TENV	**SSEWDM08552D-B**	3GMA081310-BSB	M3MA 80MA 2	2,803	IFS	13.94	51	
	1500/1800	80	IC410/TENV	**SSEWDM08554D-B**	3GMA082320-BSB	M3MA 80MB 4	2,943	IFS	13.94	51	
	1000/1200	90	IC410/TENV	**SSEWDM09556D-B**	3GMA093310-BSB	M3MA 90MA 6	3,333	IFS	17.15	106	

(a) See notes on inside back flap.
* Motors are stamped with kW only. Motors are usable at 230VD, 60Hz
3 year warranty

Food Safe IEC stainless steel, three phase, totally enclosed, encapsulated, 50/60 Hz, 400/460VY

kW // Hp*	RPM	IEC Frame	Enclosure	Catalog Number	ABB Product Code	ABB Type Number	List Price	Disc. Sym.	"L" Dim. (in)	Aprx. Wt. (lb)	Notes (a)
IM B5 (3001), flange mounted, footless (continued)											
0.75 // 1	3000/3600	80	IC410/TENV	**SSEWDM08752D-B**	3GMA081320-BSB	M3MA 80MB 2	2,943	IFS	13.94	51	
	1500/1800	80	IC410/TENV	**SSEWDM08754D-B**	3GMA082330-BSB	M3MA 80MC 4	3,034	IFS	13.94	51	
	1000/1200	90	IC410/TENV	**SSEWDM09756D-B**	3GMA093320-BSB	M3MA 90MB 6	3,642	IFS	17.15	115	
1.1 // 1.5	3000/3600	80	IC410/TENV	**SSEWDM08112D-B**	3GMA081330-BSB	M3MA 80MC 2	3,034	IFS	13.94	51	
	1500/1800	90	IC410/TENV	**SSEWDM09114D-B**	3GMA092310-BSB	M3MA 90MA 4	3,333	IFS	17.15	106	
1.5 // 2	3000/3600	90	IC410/TENV	**SSEWDM09152D-B**	3GMA091310-BSB	M3MA 90MA 2	3,687	IFS	17.15	115	
	1500/1800	90	IC410/TENV	**SSEWDM09154D-B**	3GMA092320-BSB	M3MA 90MB 4	3,642	IFS	17.15	115	
	1000/1200	100	IC411/TEFC	**SSEWDM10156D-B**	3GMA103510-BSB	M3MA 100LA 6	5,138	IFS	18.92	128	
2.2 // 3	3000/3600	90	IC410/TENV	**SSEWDM09222D-B**	3GMA091320-BSB	M3MA 90MA 2	3,891	IFS	17.15	115	
	1500/1800	100	IC411/TEFC	**SSEWDM10224D-B**	3GMA102510-BSB	M3MA 100LA 4	4,685	IFS	18.92	126	
	1000/1200	112	IC411/TEFC	**SSEWDM11226D-B**	3GMA113510-BSB	M3MA 112LA 6	5,855	IFS	18.92	130	
3 // 4	3000/3600	100	IC411/TEFC	**SSEWDM10032D-B**	3GMA101510-BSB	M3MA 100LA 2	5,138	IFS	18.92	133	
	1500/1800	100	IC411/TEFC	**SSEWDM10034D-B**	3GMA102520-BSB	M3MA 100LB 4	5,138	IFS	18.92	126	
	1000/1200	132	IC411/TEFC	**SSEWDM13036D-B**	3GMA133510-BSB	M3MA 132LA 6	6,801	IFS	22.81	148	
4 // 5	3000/3600	112	IC411/TEFC	**SSEWDM11042D-B**	3GMA111510-BSB	M3MA 112MA 2	5,855	IFS	18.92	134	
	1500/1800	112	IC411/TEFC	**SSEWDM11044D-B**	3GMA112510-BSB	M3MA 112LA 4	5,855	IFS	18.92	134	
	1000/1200	132	IC411/TEFC	**SSEWDM13046D-B**	3GMA133520-BSB	M3MA 132LB 6	7,216	IFS	22.81	148	
5.5 // 7.3	3000/3600	132	IC411/TEFC	**SSEWDM13552D-B**	3GMA131510-BSB	M3MA 132LA 2	6,801	IFS	22.81	152	
	1500/1800	132	IC411/TEFC	**SSEWDM13554D-B**	3GMA132510-BSB	M3MA 132LA 4	6,801	IFS	22.81	161	
7.5 // 10	3000/3600	132	IC411/TEFC	**SSEWDM13752D-B**	3GMA131520-BSB	M3MA 132LB 2	7,216	IFS	22.81	165	
	1500/1800	132	IC411/TEFC	**SSEWDM13754D-B**	3GMA132520-BSB	M3MA 132LB 4	7,216	IFS	22.81	181	
IM B14 (3601), face mounted, footless											
0.18 // 0.24	1000/1200	71	IC410/TENV	**SSEWDM07186C-B**	3GMA073310-CSB	M3MA 71MA 6	2,803	IFS	12.20	33	
0.25 // 0.33	1500/1800	71	IC410/TENV	**SSEWDM07254C-B**	3GMA072320-CSB	M3MA 71MB 4	2,761	IFS	12.20	44	
	1000/1200	71	IC410/TENV	**SSEWDM07256C-B**	3GMA073320-CSB	M3MA 71MB 6	2,943	IFS	12.20	35	
0.37 // 0.5	1500/1800	80	IC410/TENV	**SSEWDM08374C-B**	3GMA082310-CSB	M3MA 80MA 4	2,803	IFS	13.94	51	
	1000/1200	80	IC410/TENV	**SSEWDM08376C-B**	3GMA083310-CSB	M3MA 80MA 6	3,034	IFS	13.94	51	
0.55 // 0.73	3000/3600	80	IC410/TENV	**SSEWDM08552C-B**	3GMA081310-CSB	M3MA 80MA 2	2,803	IFS	13.94	51	
	1500/1800	80	IC410/TENV	**SSEWDM08554C-B**	3GMA082320-CSB	M3MA 80MB 4	2,943	IFS	13.94	51	
	1000/1200	90	IC410/TENV	**SSEWDM09556C-B**	3GMA093310-CSB	M3MA 90MA 6	3,333	IFS	17.15	106	
0.75 // 1	3000/3600	80	IC410/TENV	**SSEWDM08752C-B**	3GMA081320-CSB	M3MA 80MB 2	2,943	IFS	13.94	51	
	1500/1800	80	IC410/TENV	**SSEWDM08754C-B**	3GMA082330-CSB	M3MA 80MC 4	3,034	IFS	13.94	51	
	1000/1200	90	IC410/TENV	**SSEWDM09756C-B**	3GMA093320-CSB	M3MA 90MB 6	3,642	IFS	17.15	115	
1.1 // 1.5	3000/3600	80	IC410/TENV	**SSEWDM08112C-B**	3GMA081330-CSB	M3MA 80MC 2	3,034	IFS	13.94	51	
	1500/1800	90	IC410/TENV	**SSEWDM09114C-B**	3GMA092310-CSB	M3MA 90MA 4	3,333	IFS	17.15	106	
1.5 // 2	3000/3600	90	IC410/TENV	**SSEWDM09152C-B**	3GMA091310-CSB	M3MA 90MA 2	3,687	IFS	17.15	115	
	1500/1800	90	IC410/TENV	**SSEWDM09154C-B**	3GMA092320-CSB	M3MA 90MB 4	3,642	IFS	17.15	115	
	1000/1200	100	IC411/TEFC	**SSEWDM10156C-B**	3GMA103510-CSB	M3MA 100LA 6	5,138	IFS	18.92	128	
2.2 // 3	3000/3600	90	IC410/TENV	**SSEWDM09222C-B**	3GMA091320-CSB	M3MA 90MA 2	3,891	IFS	17.15	115	
	1500/1800	100	IC411/TEFC	**SSEWDM10224C-B**	3GMA102510-CSB	M3MA 100LA 4	4,685	IFS	18.92	126	
	1000/1200	112	IC411/TEFC	**SSEWDM11226C-B**	3GMA113510-CSB	M3MA 112LA 6	5,855	IFS	18.92	130	
3 // 4	3000/3600	100	IC411/TEFC	**SSEWDM10032C-B**	3GMA101510-CSB	M3MA 100LA 2	5,138	IFS	18.92	133	
	1500/1800	100	IC411/TEFC	**SSEWDM10034C-B**	3GMA102520-CSB	M3MA 100LB 4	5,138	IFS	18.92	126	
	1000/1200	132	IC411/TEFC	**SSEWDM13036C-B**	3GMA133510-CSB	M3MA 132LA 6	6,801	IFS	22.81	148	
4 // 5	3000/3600	112	IC411/TEFC	**SSEWDM11042C-B**	3GMA111510-CSB	M3MA 112MA 2	5,855	IFS	18.92	134	
	1500/1800	112	IC411/TEFC	**SSEWDM11044C-B**	3GMA112510-CSB	M3MA 112LA 4	5,855	IFS	18.92	134	
	1000/1200	132	IC411/TEFC	**SSEWDM13046C-B**	3GMA133520-CSB	M3MA 132LB 6	7,216	IFS	22.81	148	
5.5 // 7.3	3000/3600	132	IC411/TEFC	**SSEWDM13552C-B**	3GMA131510-CSB	M3MA 132LA 2	6,801	IFS	22.81	152	
	1500/1800	132	IC411/TEFC	**SSEWDM13554C-B**	3GMA132510-CSB	M3MA 132LA 4	6,801	IFS	22.81	161	
7.5 // 10	3000/3600	132	IC411/TEFC	**SSEWDM13752C-B**	3GMA131520-CSB	M3MA 132LB 2	7,216	IFS	22.81	165	
	1500/1800	132	IC411/TEFC	**SSEWDM13754C-B**	3GMA132520-CSB	M3MA 132LB 4	7,216	IFS	22.81	181	

(a) See notes on inside back flap.
* Motors are stamped with kW only.
Motors are usable at 230VD, 60Hz
3 year warranty

NEW!

IEC Zone 2 & 22 and Div 2 Increased Safety, three phase, 50/60 Hz

ATEX/IECEx: Ex ec IIC T3 Gc, Ex tc IIIC T125C Dc
UL: Class I, Div 2 Group A, B, C & D, T3, Class II, Div 2 Group F & G, T4
0.37 - 90 kW

IP66

Features:

- IM B3 (1001), foot mounted
- IE3 efficiency per IEC 60034-30-1 (2014). All motors are compliant with DOE and NRCan
- Complies with EU MEPS/EcoDesign Regulation (EU) 2019/1781 effective July 2021. CE marked.
- Cast iron frame and endplates are standard
- Inverter ready*
- 6 post terminal block in large F3 terminal box provides easier, lower cost installation
- Class F insulation with Class B temperature limits
- Painting system C3M acc. to ISO 12944-5
- IC411/TEFC
- (3) PTC thermistors, 150 °C standard

Applications:

- Pumps
- Compressors
- Fans
- Conveyors

kW	RPM	IEC Frame	Catalog Number	ABB Type Number	List Price	Disc. Sym.	"L" Dim. (in)	Aprx. Wt. (lb)	Voltage	Notes (a)
0.37	1500/1800	71	**3GGP072450-ASLUS01**	M3GP 71MLE 4	1,657	IHA	10.40	33	230D/400Y/415Y,50Hz; 440Y/460Y,60Hz	2, 9
0.55	1500/1800	80	**3GGP082440-ASKUS02**	M3GP 80MLD 4	1,766	IHA	14.30	44	220D/230D/380Y/400Y/415Y,50Hz; 460Y,60Hz	2, 9
0.75	1500/1800	80	**3GGP082470-ASKUS02**	M3GP 80MLG 4	1,846	IHA	14.30	49	220D/230D/380Y/400Y/415Y,50Hz; 460Y,60Hz	2, 9
1.1	1500/1800	90	**3GGP092530-ASKUS02**	M3GP 90LC 4	2,004	IHA	15.35	73	220D/230D/380Y/400Y/415Y,50Hz; 460Y,60Hz	2, 9
			3GGP092530-ADKUS02	M3GP 90LC 4	2,004	IHA	15.35	73	380D/400D/415D/660Y/690Y,50Hz; 460D,60Hz	2, 9, 25
1.5	1500/1800	90	**3GGP092540-ASKUS02**	M3GP 90LD 4	2,171	IHA	15.35	75	220D/230D/380Y/400Y/415Y,50Hz; 460Y,60Hz	2, 9
			3GGP092540-ADKUS02	M3GP 90LD 4	2,171	IHA	15.35	75	380D/400D/415D/660Y/690Y,50Hz; 460D,60Hz	2, 9, 25
2.2	1500/1800	100	**3GGP102810-ASKUS02**	M3GP 100LKA 4	2,418	IHA	17.13	108	220D/230D/380Y/400Y/415Y,50Hz; 460Y,60Hz	2, 9
			3GGP102810-ADKUS02	M3GP 100LKA 4	2,418	IHA	17.13	108	380D/400D/415D/660Y/690Y,50Hz; 460D,60Hz	2, 9, 25
3	1500/1800	100	**3GGP102820-ASKUS02**	M3GP 100LKB 4	2,737	IHA	17.13	108	220D/230D/380Y/400Y/415Y,50Hz; 460Y,60Hz	2, 9
			3GGP102820-ADKUS02	M3GP 100LKB 4	2,737	IHA	17.13	108	380D/400D/415D/660Y/690Y,50Hz; 460D,60Hz	2, 9, 25
4	1500/1800	112	**3GGP112370-ASKUS02**	M3GP 112MG 4	3,042	IHA	17.40	115	220D/230D/380Y/400Y/415Y,50Hz; 460Y,60Hz	2, 9
			3GGP112370-ADKUS02	M3GP 112MG 4	3,042	IHA	17.40	115	380D/400D/415D/660Y/690Y,50Hz; 460D,60Hz	2, 9, 25
5.5	1500/1800	132	**3GGP132260-ASKUS02**	M3GP 132SMF 4	3,533	IHA	20.95	179	220D/230D/380Y/400Y/415Y,50Hz; 460Y,60Hz	2, 9
			3GGP132260-ADKUS02	M3GP 132SMF 4	3,533	IHA	20.95	179	380D/400D/415D/660Y/690Y,50Hz; 460D,60Hz	2, 9, 25
7.5	1500/1800	132	**3GGP132270-ASKUS02**	M3GP 132SMG 4	4,027	IHA	20.95	179	220D/230D/380Y/400Y/415Y,50Hz; 460Y,60Hz	2, 9
			3GGP132270-ADKUS02	M3GP 132SMG 4	4,027	IHA	20.95	179	380D/400D/415D/660Y/690Y,50Hz; 460D,60Hz	2, 9, 25
11	1500/1800	160	**3GGP162410-ADKUS02**	M3GP 160MLA 4	5,476	IHA	26.81	414	380D/400D/415D/660Y/690Y,50Hz; 460D,60Hz	2, 9, 25
15	1500/1800	160	**3GGP162420-ADKUS02**	M3GP 160MLB 4	6,477	IHA	26.81	414	380D/400D/415D/660Y/690Y,50Hz; 460D,60Hz	2, 9, 25
18.5	1500/1800	180	**3GGP182410-ADKUS02**	M3GP 180MLA 4	7,292	IHA	28.58	518	380D/400D/415D/660Y/690Y,50Hz; 460D,60Hz	2, 9, 25
22	1500/1800	180	**3GGP182420-ADKUS02**	M3GP 180MLB 4	8,527	IHA	28.58	518	380D/400D/415D/660Y/690Y,50Hz; 460D,60Hz	2, 9, 25
30	1500/1800	200	**3GGP202410-ADKUS02**	M3GP 200MLA 4	10,340	IHA	32.32	703	380D/400D/415D/660Y/690Y,50Hz; 460D,60Hz	2, 9, 25
37	1500/1800	225	**3GGP222210-ADKUS02**	M3GP 225SMA 4	12,243	IHA	33.43	877	380D/400D/415D/660Y/690Y,50Hz; 460D,60Hz	2, 9, 25
45	1500/1800	225	**3GGP222220-ADKUS02**	M3GP 225SMB 4	14,711	IHA	33.43	877	380D/400D/415D/660Y/690Y,50Hz; 460D,60Hz	2, 9, 25
55	1500/1800	250	**3GGP252210-ADKUS02**	M3GP 250SMA 4	17,478	IHA	34.80	1049	380D/400D/415D/660Y/690Y,50Hz; 460D,60Hz	2, 9, 25
75	1500/1800	280	**3GGP282220-ADKUS03**	M3GP 280SMB 4	29,231	IHA	42.83	1466	380D/400D/415D/660Y/690Y,50Hz; 460D,60Hz	2, 9, 25
90	1500/1800	280	**3GGP282230-ADKUS03**	M3GP 280SMC 4	32,570	IHA	42.83	1598	380D/400D/415D/660Y/690Y,50Hz; 460D,60Hz	2, 9, 25

(a) See notes on inside back flap. Cast iron frame
Red catalog number indicates **NEW** product.
Motors are stamped with kW only.
* The above motors are suitable for VFD operation according to standard ABB loadability curves when nominal supply voltage of converter is Un ≤ 500 V with the addition of appropriate modification(s). Motors are not suitable for VFD operation at 660/690V.
For sizing or further details, please contact your sales representative.
2 year warranty

NEW!

NEW!

IEC Zone 1 Flameproof, three phase, 50/60 Hz, for export only

ATEX/IECEx: Ex db eb IIC T4 Gb

0.55-90 kW

IP56

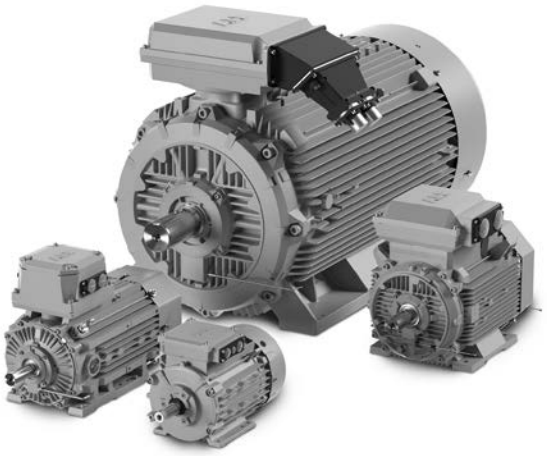

Features:

- IM B3 (1001), foot mounted
- IE3 efficiency per IEC 60034-30-1 (2014)
- Complies with EU MEPS/EcoDesign Regulation (EU) 2019/1781 effective July 2021. CE marked.
- Cast iron frame and endplates are standard
- Inverter ready*
- 6 post terminal block in large F3 terminal box provides easier, lower cost installation
- Class F insulation with Class B temperature limits
- Painting system C3M acc. to ISO 12944-5
- IC411/TEFC
- (3) PTC thermistors, 150 °C standard

Applications:

- Pumps
- Compressors
- Fans
- Conveyors

kW	RPM	IEC Frame	Catalog Number	ABB Type Number	List Price	Disc. Sym.	"L" Dim. (in)	Aprx. Wt. (lb)	Voltage	Notes (a)
0.55	1500/1800	80	**3GKP082440-ASKUS04**	M3KP 80MLD 4	3,285	IHA	16.10	88	220D/230D/380Y/400Y/415Y,50Hz; 460Y,60Hz	2, 9
			3GKP082440-ADKUS04	M3KP 80MLD 4	3,285	IHA	16.10	88	380D/400D/415D/660Y/690Y,50Hz; 460D,60Hz	2, 9, 25
0.75	1500/1800	80	**3GKP082470-ASKUS04**	M3KP 80MLG 4	3,382	IHA	16.10	90	220D/230D/380Y/400Y/415Y,50Hz; 460Y,60Hz	2, 9
			3GKP082470-ADKUS04	M3KP 80MLG 4	3,382	IHA	16.10	90	380D/400D/415D/660Y/690Y,50Hz; 460D,60Hz	2, 9, 25
1.1	1500/1800	90	**3GKP092030-ASKUS04**	M3KP 90SLC 4	3,679	IHA	17.32	115	220D/230D/380Y/400Y/415Y, 50Hz; 460Y,60Hz	2, 9
			3GKP092030-ADKUS04	M3KP 90SLC 4	3,679	IHA	17.32	115	380D/400D/415D/660Y/690Y,50Hz; 460D,60Hz	2, 9, 25
1.5	1500/1800	90	**3GKP092540-ASKUS04**	M3KP 90LD 4	3,926	IHA	17.32	117	220D/230D/380Y/400Y/415Y,50Hz; 460Y,60Hz	2, 9
			3GKP092540-ADKUS04	M3KP 90LD 4	3,926	IHA	17.32	117	380D/400D/415D/660Y/690Y,50Hz; 460D,60Hz	2, 9, 25
2.2	1500/1800	100	**3GKP102810-ASKUS04**	M3KP 100LKA 4	4,444	IHA	19.65	154	220D/230D/380Y/400Y/415Y,50Hz; 460Y,60Hz	2, 9
			3GKP102810-ADKUS04	M3KP 100LKA 4	4,444	IHA	19.65	154	380D/400D/415D/660Y/690Y,50Hz; 460D,60Hz	2, 9, 25
3	1500/1800	100	**3GKP102820-ASKUS04**	M3KP 100LKB 4	4,882	IHA	19.65	154	220D/230D/380Y/400Y/415Y,50Hz; 460Y,60Hz	2, 9
			3GKP102820-ADKUS04	M3KP 100LKB 4	4,882	IHA	19.65	154	380D/400D/415D/660Y/690Y,50Hz; 460D,60Hz	2, 9, 25
4	1500/1800	112	**3GKP112370-ASKUS04**	M3KP 112MG 4	5,686	IHA	19.10	157	220D/230D/380Y/400Y/415Y,50Hz; 460Y,60Hz	2, 9
			3GKP112370-ADKUS04	M3KP 112MG 4	5,686	IHA	19.10	157	380D/400D/415D/660Y/690Y,50Hz; 460D,60Hz	2, 9, 25
5.5	1500/1800	132	**3GKP132260-ASKUS04**	M3KP 132SMF 4	6,651	IHA	22.68	243	220D/230D/380Y/400Y/415Y,50Hz; 460Y,60Hz	2, 9
			3GKP132260-ADKUS04	M3KP 132SMF 4	6,651	IHA	22.68	243	380D/400D/415D/660Y/690Y,50Hz; 460D,60Hz	2, 9, 25
7.5	1500/1800	132	**3GKP132270-ASKUS04**	M3KP 132SMG 4	7,553	IHA	22.68	243	220D/230D/380Y/400Y/415Y,50Hz; 460Y,60Hz	2, 9
			3GKP132270-ADKUS04	M3KP 132SMG 4	7,553	IHA	22.68	243	380D/400D/415D/660Y/690Y,50Hz; 460D,60Hz	2, 9, 25
11	1500/1800	160	**3GKP162410-ADKUS04**	M3KP 160MLA 4	9,145	IHA	31.81	516	380D/400D/415D/660Y/690Y,50Hz; 460D,60Hz	2, 9, 25
15	1500/1800	160	**3GKP162420-ADKUS04**	M3KP 160MLB 4	10,847	IHA	31.81	558	380D/400D/415D/660Y/690Y,50Hz; 460D,60Hz	2, 9, 25
18.5	1500/1800	180	**3GKP182410-ADKUS04**	M3KP 180MLA 4	13,578	IHA	32.52	628	380D/400D/415D/660Y/690Y,50Hz; 460D,60Hz	2, 9, 25
22	1500/1800	180	**3GKP182420-ADKUS04**	M3KP 180MLB 4	14,747	IHA	27.80	639	380D/400D/415D/660Y/690Y,50Hz; 460D,60Hz	2, 9, 25
30	1500/1800	200	**3GKP202410-ADKUS04**	M3KP 200MLA 4	18,333	IHA	32.44	750	380D/400D/415D/660Y/690Y,50Hz; 460D,60Hz	2, 9, 25
37	1500/1800	225	**3GKP222210-ADKUS04**	M3KP 225SMA 4	22,230	IHA	35.47	869	380D/400D/415D/660Y/690Y,50Hz; 460D,60Hz	2, 9, 25
45	1500/1800	225	**3GKP222220-ADKUS04**	M3KP 225SMB 4	24,667	IHA	35.47	950	380D/400D/415D/660Y/690Y,50Hz; 460D,60Hz	2, 9, 25
55	1500/1800	250	**3GKP252210-ADKUS04**	M3KP 250SMA 4	29,956	IHA	35.24	974	380D/400D/415D/660Y/690Y,50Hz; 460D,60Hz	2, 9, 25
75	1500/1800	280	**3GKP282220-ADKUS04**	M3KP 280SMB 4	41,300	IHA	42.91	1475	380D/400D/415D/660Y/690Y,50Hz; 460D,60Hz	2, 9, 25
90	1500/1800	280	**3GKP282230-ADKUS05**	M3KP 280SMC 4	45,641	IHA	42.91	1607	380D/400D/415D/660Y/690Y,50Hz; 460D,60Hz	2, 9, 25

(a) See notes on inside back flap. Cast iron frame

Red catalog number indicates **NEW** product.

Motors are stamped with kW only.

* The above motors are suitable for VFD operation according to standard ABB loadability curves when nominal supply voltage of converter is Un ≤ 500 V with the addition of appropriate modification(s). Motors are not suitable for VFD operation at 660/690V.

For sizing or further details, please contact your sales representative.

2 year warranty

NEW!

Metric IEC, three phase, 60 Hz, TEFC, foot mounted

1.1 thru 15 kW (1.5 thru 20 Hp)

IP54

Features:

- IEC-B3 mount
- Conforms to IEC 60072-1 & IEC 60034-1
- Ball bearings with locked DE bearing
- Heavy gauge steel frames
- Gasketed conduit box

Applications:

- Pumps
- Fans
- Conveyors
- Machine tools
- Gear reducers

kW/Hp	RPM	IEC Frame	Catalog Number	List Price	Disc. Sym.	"L" Dim. (in)	Aprx. Wt. (lb)	Full Load Efficiency	60 Hz Voltage	Full Load Amps	60 Hz Use in US	Notes (a)
1.1/1.5	1800	D90S	**EMM3554**	1,359	BIM	13.00	44	86.5	230/460	2.2	Yes	30
1.5/2	1800	D90L	**EMM3558**	1,386	BIM	13.00	45	86.5	230/460	2.9	Yes	30
2.2/3	3600	D90L	**EMM3559**	1,561	BIM	13.87	51	86.5	230/460	3.6	Yes	30
	1800	D100L	**EMM3611**	1,556	BIM	15.76	71	89.5	230/460	4.2	Yes	
3.7/5	3600	D100L	**EMM3613**	1,581	BIM	15.76	78	88.5	230/460	5.6	Yes	30
	1800	D112M	**EMM3615**	1,689	BIM	17.66	90	89.5	230/460	6.7	Yes	30
5.5/7.5	3600	D132S	**EMM3709**	2,386	BIM	17.66	118	89.5	230/460	9	Yes	30
	1800	D132S	**EMM3710**	2,417	BIM	18.79	151	91.7	230/460	9.5	Yes	30
7.5/10	3600	D132S	**EMM3711**	2,500	BIM	17.66	119	90.2	230/460	11.8	Yes	30
	1800	D132M	**EMM3714**	2,733	BIM	20.29	165	91.7	230/460	12	Yes	30
11/15	1800	D160M	**EMM2333**	3,932	BIM	23.64	250	92.4	230/460	18.1	Yes	30
15/20	1800	D160L	**EMM2334**	4,774	BIM	23.63	313	93	230/460	25	Yes	30

(a) See notes on inside back flap.
Cast iron frame

Metric IEC, three phase, 60 Hz, TEFC, B5 flange

0.25 thru 7.5 kW (.33 thru 10 Hp)

IP54

Features:

- IEC – B5 flange mount
- Conforms to IEC 60072-1 & IEC 60034-1
- Ball bearings with locked DE bearing
- Heavy gauge steel frames
- Gasketed conduit box

Applications:

- Pumps
- Fans
- Conveyors
- Machine tools
- Gear reducers

kW/Hp	RPM	IEC Frame	Catalog Number	List Price	Disc. Sym.	"L" Dim. (in)	Aprx. Wt. (lb)	Full Load Efficiency	60 Hz Voltage	Full Load Amps	60 Hz Use in US	Notes (a)
.25/.33	1800	D71D	**MVM3458D**	953	BIM	10.74	20	74	230/460	0.7	Yes	30
.37/.50	1800	D71D	**MVM3461D**	958	BIM	10.74	20	71	230/460	1.2	Yes	1, 30
.55/.75	1800	D80D	**MVM3542D**	1,011	BIM	10.73	27	75.5	208-230/460	1.5	Yes	12, 30
.75/1	3600	D80D	**EMVM3545D**	1,359	BIM	10.73	27	77	230/460	1.6	Yes	1
	1800	D80D	**EMVM3546D**	1,401	BIM	11.61	38	85.5	230/460	1.5	Yes	1, 30
1.1/1.5	3600	D80D	**EMVM3550D**	1,421	BIM	11.61	38	84	230/460	1.9	Yes	1, 30
	1800	D90SD	**EMVM3554D**	1,421	BIM	12.99	41	86.5	230/460	2.2	Yes	1, 30
1.5/2	3600	D90LD	**EMVM3555D**	1,540	BIM	12.99	41	85.5	208-230/460	2.5	Yes	1, 30
	1800	D90LD	**EMVM3558D**	1,498	BIM	12.99	45	86.5	230/460	2.9	Yes	1, 30
2.2/3	3600	D90LD	**EMVM3559D**	1,668	BIM	13.87	50	86.5	230/460	3.6	Yes	1, 30
	1800	D100D	**EMVM3611D**	1,790	BIM	15.55	89	89.5	230/460	4.2	Yes	1, 30
3.7/5	3600	D100LD	**EMVM3613D**	2,183	BIM	13.41	81	88.5	230/460	5.6	Yes	1, 30
	1800	D112MD	**EMVM3615D**	2,042	BIM	14.91	93	89.5	230/460	6.7	Yes	1, 30
5.5/7.5	3600	D132SD	**EMVM3709D**	2,987	BIM	20.47	96	89.5	230/460	8.3	Yes	1, 30
	1800	D132SD	**EMVM3710D**	2,765	BIM	17.33	151	91.7	230/460	9.5	Yes	1, 30
7.5/10	3600	D132SD	**EMVM3711D**	3,623	BIM	16.20	118	90.2	230/460	11.8	Yes	1, 30
	1800	D132MD	**EMVM3714D**	3,395	BIM	18.82	165	91.7	230/460	12	Yes	1, 30

(a) See notes on inside back flap.

Metric IEC, three phase, 60 Hz, TEFC, B14 face

0.25 thru 3.7 kW (.33 thru 5 Hp)

IP54

Features:

- IEC-B14 face mounting
- Ball bearings with locked DE bearing
- Heavy gauge steel frames
- Gasketed conduit box

Applications:

- Pumps
- Fans
- Conveyors
- Machine tools
- Gear reducers

kW/Hp	RPM	IEC Frame	Catalog Number	List Price	Disc. Sym.	"L" Dim. (in)	Aprx. Wt. (lb)	Full Load Efficiency	60 Hz Voltage	Full Load Amps	60 Hz Use in US	Notes (a)
.25/.33	1800	D71C	**MVM3458C**	837	BIM	10.74	22	74	230/460	0.7	Yes	30
.37/.50	3600	D71C	**MVM3460C**	891	BIM	10.74	22	72	230/460	0.6	Yes	30
	1800	D71C	**MVM3461C**	940	BIM	10.74	22	71	208-230/460	1.2	Yes	2, 30
.55/.75	3600	D71C	**MVM3463C**	927	BIM	11.24	26	75.5	230/460	1.4	Yes	30
	1800	D80C	**MVM3542C**	986	BIM	11.11	26	75.5	208-230/460	1.5	Yes	30
.75/1	1800	D80C	**EMVM3546C**	1,375	BIM	11.38	38	85.5	230/460	1.5	Yes	1,30
1.5/2	1800	D90LC	**EMVM3558C**	1,466	BIM	13.75	45	86.5	230/460	2.9	Yes	1,30
2.2/3	3600	D90LC	**EMVM3559C**	1,637	BIM	14.63	50	86.5	230/460	3.6	Yes	1,30
	1800	D100C	**EMVM3611C**	1,762	BIM	15.88	70	89.5	230/460	4.2	Yes	1,30
3.7/5	3600	D100LC	**EMVM3613C**	2,157	BIM	15.88	81	88.5	230/460	5.6	Yes	1,30
	1800	D112MC	**EMVM3615C**	2,011	BIM	17.39	93	89.5	230/460	6.7	Yes	1,30

(a) See notes on inside back flap.

Single phase, NEMA frame, TEFC and ODP, foot mounted

1/3 thru 5 Hp

TEFC IP44* | ODP IP22

Features:

- CE certified
- Low noise design
- Vibration dampening base
- Ingress protected conduit box
- Robust capacitor cover
- Dynamically balanced rotor
- High performance ball bearings

Applications:

- Fans
- Pumps
- Blowers
- Conveyors
- Compressors
- Industrial machines
- Other 50 Hz general purpose applications

Hp	RPM 50 Hz.	NEMA Frame	Catalog Number	List Price	Disc. Sym.	"C" Dim.	Aprx. Wt. (lb)	Full Load Efficiency	Voltage	Full Load Amps	Notes (a)
Totally enclosed fan cooled, IP44											
1/3	1500	56	**L3501-50**	741	5E1	11.34	25	59	110/220	3.2	1
1/2	3000	56	**L3503-50**	725	5E1	11.35	27	68	110/220	3.3	
	1500	48	**L3409-50**	843	5E1	12.22	31	62	110/220	3.6	
		56	**L3504-50**	843	5E1	12.84	32	62	110/220	3.6	
3/4	3000	56	**L3506-50**	809	5E1	12.23	35	62	110/220	4.6	
	1500	56	**L3507-50**	1,001	5E1	13.25	38	66	110/220	5	
1	3000	56	**L3509-50**	940	5E1	13.23	40	68	110/220	6.3	
	1500	56	**L3510-50**	1,151	5E1	14.12	47	68	110/220	6.2	
1 1/2	3000	56	**L3513-50**	1,238	5E1	14.11	48	68	110/220	9	1
	1500	56	**L3514-50**	1,301	5E1	14.13	46	73	110/220	8	
		145T	**L3514T-50**	1,301	5E1	14.18	51	73	110/220	8	
2	3000	56	**L3515-50**	1,610	5E1	14.11	53	77	110/220	9.7	1
	1500	182T	**L3605T-50**	1,839	5E1	16.56	76	81	110/220	10	
3	1500	184T	**L3609T-50**	2,165	5E1	18.06	95	84.5	110/220	12.5	2
5	1500	213T	**L3708T-50**	2,589	5E1	17.89	119	84	220	22	2
Open drip proof, IP22											
1/3	3000	48	**L1205-50**	548	501	9.13	22	64.9	110/220	2.6	
	1500	48	**L1206-50**	667	501	9.38	24	62	110/220	2.3	
1/2	3000	48	**L1208-50**	603	501	9.75	25	68	110/220	3.3	
	1500	48	**L1209-50**	837	501	10.63	28	62	110/220	3.7	
		56	**L1304-50**	759	501	11.01	29	62	110/220	3.7	
3/4	3000	56	**L1306-50**	734	501	11.01	28	64	110/220	5.3	
	1500	56	**L1307-50**	937	501	12.07	38	66	110/220	5	
1	3000	56	**L1309-50**	772	501	11.51	34	66	110/220	6	
	1500	56	**L1318-50**	1,143	501	12.07	41	68	110/220	6.5	2
1 1/2	3000	56	**L1313-50**	1,084	501	12.07	43	68	110/220	9.2	
	1500	56	**L1319-50**	1,317	501	12.07	41	68	110/220	11.5	2
2	3000	56	**L1317-50**	1,444	501	12.94	47	70	110/220	12	2
	1500	182T	**L1405T-50**	1,531	501	15.00	66	69	110/220	14	2
3	1500	184T	**L1408T-50**	1,655	501	16.50	91	75.5	110/220	16	
5	1500	213T	**L1508T-50**	2,589	501	16.32	112	82.5	220	21.6	2

(a) See notes on inside back flap.

All motors listed above are specifically designed for operation with 50 Hz. power.

*IP54 when Drain Fitting Kit #HA5027A03 is installed in the weep holes (48 thru 256T frame motors only)

Three phase, NEMA frame, TEFC and ODP, foot mounted

1/2 thru 60 Hp

TEFC IP44* **ODP IP22**

Features:

- CE certified
- Vibration dampening base
- Cast iron or heavy gauge steel design
- Suitable for mounting in any configuration**
- Super-E® motors have IE3 efficiency
- Compliant to EU efficiency regulations
- 3 year warranty on Super-E motors

Applications:

- Fans
- Pumps
- Blowers
- Conveyors
- Compressors
- Industrial machines
- Other 50 Hz general purpose applications

Hp	RPM 50 Hz.	NEMA Frame	Catalog Number	List Price	Disc. Sym.	"C" Dim.	Aprx. Wt. (lb)	Full Load Efficiency	Voltage	Full Load Amps	Notes (a)
Totally enclosed fan cooled, IP44											
1/2	1500	56	**M3538-57**	734	5E3	11.35	26	73	230/400	1	
3/4	3000	56	**M3541-57**	734	5E3	11.35	25	75.5	230/400	1.4	
	1500	56	**M3542-57**	785	5E3	12.85	32	75.5	230/400	1.8	
1	3000	56	**EM3545-57**	1,029	5E3	12.22	35	82.5	230/400	1.6	12
	1500	143T	**EM3546T-57**	1,052	5E3	12.31	34	82.5	230/400	1.8	1
1 1/2	3000	143T	**EM3550T-57**	1,194	5E3	13.29	43	85.5	230/400	2.3	
	1500	145T	**EM3554T-57**	1,070	5E3	13.31	41	84.1	230/400	2.9	1
2	3000	145T	**EM3555T-57**	1,311	5E3	14.17	50	84.2	230/400	2.9	
	1500	145T	**EM3558T-57**	1,130	5E3	13.31	45	85.3	230/400	3.4	1
3	3000	182T	**EM3610T-57**	1,671	5E3	15.16	55	85.9	230/400	4.2	1
	1500	182T	**EM3611T-57**	1,326	5E3	16.54	70	86.7	230/400	5.6	1
5	3000	184T	**EM3613T-57**	1,922	5E3	18.04	93	88.1	230/400	6.4	
	1500	184T	**EM3615T-57**	1,531	5E3	18.04	101	88.4	230/400	8	1
7 1/2	3000	213T	**EM3709T-58**	2,666	5E3	17.89	121	89.2	400	10.4	1
	1500	213T	**EM3710T-58**	2,124	5E3	19.01	127	89.6	400	10.8	1
10	3000	215T	**EM3711T-58**	2,827	5E3	19.01	140	90	400	13	1
	1500	215T	**EM3714T-58**	2,687	5E3	20.51	165	90	400	14	1
15	1500	254T	**EM2333T-58**	4,140	5E3	23.35	291	91	400	21	1
20	1500	256T	**EM2334T-58**	5,019	5E3	23.35	304	92	400	28	
25	1500	284T	**EM4103T-58**	6,565	5E3	27.76	437	93	400	37	
30	1500	286T	**EM4104T-58**	7,787	5E3	27.76	475	93	400	42	1
40	1500	324T	**EM4110T-58**	10,183	5E3	30.28	650	94	400	52	1
50	1500	326T	**EM4115T-58**	11,127	5E3	30.28	800	94	400	64	1
60	1500	364T	**EM4314T-58**	16,009	5E3	33.44	910	94	400	81	1
Open drip proof, IP22											
1/2	1500	56	**M3108-57**	647	503	10.12	26	73	230/400	1	
3/4	1500	56	**M3112-57**	720	503	10.12	26	70	230/400	1.9	
1	1500	56	**EM3116-57**	937	503	11.07	34	82.5	230/400	1.8	1
		143T	**EM3116T-57**	942	503	11.12	34	82.5	230/400	1.8	1
1 1/2	1500	145T	**EM3154T-57**	1,001	503	12.13	41	84.1	230/400	2.9	1
2	1500	145T	**EM3157T-57**	1,029	503	12.13	45	85.3	230/400	3.4	1
3	1500	182T	**EM3211T-57**	1,177	503	15.00	74	86.7	230/400	4.8	1
5	1500	184T	**EM3218T-57**	1,303	503	16.50	101	88.4	230/400	8	1
7 1/2	1500	213T	**EM3311T-58**	1,841	503	17.45	127	89.6	400	10.8	1
10	1500	215T	**EM3313T-58**	3,002	503	18.95	165	90	400	14	1
15	1500	254T	**EM2513T-58**	4,250	503	21.69	230	91	400	22	1
20	1500	256T	**EM2515T-58**	4,662	503	23.19	275	92	400	28	1

(a) See notes on inside back flap.

Cast iron frame

All motors listed above are specifically designed for operation with 50 Hz. power.

Motors shown in this catalog are suitable for use on 400 volt or 415 volt 50 Hz. power supplies.

*IP54 when Drain Fitting Kit #HA5027A03 is installed in the weep holes (48 thru 256T frame motors only)

**ODP motors retain IP rating when mounted in horizontal position only.

Single and three phase, NEMA frame, TEFC, C-Face

1/4 thru 2 Hp

IP44*

Features:

- CE certified
- Locked DE bearing
- Dynamically balanced rotor
- High performance ball bearings
- Super-E® motors have IE3 efficiency
- Compliant to EU efficiency regulations
- 3 year warranty on Super-E motors

Applications:

- Fans
- Pumps
- Blowers
- Conveyors
- Compressors
- Industrial machines
- Other 50 Hz general purpose applications

Hp	RPM 50 Hz.	NEMA Frame	Catalog Number	List Price	Disc. Sym.	"C" Dim.	Aprx. Wt. (lb)	Full Load Efficiency	Voltage	Full Load Amps	Notes (a)
Single phase											
1/3	1500	56C	**VL3501-50**	813	5E1	11.35	17	59	110/220	3.2	1
1/2	3000	56C	**VL3503-50**	738	5E1	11.35	25	68	110/220	3.3	
	1500	56C	**VL3504-50**	942	5E1	12.85	31	62	110/220	3.6	
3/4	3000	56C	**VL3506-50**	850	5E1	12.25	35	62	110/220	4.6	
	1500	56C	**VL3507-50**	1,116	5E1	13.25	39	66	110/220	5	
1	3000	56C	**VL3509-50**	1,000	5E1	13.25	40	68	110/220	6.3	
	1500	56C	**VL3510-50**	1,278	5E1	14.12	47	68	110/220	6.2	
1 1/2	3000	56C	**VL3513-50**	1,286	5E1	14.12	48	68	110/220	9	1
	1500	56C	**VL3514-50**	1,444	5E1	14.12	51	73	110/220	8	
2	3000	56C	**VL3515-50**	1,632	5E1	14.12	52	77	110/220	9.7	1
Three phase											
1/4	1500	56C	**KM3454-57**	594	5E3	11.35	20	64	230/400	0.7	
1/3	1500	56C	**VM3534-57**	672	5E3	11.35	21	68	230/400	1	
1/2	3000	56C	**VM3537-57**	729	5E3	11.35	22	72	230/400	1.1	
	1500	56C	**VM3538-57**	785	5E3	11.35	25	73	230/400	1	
3/4	3000	56C	**VM3541-57**	761	5E3	11.35	26	75.5	230/400	1.4	
	1500	56C	**VM3542-57**	843	5E3	12.85	32	75.5	230/400	1.8	
1	3000	56C	**VEM3545-57**	1,039	5E3	12.23	35	82.5	230/400	1.6	12
	1500	56C	**VEM3546-57**	1,029	5E3	12.23	34	82.5	230/400	1.8	1
		143TC	**VEM3546T-57**	1,029	5E3	12.29	34	82.5	230/400	1.8	1
1 1/2	3000	143TC	**VEM3550T-57**	1,130	5E3	13.29	43	85.5	230/400	2.3	
	1500	145TC	**VEM3554T-57**	1,069	5E3	13.29	41	84.1	230/400	2.9	1
2	3000	56C	**VEM3555-57**	1,121	5E3	14.10	50	84.2	230/400	2.9	
		143TC	**VEM3555T-57**	1,233	5E3	14.17	50	84.2	230/400	2.9	
	1500	145TC	**VEM3558T-57**	1,133	5E3	13.29	45	85.3	230/400	3.4	1

(a) See notes on inside back flap.

All motors listed above are specifically designed for operation with 50 Hz. power.

Motors shown in this catalog are suitable for use on 400 volt or 415 volt 50 Hz. power supplies.

*IP54 when Drain Fitting Kit #HA5027A03 is installed in the weep holes (48 thru 256T frame motors only)

Variable Speed AC motors

Baldor-Reliance® variable speed motors are specifically designed for variable speed control. The platform provides constant torque across the entire operating speed range in traditional NEMA and IEC designs or a power dense laminated steel square frame. Controlling a motor with variable frequency power has never been easier when using a Baldor-Reliance variable speed motor.

Designed specifically for adjustable frequency power operation and full compliance with MG-1 Part 31.

1/3 - 1750 Horsepower

Product line – DPG-FV, TEBC, TEFC, TENV enclosures	**EC Titanium™**	**RPM AC**	**RPM AC PM**	**Inverter Duty V*S Master**
Frame sizes	140, 180, 210	FL/Rl180 - FL5800/RL5000	FL/RL180 - RL440/FL5800	56C - 449T
Electrical features				
Designed for adjustable frequency power and complies with MG1 – Part 31 for corona free operation	S	S	S	S
Constant torque performance down to zero speed 1000:1	–	S	S	S
Provisions for encoder mounting	–	S	S	S
Vector Duty – stocked with encoder mounted	–	S	S	S
Class H insulation	–	S	S	–
Class F insulation	S	–	–	S
Class F insulation, Class B Temperature Rise	S	–	–	–
PM synchronous rotor technology for improved efficiency and increased power density	S	–	S	–
Low rotor inertia for high dynamic performance	–	S	S	–
Suitable for across the line operation	–	–	(1)	(1)
Internal Shaft Grounding Brush for common mode voltage free operation	S	–	–	–
Winding thermal protection with quantity 3 N/C thermostats, one per phase	–	S	S	S
F rise or better for longer motor life	–	–	S	S
Mechanical features				
Laminated steel frame RL/FL 210 - 440	–	S	S	–
Cast iron frame 180 - 440	–	–	–	S
Rolled Steel frame 140 - 210	S	–	–	–
Power dense designs – fits where other motors can't	S	S	S	–
Standard NEMA mounting for ease interchangability	S	–	–	S
DPG-FV enclosure	–	S	S	–
TEBC enclosure	–	S	S	S
TEFC enclosure	S	S	S	S
TENV enclosure	–	S	S	S

S = Standard
(1) Some models

Variable Speed AC motors – Speed range capabilities
EC Titanium™, V*S Master and RPMAC motors

EC Titanium™, V*S Master and RPMAC motors exceed all requirements of NEMA MG-1 Parts 30 and 31 for AC induction motors powered from adjustable speed inverter control. Satisfactory motor performance depends on proper drive setup.

Super-E® motors: Super-E motors are inverter-ready and meet NEMA MG 1 Part 31.4.4.2. Super-E motors are suitable for use with inverter drives. Motor inverter setup is unique to each specific application. Proper setup and wiring procedures must be closely followed.

Application considerations: It is necessary that motor-drive applications are commissioned by persons familiar with the operation and setup of adjustable speed drives, applicable electrical codes and any other regulations.

Each drive must be tuned to the motor for the specific application. System operating parameters must be checked, including voltage at motor power leads, to insure that motor/drive setup has been successfully completed.

Applications that are not properly setup can lead to substandard performance and failure of system components. In some installations, shaft grounding and isolated bearings may prevent bearing fluting and are available as an option or through Mod Express®.

Reference the chart below for constant torque and variable torque capabilities for each product family. Torque performance depends upon proper drive setup.

Motors 48 body style and smaller are suitable for maximum 230V inverter operation.

Efficiency savings: Significant energy savings can be achieved when applying inverter-ready motors such as the Baldor-Reliance® Super-E to centrifugal load applications (fan and centrifugal pump) and running at reduced speed taking advantage of the affinity laws where motor load and corresponding energy consumption is reduced by the cube of the speed.

Family	Enclosure	Frame Size	Constant Torque	(4) Variable Torque	Comments
EC Titanium motor 230/460 and 460					
Motor Only (TEFC)	TEFC	140, 180, 210	20:1	20:1	EC Titanium Motor
EC Titanium Integrated drive and motor 115, 230 and 460					
IMD (TOP / AXIAL)	TEFC	140, 180, 210	10:1	10:1	EC Titanium Integrated Motor & Drive
Super-E® motors 230, 460 and 575 volts (2)					
EM	TEFC	56-320 (1)	10:1	20:1	General purpose premium efficient
		360-400	4:1	20:1	
		444-449	2:1	20:1	
EM	ODP	56-210 (1)	10:1	20:1	General purpose premium efficient
		250-320	5:1	20:1	
		360-449	2:1	20:1	
XT, ECP/XEX and ECP8/841XL	TEFC	**Please refer to the end of the Severe duty section**			Severe duty premium efficient
EWDM/Paint Free	TENV, TEFC	56-256 (1)	20:1	20:1	Washdown duty premium efficient
FS/ESS	TEFC	56-250	2:1	10:1	Stainless steel washdown duty
	TENV	56-140	4:1	20:1	
XM/CPX/DRX	XPFC	**Please refer to the end of the Severe duty section**			Explosion Proof
V*S Master motors 230, 460 and 575 volts					
IDCSWDM	TENV	56-140	5:1	10:1	Inverter Duty, paint free
IDCSWDM	TEFC	56-215	3:1	10:1	Inverter Duty, paint free
IDM	TEBC	143-5009	1000:1	1000:1	Inverter Duty, blower cooled
IDNM	TENV	143-256	1000:1	1000:1	Inverter Duty, totally enclosed non-ventilated
ZDM	TEBC	143-5009	1000:1	1000:1	Vector Duty, blower cooled
ZDNM	TENV	143-256	1000:1	1000:1	Vector Duty, non-ventilated
IDWNM	TENV	143-254	1000:1	1000:1	Inverter Duty, washdown, non-ventilated
ZDWNM	TENV	143-254	1000:1	1000:1	Vector Duty, washdown, non-ventilated
IDNVSM	TENV	56-256	1000:1	1000:1	Inverter Duty, TENV, V*S Master
IDVSM	TEFC	182-449	1000:1	1000:1	Inverter Duty, TEFC, V*S Master
ZDNVSM	TENV	56-256	1000:1	1000:1	Vector Duty, TENV, V*S Master
ZDVSM	TEFC	182-449	1000:1	1000:1	Vector Duty, TEFC, V*S Master
ZDVSCP	TEFC-XT	143-326	1000:1	1000:1	Vector Duty, TEFC-XT, V*S Master
RPMAC motors 230 & 460					
IDNRPM	TENV	FL180-FL210	1000:1	1000:1	Inverter Duty, TENV, RPMAC
IDxRPM	TEFC, TEBC, DPG-FV	FL180-FL440	1000:1	1000:1	Inverter Duty, TEFC, TEBC, DPG-FV, RPMAC
IDCRPM	TEFC	FL180-FL280	1000:1 (3)	1000:1	Inverter Duty, TEFC, caged-IPM, RPMAC
ZDNRPM	TENV	FL180-FL210	1000:1	1000:1	Vector Duty, TENV, RPMAC
ZDxRPM	TEFC, TEBC	FL180-L400	1000:1	1000:1	Vector Duty, TEFC & TEBC, RPMAC
ZDPM	TEBC	FL180-FL440	1000:1	1000:1	Vector Duty, TEBC, PM, RPMAC

Notes: (1) Baldor-Reliance type 35M frames and larger
(2) For greater speed range capabilities, please select an Inverter Duty, Vector Duty, V*S Master or RPM AC type motor, or contact your local sales office for a custom motor design.
(3) Except for IDCRPM281254 which is 4:1
(4) Speed ranges may vary by model. Contact your sales representative to ensure the motor needed will meet the turndown requirements.

NEW!

EC Titanium™ motor, Inverter Duty, three phase, totally enclosed

1 to 20 Hp

BALDOR · RELIANCE
SHAFT GROUNDING BRUSH
INSTALLED
LB1508

IP54

Features:

- IE5+ Motor Efficiency
- FASR - Ferrite Assisted Synchronous Reluctance Rotor
- Class F Insulation with Class B Motor temperature rise
- IP54 Motor Enclosure with shaft seal
- Internal grounding brush for bearing current mitigation on DE retainer ring
- For inverter use only per NEMA MG1 Part 31.4.4.2
- 1.5 Service Factor Design
- Designed for longevity with 3 year warranty

Applications:

- Fans
- Pumps
- Blowers
- Unit Handling
- HVAC Systems
- Variable Speed Applications
- General Purpose Applications
- Compressors

Hp	Base Speed RPM	C.H. Speed RPM	NEMA Frame	Enclosure	Catalog Number (b)	List Price	Disc. Sym.	"C" Dim.	Aprx. Wt. (lb)	Full Load Eff.	Voltage	Full Load Amps	Notes (a)
EC Titanium Motor, Inverter Duty, three phase, totally enclosed													
1	1800	4000	143T	TEFC	**ECS101M0H1DF4**	1,535	EC1	12.29	28	89.3%	230/460	2.3/1.2	1, 37
2	1800	4000	145T	TEFC	**ECS101M0H2DF4**	1,684	EC1	12.29	35	90.7%	230/460	4.5/2.3	1, 37
3	1800	4000	145T	TEFC	**ECS101M0H3DF4**	1,765	EC1	13.29	44	91.4%	230/460	7.0/3.5	1, 37
3	1800	4000	182T	TEFC	**ECS101M0H3EF4**	1,846	EC1	16.54	59	92.8%	230/460	7.3/3.7	1
5	1800	4000	145T	TEFC	**ECS101M0H5DF4**	1,919	EC1	15.54	64	93.0%	230/460	10.4/5.2	1, 37
5	1800	4000	184T	TEFC	**ECS101M0H5EF4**	1,990	EC1	16.54	68	93.7%	230/460	10.5/5.3	1
7 1/2	1800	4000	184T	TEFC	**ECS101M0H7EF4**	2,396	EC1	18.04	92	94.0%	230/460	17.5/8.8	1
7 1/2	1800	3000	213T	TEFC	**ECS101M0H7FF4**	2,802	EC1	17.89	105	94.0%	230/460	17.4/8.7	1
10	1800	3000	213T	TEFC	**ECS101M0H10FF4**	3,314	EC1	19.02	123	94.8%	230/460	22.0/11.0	1
15	1800	3000	215T	TEFC	**ECS101M0H15FF4**	4,602	EC1	21.96	168	95.6%	230/460	34.8/17.4	1
20	1800	3000	215T	TEFC	**ECS101M4H20FF4**	5,005	EC1	23.51	218	95.9%	460	21.6	1, 82
EC Titanium Motor, Inverter Duty, three phase, totally enclosed, C-Face, foot mounted													
1	1800	4000	143TC	TEFC	**ECS101M0H1DB4**	1,577	EC1	12.29	28	89.3%	230/460	2.3/1.2	1, 37
2	1800	4000	143TC	TEFC	**ECS101M0H2DB4**	1,725	EC1	12.29	35	90.7%	230/460	4.5/2.3	1, 37
3	1800	4000	145TC	TEFC	**ECS101M0H3DB4**	1,807	EC1	13.29	44	91.4%	230/460	7.0/3.5	1, 37
3	1800	4000	182TC	TEFC	**ECS101M0H3EB4**	1,887	EC1	16.54	59	92.8%	230/460	7.3/3.7	1
5	1800	4000	143TC	TEFC	**ECS101M0H5DB4**	1,960	EC1	15.54	64	93.0%	230/460	10.4/5.2	1, 37
5	1800	4000	182TC	TEFC	**ECS101M0H5EB4**	2,032	EC1	16.54	68	93.7%	230/460	10.5/5.3	1
7 1/2	1800	4000	184TC	TEFC	**ECS101M0H7EB4**	2,438	EC1	18.04	92	94.0%	230/460	17.5/8.8	1
7 1/2	1800	3000	213TC	TEFC	**ECS101M0H7FB4**	2,844	EC1	17.89	105	94.0%	230/460	17.4/8.7	1
10	1800	3000	213TC	TEFC	**ECS101M0H10FB4**	3,355	EC1	19.02	123	94.8%	230/460	22.0/11.0	1
15	1800	3000	215TC	TEFC	**ECS101M0H15FB4**	4,643	EC1	21.96	168	95.6%	230/460	34.8/17.4	1
20	1800	3000	215TC	TEFC	**ECS101M4H20FB4**	5,047	EC1	23.51	218	95.9%	460	21.6	1, 82
EC Titanium Motor, Inverter Duty, three phase, totally enclosed, C-Face, footless													
1	1800	4000	143TC	TEFC	**ECS101M0H1DC4**	1,577	EC1	12.29	28	89.3%	230/460	2.3/1.2	1, 37
2	1800	4000	143TC	TEFC	**ECS101M0H2DC4**	1,725	EC1	12.29	35	90.7%	230/460	4.5/2.3	1, 37
3	1800	4000	145TC	TEFC	**ECS101M0H3DC4**	1,807	EC1	13.29	44	91.4%	230/460	7.0/3.5	1, 37
3	1800	4000	182TC	TEFC	**ECS101M0H3EC4**	1,887	EC1	16.54	59	92.8%	230/460	7.3/3.7	1
5	1800	4000	143TC	TEFC	**ECS101M0H5DC4**	1,960	EC1	15.54	64	93.0%	230/460	10.4/5.2	1, 37
5	1800	4000	182TC	TEFC	**ECS101M0H5EC4**	2,032	EC1	16.54	68	93.7%	230/460	10.5/5.3	1
7 1/2	1800	4000	184TC	TEFC	**ECS101M0H7EC4**	2,438	EC1	18.04	92	94.0%	230/460	17.5/8.8	1
7 1/2	1800	3000	213TC	TEFC	**ECS101M0H7FC4**	2,844	EC1	17.89	105	94.0%	230/460	17.4/8.7	1
10	1800	3000	213TC	TEFC	**ECS101M0H10FC4**	3,355	EC1	19.02	123	94.8%	230/460	22.0/11.0	1
15	1800	3000	215TC	TEFC	**ECS101M0H15FC4**	4,643	EC1	21.96	168	95.6%	230/460	34.8/17.4	1
20	1800	3000	215TC	TEFC	**ECS101M4H20FC4**	5,047	EC1	23.51	218	95.9%	460	21.6	1, 82

(a) See notes on inside back flap.
(b) FASR – Ferrite Assisted Permanent Magnet, Syncronous Reluctance Rotor
Red catalog number indicates **NEW** product.
For EC Titanium Mod Express®, contact your local sales office.

NEW!

NEW!

EC Titanium™, Top Mount Integrated Drive Motor, three phase, totally enclosed

1 to 10 Hp

BALDOR · RELIANCE II
SHAFT GROUNDING BRUSH
INSTALLED
LB1508

IP54

Features:

- Permanenant Magnet PWM AC Drive Control
- IP54 Gasket Plastic Cover Enclosure
- Built-in ABB Ability and Bluetooth communications
- Serial Modbus RJ45 Interface
- 2 Digital Inputs, 2 Configurable Inputs (Analog or Digital)
- 1 Relay Ouput
- IE5+ Motor Efficiency
- Class F Insulation with Class B Motor temperature
- Internal grounding brush for bearing current mitigation
- Motor rated for inverter use per NEMA MG1 Part 31.4.4.2

Applications:

- Fans
- Pumps
- Blowers
- Unit Handling
- HVAC Systems
- Variable Speed Applications
- General Purpose Applications
- Compressors

Hp	Base Speed RPM	C.H. Speed RPM	NEMA Frame	Enclosure	Catalog Number	List Price	Disc. Sym.	"C" Dim.	Aprx. Wt. (lb)	Full Load Eff.	Voltage	Motor Input Amps	Drive Module (b)	Drive Output Amps	Notes (a)
EC Titanium, Top Mount Integrated Drive Motor, three phase, totally enclosed															
1-phase 100V...115V AC (+/-10%) – 3 Phase 230V Output															
1	1800	4000	143T	TEFC	**ECS100T1H1DF4**	2,566	EC2	12.37	35	89.3%	115	2.4	ECI1A3P2	3.2	2, 37, 68
1-phase 200...240V AC (+/-10%) – 3 Phase 230V Output															
1	1800	4000	143T	TEFC	**ECS100T8H1DF4**	2,566	EC2	12.37	35	89.3%	230	2.4	ECI8A7P0	7.0	2, 37, 68
2	1800	4000	145T	TEFC	**ECS100T8H2DF4**	2,981	EC2	12.37	41	90.7%	230	4.4	ECI8A7P0	7.0	2, 37, 68
3-phase 200...240V AC (+/-10%) – 3 Phase 230V Output															
1	1800	4000	143T	TEFC	**ECS100T2H1DF4**	2,566	EC2	12.37	35	89.3%	230	2.4	ECI2A4P3	4.3	2, 37, 68
2	1800	4000	145T	TEFC	**ECS100T2H2DF4**	2,981	EC2	12.37	41	90.7%	230	4.3	ECI2A7P0	7.0	2, 37, 68
3	1800	4000	182T	TEFC	**ECS100T2H3EF4**	3,372	EC2	16.71	66	92.8%	230	7.3	ECI2A10P5	10.5	2, 68
5	1800	4000	184T	TEFC	**ECS100T2H5EF4**	3,570	EC2	16.71	77	93.7%	230	10.5	ECI2A10P5	10.5	2, 68
3-phase 380...480V AC (+/-10%) – 3 Phase 460V Output															
1	1800	4000	143T	TEFC	**ECS100T4H1DF4**	2,566	EC2	12.37	35	89.3%	460	1.2	ECI4A2P2	2.2	2, 37, 68
2	1800	4000	145T	TEFC	**ECS100T4H2DF4**	2,801	EC2	12.37	41	90.7%	460	2.2	ECI4A2P2	2.2	2, 37, 68
3	1800	4000	145T	TEFC	**ECS100T4H3DF4**	3,352	EC2	13.37	47	91.4%	460	3.5	ECI4A4P1	4.1	2, 37, 68
3	1800	4000	182T	TEFC	**ECS100T4H3EF4**	3,372	EC2	16.71	66	92.8%	460	3.7	ECI4A4P1	4.1	2, 68
5	1800	4000	184T	TEFC	**ECS100T4H5EF4**	3,570	EC2	16.71	77	93.7%	460	5.3	ECI4A5P8	5.8	2, 68
7 1/2	1800	4000	184T	TEFC	**ECS100T4H7EF4**	4,444	EC2	18.21	106	94.0%	460	8.8	ECI4A9P5	9.5	2, 68
7 1/2	1800	3000	213T	TEFC	**ECS100T4H7FF4**	4,771	EC2	18.10	111	94.7%	460	8.6	ECI4A9P5	9.5	2, 68
10	1800	3000	215T	TEFC	**ECS100T4H10FF4**	5,621	EC2	19.23	132	94.8%	460	11.0	ECI4A12P0	12.0	2, 68
EC Titanium, Top Mount Integrated Drive Motor, three phase, totally enclosed, C-Face, foot mounted															
1-phase 100V...115V AC (+/-10%) – 3 Phase 230V Output															
1	1800	4000	143TC	TEFC	**ECS100T1H1DB4**	2,607	EC2	12.37	36	89.3%	115	2.4	ECI1A3P2	3.2	2, 37, 68
1-phase 200...240V AC (+/-10%) – 3 Phase 230V Output															
1	1800	4000	143TC	TEFC	**ECS100T8H1DB4**	2,607	EC2	12.37	35	89.3%	230	2.4	ECI8A7P0	7	2, 37, 68
2	1800	4000	145TC	TEFC	**ECS100T8H2DB4**	3,022	EC2	13.37	41	90.7%	230	4.4	ECI8A7P0	7	2, 37, 68
3-phase 200...240V AC (+/-10%) – 3 Phase 230V Output															
1	1800	4000	143TC	TEFC	**ECS100T2H1DB4**	2,607	EC2	12.37	35	89.3%	230	2.4	ECI2A4P3	4.3	2, 37, 68
2	1800	4000	145TC	TEFC	**ECS100T2H2DB4**	3,022	EC2	13.37	41	90.7%	230	4.3	ECI2A7P0	7	2, 37, 68
3	1800	4000	182TC	TEFC	**ECS100T2H3EB4**	3,413	EC2	16.71	66	92.8%	230	7.3	ECI2A10P5	10.5	2, 68
5	1800	4000	184TC	TEFC	**ECS100T2H5EB4**	3,611	EC2	16.71	77	93.7%	230	10.5	ECI2A10P5	10.5	2, 68
3-phase 380...480V AC (+/-10%) – 3 Phase 460V Output															
1	1800	4000	143TC	TEFC	**ECS100T4H1DB4**	2,607	EC2	12.37	35	89.3%	460	1.2	ECI4A2P2	2.2	2, 37, 68
2	1800	4000	145TC	TEFC	**ECS100T4H2DB4**	2,842	EC2	13.37	41	90.7%	460	2.2	ECI4A2P2	2.2	2, 37, 68
3	1800	4000	145TC	TEFC	**ECS100T4H3DB4**	3,394	EC2	13.37	47	91.4%	460	3.5	ECI4A4P1	4.1	2, 37, 68
3	1800	4000	182TC	TEFC	**ECS100T4H3EB4**	3,413	EC2	16.71	67	92.8%	460	3.7	ECI4A4P1	4.1	2, 68
5	1800	4000	184TC	TEFC	**ECS100T4H5EB4**	3,611	EC2	16.71	77	93.7%	460	5.3	ECI4A5P8	5.8	2, 68
7 1/2	1800	4000	184TC	TEFC	**ECS100T4H7EB4**	4,486	EC2	18.21	106	94.0%	460	8.8	ECI4A9P5	9.5	2, 68
7 1/2	1800	3000	213TC	TEFC	**ECS100T4H7FB4**	4,813	EC2	18.1	111	94.7%	460	8.6	ECI4A9P5	9.5	2, 68
10	1800	3000	215TC	TEFC	**ECS100T4H10FB4**	5,662	EC2	19.23	132	94.8%	460	11	ECI4A12P0	12.0	2, 68

(a) See notes on inside back flap. (b) Integrated Drive Model – available as a renewal parts replacement assembly **Red** catalog number indicates **NEW** product.
For EC Titanium Mod Express®, contact your local sales office.

NEW!

NEW!

EC Titanium™, Top Mount Integrated Drive Motor, three phase, totally enclosed

Hp	Base Speed RPM	C.H. Speed RPM	NEMA Frame	Enclosure	Catalog Number	List Price	Disc. Sym.	"C" Dim.	Aprx. Wt. (lb)	Full Load Eff.	Voltage	Motor Input Amps	Drive Module (b)	Drive Output Amps	Notes (a)
EC Titanium, Top Mount Integrated Drive Motor, three phase, totally enclosed, C-Face, footless															
1-phase 100V...115V AC (+/-10%) – 3 Phase 230V Output															
1	1800	4000	143TC	TEFC	**ECS100T1H1DC4**	1,753	EC2	12.37	36	89.3%	115	2.4	ECI1A3P2	3.2	2, 37, 68
1-phase 200...240V AC (+/-10%) – 3 Phase 230V Output															
1	1800	4000	143TC	TEFC	**ECS100T8H1DC4**	2,607	EC2	12.37	35	89.3%	230	2.4	ECI8A7P0	7	2, 37, 68
2	1800	4000	145TC	TEFC	**ECS100T8H2DC4**	3,022	EC2	13.37	41	90.7%	230	4.4	ECI8A7P0	7	2, 37, 68
3-phase 200...240V AC (+/-10%) – 3 Phase 230V Output															
1	1800	4000	143TC	TEFC	**ECS100T2H1DC4**	2,607	EC2	12.37	35	89.3%	230	2.4	ECI2A4P3	4.3	2, 37, 68
2	1800	4000	145TC	TEFC	**ECS100T2H2DC4**	3,022	EC2	13.37	41	90.7%	230	4.3	ECI2A7P0	7	2, 37, 68
3	1800	4000	182TC	TEFC	**ECS100T2H3EC4**	3,413	EC2	16.71	66	92.8%	230	7.3	ECI2A10P5	10.5	2, 68
5	1800	4000	184TC	TEFC	**ECS100T2H5EC4**	3,611	EC2	16.71	77	93.7%	230	10.5	ECI2A10P5	10.5	2, 68
3-phase 380...480V AC (+/-10%) – 3 Phase 460V Output															
1	1800	4000	143TC	TEFC	**ECS100T4H1DC4**	2,607	EC2	12.37	35	89.3%	460	1.2	ECI4A2P2	2.2	2, 37, 68
2	1800	4000	145TC	TEFC	**ECS100T4H2DC4**	2,842	EC2	13.37	41	90.7%	460	2.2	ECI4A2P2	2.2	2, 37, 68
3	1800	4000	145TC	TEFC	**ECS100T4H3DC4**	3,394	EC2	13.37	47	91.4%	460	3.5	ECI4A4P1	4.1	2, 37, 68
3	1800	4000	182TC	TEFC	**ECS100T4H3EC4**	3,413	EC2	16.71	67	92.8%	460	3.7	ECI4A4P1	4.1	2, 68
5	1800	4000	184TC	TEFC	**ECS100T4H5EC4**	3,611	EC2	16.71	77	93.7%	460	5.3	ECI4A5P8	5.8	2, 68
7 1/2	1800	4000	184TC	TEFC	**ECS100T4H7EC4**	4,486	EC2	18.21	106	94.0%	460	8.8	ECI4A9P5	9.5	2, 68
7 1/2	1800	3000	213TC	TEFC	**ECS100T4H7FC4**	4,813	EC2	18.1	111	94.7%	460	8.6	ECI4A9P5	9.5	2, 68
10	1800	3000	215TC	TEFC	**ECS100T4H10FC4**	5,662	EC2	19.23	132	94.8%	460	11	ECI4A12P0	12	2, 68

(a) See notes on inside back flap.
(b) Integrated Drive Model – available as a renewal parts replacement assembly
Red catalog number indicates **NEW** product.
For EC Titanium Mod Express®, contact your local sales office.

NEW!

NEW!

EC Titanium™, Axial Mount Integrated Drive Motor, three phase, totally enclosed

1 to 7.5 Hp

BALDOR · RELIANCE
SHAFT GROUNDING BRUSH
INSTALLED
LB1508

IP54

Features:

- Permanenant Magnet PWM AC Drive Control
- IP54 Gasket Plastic Cover Enclosure
- Built-in ABB Ability and Bluetooth communications
- Serial Modbus RJ45 Interface
- 2 Digital Inputs, 2 Configurable Inputs (Analog or Digital)
- 1 Relay Ouput
- IE5+ Motor Efficiency
- Class F Insulation with Class B Motor temperature
- Internal grounding brush for bearing current mitigation
- Motor rated for inverter use per NEMA MG1 Part 31.4.4.2

Applications:

- Fans
- Pumps
- Blowers
- Unit Handling
- HVAC Systems
- Variable Speed Applications
- General Purpose Applications
- Compressors

Hp	Base Speed RPM	C.H. Speed RPM	NEMA Frame	Enclosure	Catalog Number	List Price	Disc. Sym.	"C" Dim.	Aprx. Wt. (lb)	Full Load Eff.	Motor Input Amps	Drive Input Voltage	Drive Module (b)	Drive Output Amps	Notes (a)
EC Titanium, Axial Mount Integrated Drive Motor, three phase, totally enclosed															
1-phase 100V...115V AC (+/-10%) – 3 Phase 230V Output															
1	1800	4000	143T	TEFC	**ECS100A1H1DF4**	2,566	EC3	16.71	35	89.3%	2.4	115	ECI1A3P2	3.2	2, 37, 68
1-phase 200...240V AC (+/-10%) – 3 Phase 230V Output															
1	1800	4000	143T	TEFC	**ECS100A8H1DF4**	2,566	EC3	16.71	35	89.3%	2.4	230	ECI8A7P0	7.0	2, 37, 68
2	1800	4000	145T	TEFC	**ECS100A8H2DF4**	2,981	EC3	16.71	38	90.7%	4.4	230	ECI8A7P0	7.0	2, 37, 68
3-phase 200...240V AC (+/-10%) – 3 Phase 230V Output															
1	1800	4000	143T	TEFC	**ECS100A2H1DF4**	2,566	EC3	16.71	35	89.3%	2.4	230	ECI2A4P3	4.3	2, 37, 68
2	1800	4000	145T	TEFC	**ECS100A2H2DF4**	2,981	EC3	16.71	38	90.7%	4.3	230	ECI2A7P0	7.0	2, 37, 68
3	1800	4000	182T	TEFC	**ECS100A2H3EF4**	3,372	EC3	22.25	66	92.8%	7.3	230	ECI2A10P5	10.5	2, 68
5	1800	4000	184T	TEFC	**ECS100A2H5EF4**	3,570	EC3	22.25	76	93.7%	10.5	230	ECI2A10P5	10.5	2, 68
3-phase 380...480V AC (+/-10%) – 3 Phase 460V Output															
1	1800	4000	143T	TEFC	**ECS100A4H1DF4**	2,566	EC3	16.71	35	89.3%	1.2	460	ECI4A2P2	2.2	2, 37, 68
2	1800	4000	145T	TEFC	**ECS100A4H2DF4**	2,801	EC3	16.71	38	90.7%	2.2	460	ECI4A2P2	2.2	2, 37, 68
3	1800	4000	145T	TEFC	**ECS100A4H3DF4**	3,352	EC3	16.71	46	91.4%	3.5	460	ECI4A4P1	4.1	2, 37, 68
3	1800	4000	182T	TEFC	**ECS100A4H3EF4**	3,372	EC3	22.25	66	92.8%	3.7	460	ECI4A4P1	4.1	2, 68
5	1800	4000	182T	TEFC	**ECS100A4H5EF4**	3,570	EC3	22.25	76	93.7%	5.3	460	ECI4A5P8	5.8	2, 68
7 1/2	1800	4000	184T	TEFC	**ECS100A4H7EF4**	4,444	EC3	23.76	101	94.0%	8.8	460	ECI4A9P5	9.5	2, 68
EC Titanium, Axial Mount Integrated Drive Motor, three phase, totally enclosed, C-Face, foot mounted															
1-phase 100V...115V AC (+/-10%) – 3 Phase 230V Output															
1	1800	4000	143TC	TEFC	**ECS100A1H1DB4**	2,607	EC3	16.71	36	89.3%	2.4	115	ECI1A3P2	3.2	2, 37, 68
1-phase 200...240V AC (+/-10%) – 3 Phase 230V Output															
1	1800	4000	143TC	TEFC	**ECS100A8H1DB4**	2,607	EC3	16.71	35	89.3%	2.4	230	ECI8A7P0	7	2, 37, 68
2	1800	4000	145TC	TEFC	**ECS100A8H2DB4**	3,022	EC3	16.71	41	90.7%	4.4	230	ECI8A7P0	7	2, 37, 68
3-phase 200...240V AC (+/-10%) – 3 Phase 230V Output															
1	1800	4000	143TC	TEFC	**ECS100A2H1DB4**	2,607	EC3	16.71	35	89.3%	2.4	230	ECI2A4P3	4.3	2, 37, 68
2	1800	4000	145TC	TEFC	**ECS100A2H2DB4**	3,022	EC3	16.71	41	90.7%	4.3	230	ECI2A7P0	7	2, 37, 68
3	1800	4000	182TC	TEFC	**ECS100A2H3EB4**	3,412	EC3	22.25	66	92.8%	7.3	230	ECI2A10P5	10.5	2, 68
5	1800	4000	184TC	TEFC	**ECS100A2H5EB4**	3,611	EC3	22.25	77	93.7%	10.5	230	ECI2A10P5	10.5	2, 68
3-phase 380...480V AC (+/-10%) – 3 Phase 460V Output															
1	1800	4000	143TC	TEFC	**ECS100A4H1DB4**	2,607	EC3	16.71	35	89.3%	1.2	460	ECI4A2P2	2.2	2, 37, 68
2	1800	4000	145TC	TEFC	**ECS100A4H2DB4**	2,842	EC3	16.71	41	90.7%	2.2	460	ECI4A2P2	2.2	2, 37, 68
3	1800	4000	145TC	TEFC	**ECS100A4H3DB4**	3,394	EC3	16.71	47	91.4%	3.5	460	ECI4A4P1	4.1	2, 37, 68
3	1800	4000	182TC	TEFC	**ECS100A4H3EB4**	3,413	EC3	22.25	67	92.8%	3.7	460	ECI4A4P1	4.1	2, 68
5	1800	4000	184TC	TEFC	**ECS100A4H5EB4**	3,611	EC3	22.25	77	93.7%	5.3	460	ECI4A5P8	5.8	2, 68
7 1/2	1800	4000	184TC	TEFC	**ECS100A4H7EB4**	4,486	EC3	23.76	106	94.0%	8.8	460	ECI4A9P5	9.5	2, 68

(a) See notes on inside back flap.
(b) Integrated Drive Model – available as a renewal parts replacement assembly
Red catalog number indicates **NEW** product.
For EC Titanium Mod Express®, contact your local sales office.

NEW!

NEW!

EC Titanium, Axial Mount Integrated Drive Motor, three phase, totally enclosed

Hp	Base Speed RPM	C.H. Speed RPM	NEMA Frame	Enclosure	Catalog Number	List Price	Disc. Sym.	"C" Dim.	Aprx. Wt. (lb)	Full Load Eff.	Motor Input Amps	Drive Input Voltage	Drive Module (b)	Drive Output Amps	Notes (a)
EC Titanium, Axial Mount Integrated Drive Motor, three phase, totally enclosed, C-Face, footless															
1-phase 100V...115V AC (+/-10%) – 3 Phase 230V Output															
1	1800	4000	143TC	TEFC	**ECS100A1H1DC4**	2,607	EC3	16.71	36	89.3%	2.4	115	ECI1A3P2	3.2	2, 37, 68
1-phase 200...240V AC (+/-10%) – 3 Phase 230V Output															
1	1800	4000	143TC	TEFC	**ECS100A8H1DC4**	2,607	EC3	16.71	35	89.3%	2.4	230	ECI8A7P0	7	2, 37, 68
2	1800	4000	145TC	TEFC	**ECS100A8H2DC4**	3,022	EC3	16.71	41	90.7%	4.4	230	ECI8A7P0	7	2, 37, 68
3-phase 200...240V AC (+/-10%) – 3 Phase 230V Output															
1	1800	4000	143TC	TEFC	**ECS100A2H1DC4**	2,607	EC3	16.71	35	89.3%	2.4	230	ECI2A4P3	4.3	2, 37, 68
2	1800	4000	145TC	TEFC	**ECS100A2H2DC4**	3,022	EC3	16.71	41	90.7%	4.3	230	ECI2A7P0	7	2, 37, 68
3	1800	4000	182TC	TEFC	**ECS100A2H3EC4**	3,412	EC3	22.25	66	92.8%	7.3	230	ECI2A10P5	10.5	2, 68
5	1800	4000	184TC	TEFC	**ECS100A2H5EC4**	3,611	EC3	22.25	77	93.7%	10.5	230	ECI2A10P5	10.5	2, 68
3-phase 380...480V AC (+/-10%) – 3 Phase 460V Output															
1	1800	4000	143TC	TEFC	**ECS100A4H1DC4**	2,607	EC3	16.71	35	89.3%	1.2	460	ECI4A2P2	2.2	2, 37, 68
2	1800	4000	145TC	TEFC	**ECS100A4H2DC4**	2,842	EC3	16.71	41	90.7%	2.2	460	ECI4A2P2	2.2	2, 37, 68
3	1800	4000	145TC	TEFC	**ECS100A4H3DC4**	3,394	EC3	16.71	47	91.4%	3.5	460	ECI4A4P1	4.1	2, 37, 68
3	1800	4000	182TC	TEFC	**ECS100A4H3EC4**	3,413	EC3	22.25	67	92.8%	3.7	460	ECI4A4P1	4.1	2, 68
5	1800	4000	184TC	TEFC	**ECS100A4H5EC4**	3,611	EC3	22.25	77	93.7%	5.3	460	ECI4A5P8	5.8	2, 68
7 1/2	1800	4000	184TC	TEFC	**ECS100A4H7EC4**	4,486	EC3	23.76	106	94.0%	8.8	460	ECI4A9P5	9.5	2, 68

(a) See notes on inside back flap.
(b) Integrated Drive Model – available as a renewal parts replacement assembly
Red catalog number indicates **NEW** product.
For EC Titanium Mod Express®, contact your local sales office.

NEW!

NEW!

EC Titanium™, Plenum Use, Aluminum Housing and Fan Cover, Non-Bluetooth Drive

BALDOR · RELIANCE II
SHAFT GROUNDING BRUSH
INSTALLED
LB1508

IP54

Features:

- IP54 Gasket Aluminum Cover Enclosure and Fan Cover
- Non-Bluetooth Drive
- Serial Modbus RJ45 Interface
- 2 Digital Inputs, 2 Configurable Inputs (Analog or Digital)
- 1 Relay Ouput
- IE5+ Motor Efficiency
- Class F Insulation with Class B Motor temperature
- Internal grounding brush for bearing current mitigation
- Motor rated for inverter use per NEMA MG1 Part 31.4.4.2

Applications:

- Fans
- Pumps
- Blowers
- Unit Handling
- HVAC Systems
- Variable Speed Applications
- General Purpose Applications

Hp	Base Speed RPM	C.H. Speed RPM	NEMA Frame	Enclosure	Catalog Number	List Price	Disc. Sym.	"C" Dim.	Aprx. Wt. (lb)	Full Load Eff.	Motor Input Amps	Drive Input Voltage	Drive Module (b)	Drive Output Amps	Notes (a)
EC Titanium, Top Mount Integrated Drive Motor, three phase, totally enclosed, 1 to 10 Hp															
1-phase 100V...115V AC (+/-10%) – 3 Phase 230V Output															
1	1800	4000	143T	TEFC	**ECS101T1H1DF4**	2,566	EC2	16.71	36	89.3%	2.4	115	ECIN1A3P2	3.2	2, 37, 68
1-phase 200...240V AC (+/-10%) – 3 Phase 230V Output															
1	1800	4000	143T	TEFC	**ECS101T8H1DF4**	2,566	EC2	16.71	35	89.3%	2.4	230	ECIN8A7P0	7	2, 37, 68
2	1800	4000	145T	TEFC	**ECS101T8H2DF4**	2,981	EC2	16.71	41	90.7%	4.4	230	ECIN8A7P0	7	2, 37, 68
3-phase 200...240V AC (+/-10%) – 3 Phase 230V Output															
1	1800	4000	143T	TEFC	**ECS101T2H1DF4**	2,566	EC2	16.71	35	89.3%	2.4	230	ECIN2A4P3	4.3	2, 37, 68
2	1800	4000	145T	TEFC	**ECS101T2H2DF4**	2,981	EC2	16.71	41	90.7%	4.3	230	ECIN2A7P0	7	2, 37, 68
3	1800	4000	182T	TEFC	**ECS101T2H3EF4**	3,371	EC2	22.25	66	92.8%	7.3	230	ECIN2A10P5	10.5	2, 68
5	1800	4000	184T	TEFC	**ECS101T2H5EF4**	3,570	EC2	22.25	77	93.7%	10.5	230	ECIN2A10P5	10.5	2, 68
3-phase 380...480V AC (+/-10%) – 3 Phase 460V Output															
1	1800	4000	143T	TEFC	**ECS101T4H1DF4**	2,566	EC2	16.71	35	89.3%	1.2	460	ECIN4A2P2	2.2	2, 37, 68
2	1800	4000	145T	TEFC	**ECS101T4H2DF4**	2,801	EC2	16.71	41	90.7%	2.2	460	ECIN4A2P2	2.2	2, 37, 68
3	1800	4000	145T	TEFC	**ECS101T4H3DF4**	3,353	EC2	16.71	47	91.4%	3.5	460	ECIN4A4P1	4.1	2, 68
3	1800	4000	182T	TEFC	**ECS101T4H3EF4**	3,371	EC2	22.25	67	92.8%	3.7	460	ECIN4A4P1	4.1	2, 68
5	1800	4000	184T	TEFC	**ECS101T4H5EF4**	3,570	EC2	22.25	77	93.7%	5.3	460	ECIN4A5P8	5.8	2, 37, 68
7 1/2	1800	4000	184T	TEFC	**ECS101T4H7EF4**	4,443	EC2	23.76	106	94.0%	8.8	460	ECIN4A9P5	9.5	2, 37, 68
7 1/2	1800	3000	213T	TEFC	**ECS101T4H7FF4**	4,772	EC2	18.1	111	94.7%	8.6	460	ECIN4A9P5	9.5	2, 68
10	1800	3000	215T	TEFC	**ECS101T4H10FF4**	5,621	EC2	19.23	132	94.8%	11	460	ECIN4A12P0	12	2, 68
EC Titanium, Axial Mount Integrated Drive Motor, three phase, totally enclosed, 1 to 7 1/2 Hp															
1-phase 100V...115V AC (+/-10%) – 3 Phase 230V Output															
1	1800	4000	143T	TEFC	**ECS101A1H1DB4**	2,607	EC3	16.71	36	89.3%	2.4	115	ECIN1A3P2	3.2	2, 37, 68
1-phase 200...240V AC (+/-10%) – 3 Phase 230V Output															
1	1800	4000	143T	TEFC	**ECS101A8H1DB4**	2,607	EC3	16.71	35	89.3%	2.4	230	ECIN8A7P0	7	2, 37, 68
2	1800	4000	145T	TEFC	**ECS101A8H2DB4**	3,022	EC3	16.71	41	90.7%	4.4	230	ECIN8A7P0	7	2, 37, 68
3-phase 200...240V AC (+/-10%) – 3 Phase 230V Output															
1	1800	4000	143T	TEFC	**ECS101A2H1DB4**	2,607	EC3	16.71	35	89.3%	2.4	230	ECIN2A4P3	4.3	2, 37, 68
2	1800	4000	145T	TEFC	**ECS101A2H2DB4**	3,022	EC3	16.71	41	90.7%	4.3	230	ECIN2A7P0	7	2, 37, 68
3	1800	4000	182T	TEFC	**ECS101A2H3EB4**	3,413	EC3	22.25	66	92.8%	7.3	230	ECIN2A10P5	10.5	2, 68
5	1800	4000	184T	TEFC	**ECS101A2H5EB4**	3,611	EC3	22.25	77	93.7%	10.5	230	ECIN2A10P5	10.5	2, 68
3-phase 380...480V AC (+/-10%) – 3 Phase 460V Output															
1	1800	4000	143T	TEFC	**ECS101A4H1DB4**	2,607	EC3	16.71	35	89.3%	1.2	460	ECIN4A2P2	2.2	2, 37, 68
2	1800	4000	145T	TEFC	**ECS101A4H2DB4**	2,842	EC3	16.71	41	90.7%	2.2	460	ECIN4A2P2	2.2	2, 37, 68
3	1800	4000	145T	TEFC	**ECS101A4H3DB4**	3,394	EC3	16.71	47	91.4%	3.5	460	ECIN4A4P1	4.1	2, 37, 68
3	1800	4000	182T	TEFC	**ECS101A4H3EB4**	3,413	EC3	22.25	67	92.8%	3.7	460	ECIN4A4P1	4.1	2, 68
5	1800	4000	184T	TEFC	**ECS101A4H5EB4**	3,611	EC3	22.25	77	93.7%	5.3	460	ECIN4A5P8	5.8	2, 68
7 1/2	1800	4000	184T	TEFC	**ECS101A4H7EB4**	4,486	EC3	23.76	106	94.0%	8.8	460	ECIN4A9P5	9.5	2, 68

(a) See notes on inside back flap. (b) Integrated Drive Model – available as a renewal parts replacement assembly
Red catalog number indicates **NEW** product.
For EC Titanium Mod Express®, contact your local sales office.

NEW!

NEW!

EC Titanium™ programming keypad and cable kits

Remote keypad ECS100L

- Designed for programming and control of the EC Titanium™.
- Kit comes with a 3-meter RJ45 cable

Copysticks ECS100B

- The COPYSTICK2 is used for fast and accurate repeat drive programming.
- Includes Bluetooth capability and communication status LED indication.
- LED indicators for parameter upload and download.
- Lock/Unlock function to prevent parameter overwrite.

RJ45 to USB Cable ECS100U

- PC Connection Kit, Isolated RJ45 to USB 3-meter Cable for ECM Software Tools.
- This kit is used when programming the drive with the PC Software Tools.
- High quality electrical separation between PC and Drive.
- Isolation voltage 2.5 vrms / 1 minute
- +/-15 kV ESD protection on RS485 pins
- Visual indicators (LED): 2 (Rx and Tx)
- Speed: up to 1 Mbps

Catalog Number	Description	List Price	Disc. Sym.	Ap'x Shpg. Wgt.
ECS100L	Remote Keypad	121	SVC	1
ECS100B	Copystick	267	SVC	1
ECS100U	RJ45 to USB Cable	541	SVC	1

Red catalog number indicates **NEW** product.

NEW!

RPM AC, Inverter Duty, three phase

5 thru 1750 Hp

Features:

- Power dense square laminated frame
- 1000:1 constant torque
- Class H, 40C, 1.0 SF
- 3 thermostats, one per phase
- For use on inverter only
- Induction and caged-IPM rotors
- Shaft Grounding Brush
- ABB Ability Smart Sensor Mounting Provisions
- QR Code provides motor data for inverter configuration

Applications:

- Extruders, conveyors, crane and hoist
- Web processing, process control, test stands
- Winders
- Centrifugal pumps and fans

Hp	Base Speed RPM	NEMA Frame	Enclosure	Catalog Number (b)	List Price	Disc. Sym.	Rotor Typer	"C" Dim.	Aprx. Wt. (lb)	Voltage	Full Load Amps	Notes (a)
5	1800	FL1838C	TENV	**IDNRPM18054C**	6,178	RP4	Induction	18.37	143	230/460	7.2	90
7 1/2	1800	FL1852C	TENV	**IDNRPM18074C**	7,102	RP4	Induction	21.87	194	230/460	11	91
10	1800	FL1844C	TEFC	**IDFRPM18104C**	7,783	RP3	Induction	23.26	179	230/460	13.9	91
		FL1838	TEFC	**IDCRPM18104**	9,849	RP3	Caged-IPM	21.76	158	460	10	106
		FL2162C	TENV	**IDNRPM21104C**	7,645	RP4	Induction	23.11	280	230/460	13.6	91
15	1800	FL1844C	TEBC	**IDBRPM18154C**	8,449	RP2	Induction	25.33	180	460	21	92
		FL1844C	TEFC	**IDCRPM18154**	12,141	RP3	Caged-IPM	23.26	180	460	15	106
		FL2162C	TEFC	**IDFRPM21154C**	8,811	RP3	Induction	26.49	290	460	20	92
20	1800	FL1852C	TEBC	**IDBRPM18204C**	9,224	RP2	Induction	27.33	209	460	27	92
		FL1848	TEFC	**IDCRPM18204**	12,608	RP3	Caged-IPM	24.26	194	460	20	106
		FL2162C	TEFC	**IDFRPM21204C**	8,811	RP3	Induction	26.49	290	460	27	92
25	1800	FL2162C	TEBC	**IDBRPM21254C**	9,638	RP2	Induction	28.55	290	460	34	92
		FL1844C	DPG-FV	**IDDRPM18254C**	9,664	RP1	Induction	19.87	200	460	33	92
		FL2158	TEFC	**IDCRPM21254**	13,072	RP3	Caged-IPM	25.49	270	460	25	106
		FL2173C	TEFC	**IDFRPM21254C**	9,516	RP3	Induction	29.50	355	460	34	92
30	1800	FL2162C	TEBC	**IDBRPM21304C**	9,638	RP2	Induction	28.55	290	460	40	92
		FL1852C	DPG-FV	**IDDRPM18304C**	10,023	RP1	Induction	21.87	230	460	39	92
		FL2162C	TEFC	**IDCRPM21304**	13,732	RP3	Caged-IPM	26.49	290	460	30	106
		FL2570C	TEFC	**IDFRPM25304C**	10,016	RP3	Induction	29.79	475	460	39	92
40	1800	FL2173	TEBC	**IDBRPM21404**	10,914	RP2	Induction	31.31	355	460	51	93
		RL2162	DPG-FV	**IDDRPM21404**	10,282	RP1	Induction	23.12	305	460	52	93
		FL2562	TEFC	**IDCRPM25404**	14,892	RP3	Caged-IPM	27.79	410	460	40	106
		FL2586	TEFC	**IDFRPM25404**	10,895	RP3	Induction	33.79	605	460	51	93
50	1800	FL2570	TEBC	**IDBRPM25504**	11,412	RP2	Induction	31.85	475	460	65	93
		RL2168	DPG-FV	**IDDRPM21504**	13,572	RP1	Induction	24.62	345	460	62	93
		FL2570	TEFC	**IDCRPM25504**	20,143	RP3	Caged-IPM	29.79	475	460	50	106
		FL2882	TEFC	**IDFRPM28504**	18,608	RP3	Induction	34.59	720	460	64	93
	1200	RL2570	DPG-FV	**IDDRPM25506**	15,740	RP1	Induction	26.38	480	460	64	93
60	1800	FL2578	TEBC	**IDBRPM25604**	16,624	RP2	Induction	33.85	540	460	75	93
		FL2873	TEFC	**IDCRPM28604**	22,795	RP3	Caged-IPM	32.34	635	460	60	106
		RL2168	DPG-FV	**IDDRPM21604**	13,108	RP1	Induction	24.62	345	460	74	93
		FL2890	TEFC	**IDFRPM28604**	18,608	RP3	Induction	36.59	795	460	76	93
	1200	RL2578	DPG-FV	**IDDRPM25606**	19,085	RP1	Induction	28.38	545	460	73	93
75	1800	FL2586	TEBC	**IDBRPM25754**	19,765	RP2	Induction	35.85	605	460	95	93
		RL2570	DPG-FV	**IDDRPM25754**	15,740	RP1	Induction	26.38	480	460	95	93
		FL2882	TEFC	**IDCRPM28754**	26,339	RP3	Caged-IPM	34.59	720	460	75	106
		FL2898	TEFC	**IDFRPM28754**	22,231	RP3	Induction	38.59	880	460	94	93
	1200	RL2586	DPG-FV	**IDDRPM25756**	25,291	RP1	Induction	30.38	615	460	91	93

(a) See notes on inside back flap.
(b) The "R1" suffix indicates the latest revision FL or RL from the previous L frame design
All TEBC and DPG-FV have integral blower rated 230/460 volts 3 phase. All TENV, TEFC and TEBC have top mounted conduit box. All DPG-FV are F1.
Encoder mounting provisions - include machined ODE bracket and shaft tapped for stub shaft.
For closed loop control see encoder feedback kits for use with ID-RPM AC motors.
For RPM AC Mod Express®, contact your local sales office.

RPM AC, Inverter Duty, three phase (continued)

Hp	Base Speed RPM	NEMA Frame	Enclosure	Catalog Number (b)	List Price	Disc. Sym.	Rotor Typer	"C" Dim.	Aprx. Wt. (lb)	Voltage	Full Load Amps	Notes (a)
100	1800	FL2890	TEBC	**IDBRPM281004R1**	22,309	RP2	Induction	41.11	805	460	124	93
		FL2890	TEFC	**IDCRPM281004**	34,349	RP3	Caged-IPM	38.59	880	460	100	106
		RL2578	DPG-FV	**IDDRPM251004**	19,085	RP1	Induction	28.38	545	460	119	93
	1200	RL2882	DPG-FV	**IDDRPM281006**	28,237	RP1	Induction	31.14	770	460	124	93
125	1800	FL2898	TEBC	**IDBRPM281254**	23,580	RP2	Induction	43.11	890	460	156	93
		FL2898	TEFC	**IDCRPM281254**	40,958	RP3	Caged-IPM	38.59	880	460	125	106
		RL2586	DPG-FV	**IDDRPM251254**	25,291	RP1	Induction	30.38	615	460	148	93
	1200	RL2898	DPG-FV	**IDDRPM281256**	36,813	RP1	Induction	35.14	930	460	150.9	93
150	1800	FL3203	TEBC	**IDBRPM321504R1**	32,840	RP2	Induction	55.13	1310	460	177	93
		RL2882	DPG-FV	**IDDRPM281504**	28,237	RP1	Induction	31.14	770	460	180	93
	1200	RL3203	DPG-FV	**IDDRPM321506R1**	43,317	RP1	Induction	39.88	1185	460	180	93
200	1800	FL3698	TEBC	**IDBRPM362004R1**	45,316	RP2	Induction	56.30	1950	460	227	93
		RL2898	DPG-FV	**IDDRPM282004**	36,813	RP1	Induction	35.14	930	460	237	93
	1200	RL3213	DPG-FV	**IDDRPM322006R1**	50,443	RP1	Induction	42.38	1325	460	236	93
250	1800	FL3614	TEBC	**IDBRPM362504R1**	48,385	RP2	Induction	43.47	2000	460	283	93
		RL3203	DPG-FV	**IDDRPM322504R1**	43,317	RP1	Induction	39.88	1185	460	295	93
	1200	RL3698	DPG-FV	**IDDRPM362506R1**	54,917	RP1	Induction	39.47	1680	460	289	93
300	1800	FL4034	TEBC	**IDBRPM403004R1**	60,460	RP2	Induction	65.46	2620	460	336	93
		RL3213	DPG-FV	**IDDRPM323004R1**	50,443	RP1	Induction	42.38	1325	460	350	93
	1200	RL3614	DPG-FV	**IDDRPM363006R1**	63,875	RP1	Induction	43.47	2000	460	360	93
350	1800	RL3698	DPG-FV	**IDDRPM363504R1**	54,917	RP1	Induction	39.47	1680	460	401	93
400	1800	RL3614	DPG-FV	**IDDRPM364004R1**	63,877	RP1	Induction	43.47	2000	460	477	93
		FL4440	TEBC	**IDBRPM444004**	92,547	RP2	Induction	78.57	3940	460	479	93
	1200	RL4034	DPG-FV	**IDDRPM404006R1**	84,322	RP1	Induction	48.62	2530	460	451	93
500	1800	FL4461	TEBC	**IDBRPM445004**	104,482	RP2	Induction	78.57	4260	460	591	93
		RL4022	DPG-FV	**IDDRPM405004R1**	74,096	RP1	Induction	45.62	2260	460	557	93
	1200	RL4058	DPG-FV	**IDDRPM405006**	108,400	RP1	Induction	54.62	2230	460	590	94
600	1800	FL5824	TEBC	**IDBRPM586004**	232,371	RP2	Induction	84.94	7160	460	708	108
		RL4046	DPG-FV	**IDDRPM406004R1**	102,800	RP1	Induction	48.62	2530	460	666	94
	1200	RL4451	DPG-FV	**IDDRPM446006**	150,429	RP1	Induction	61.11	3505	460	747	94
700	1800	FL5824	TEBC	**IDBRPM587004**	232,371	RP2	Induction	84.94	7160	460	826	108
		RL4058	DPG-FV	**IDDRPM407004R1**	107,936	RP1	Induction	54.62	3080	460	875	94
	1200	RL4473	DPG-FV	**IDDRPM447006**	172,045	RP1	Induction	66.61	3505	460	864	94
800	1800	FL5826	TEBC	**IDBRPM588004**	243,205	RP2	Induction	86.94	7510	460	944	108
		RL4440	DPG-FV	**IDDRPM448004**	139,619	RP1	Induction	54.62	3080	460	875	94
	1200	RL5020	DPG-FV	**IDDRPM508006**	181,004	RP1	Induction	61.57	4690	460	908	94
900	1800	FL5830	TEBC	**IDBRPM589004**	264,880	RP2	Induction	90.94	8210	460	1062	108
		RL4451	DPG-FV	**IDDRPM449004**	150,429	RP1	Induction	61.11	3505	460	1094	94
	1200	RL5024	DPG-FV	**IDDRPM509006**	191,106	RP1	Induction	65.51	5200	460	1025	94
1000	1800	FL5832	TEBC	**IDBRPM5810004**	275,718	RP2	Induction	92.94	8540	460	1180	108
		RL4461	DPG-FV	**IDDRPM4410004R1**	160,783	RP1	Induction	63.61	3505	460	1202	94
	1200	RL5024	DPG-FV	**IDDRPM5010006**	191,106	RP1	Induction	65.51	5200	460	1133	94
1250	1800	RL5024	DPG-FV	**IDDRPM5012504**	191,106	RP1	Induction	65.51	5200	460	1373	94
	1200	RL5035	DPG-FV	**IDDRPM5012506**	217,614	RP1	Induction	77.32	6730	460	1379	94
1400	1200	RL5035	DPG-FV	**IDDRPM5014006**	217,614	RP1	Induction	77.32	6730	460	1577	94
1500	1800	RL5030	DPG-FV	**IDDRPM5015004**	203,631	RP1	Induction	71.41	5963	460	1633	94
1750	1800	RL5035	DPG-FV	**IDDRPM5017504**	217,614	RP1	Induction	77.32	6730	600	1483	94

(a) See notes on inside back flap.
(b) The "R1" suffix indicates the latest revision FL or RL from the previous L frame design
Red catalog number indicates **NEW** product.
All TEBC and DPG-FV have integral blower rated 230/460 volts 3 phase. All TENV, TEFC and TEBC have top mounted conduit box. All DPG-FV are F1.
Encoder mounting provisions - include machined ODE bracket and shaft tapped for stub shaft.
For closed loop control see encoder feedback kits for use with ID-RPM AC motors.
For RPM AC Mod Express®, contact your local sales office.

RPM AC, Vector Duty, three phase, totally enclosed

5 thru 150 Hp

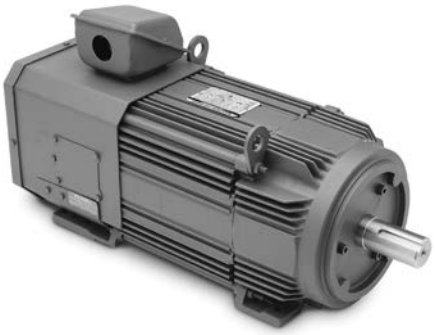

Features:

- Power dense square laminated frame
- 1000:1 constant torque
- Class H, 40C, 1.0 SF
- 3 thermostats, one per phase
- Speed feedback device included (b)
- For use on inverter only
- Induction and salient pole-IPM rotors
- Shaft Grounding Brush
- ABB Ability Smart Sensor Mounting Provisions
- QR Code provides motor data for inverter configuration

Applications:

- Extruders, conveyors, crane and hoist, winders
- Web processing, process control, test stands
- Centrifugal pumps and fans

Hp	Base Speed RPM	NEMA Frame	Enclosure	Catalog Number	List Price	Disc. Sym.	Rotor Type	"C" Dim.	Aprx. Wt. (lb)	Voltage	Full Load Amps	Notes (a)
5	1800	FL1838C	TENV	**ZDNRPM18054C**	10,006	RP4	Induction	17.87	143	230/460	7.2	90
7 1/2	1800	FL1852C	TENV	**ZDNRPM18074C**	10,931	RP4	Induction	21.87	194	230/460	11	91
10	1800	FL1844C	TEFC	**ZDFRPM18104C**	11,611	RP3	Induction	23.26	179	230/460	13.9	91
		FL1831C	TEBC	**ZDPM18010C-BV**	16,760	RP2	IPM	22.08	132	230/460	10.6	91
		FL2162C	TENV	**ZDNRPM21104C**	11,125	RP4	Induction	22.73	280	230/460	13.6	91
15	1800	FL1844C	TEBC	**ZDBRPM18154C**	11,449	RP2	Induction	25.33	180	460	21	92
		FL1838C	TEBC	**ZDPM18015C-BV**	16,868	RP2	IPM	22.71	158	460	16	92
20	1800	FL1852C	TEBC	**ZDBRPM18204C**	12,225	RP2	Induction	27.96	209	460	27	92
		FL1844C	TEBC	**ZDPM18020C-BV**	17,622	RP2	IPM	25.96	180	460	21.7	92
		FL2162C	TEFC	**ZDFRPM21204C**	12,291	RP3	Induction	28.55	290	460	27	92
25	1800	FL2173C	TEFC	**ZDFRPM21254C**	12,995	RP3	Induction	31.31	355	460	34	92
		FL1852C	TEBC	**ZDPM18025C-BV**	18,959	RP2	IPM	27.96	209	460	26.6	92
30	1800	FL2162C	TEBC	**ZDBRPM21304C**	12,366	RP2	Induction	28.55	290	460	40	92
		FL1852C	TEBC	**ZDPM18030C-BV**	18,959	RP2	IPM	27.96	209	460	32.3	92
		FL2570C	TEFC	**ZDFRPM25304C**	13,642	RP3	Induction	29.54	475	460	39	92
40	1800	FL2173	TEBC	**ZDBRPM21404**	13,010	RP2	Induction	31.31	355	460	51	93
		FL2162	TEBC	**ZDPM21040-BV**	17,742	RP2	IPM	28.55	290	460	43.2	93
		FL2586	TEFC	**ZDFRPM25404**	14,087	RP3	Induction	35.85	605	460	51	93
50	1800	FL2570	TEBC	**ZDBRPM25504**	14,140	RP2	Induction	31.85	475	460	65	93
		FL2168	TEBC	**ZDPM21050-BV**	18,141	RP2	IPM	30.06	325	460	53.4	93
60	1800	FL2578	TEBC	**ZDBRPM25604**	19,352	RP2	Induction	33.85	540	460	75	93
		FL2173	TEBC	**ZDPM21060-BV**	19,239	RP2	IPM	31.31	355	460	65.7	93
75	1800	FL2586	TEBC	**ZDBRPM25754**	22,493	RP2	Induction	35.85	605	460	95	93
		FL2578	TEBC	**ZDPM25075-BV**	27,348	RP2	IPM	33.85	540	460	81.8	93
100	1800	FL2890	TEBC	**ZDBRPM281004R1**	25,036	RP2	Induction	41.27	805	460	124	93
		FL2586	TEBC	**ZDPM25100-BV**	28,294	RP2	IPM	35.85	605	460	110.6	93
125	1800	FL2898	TEBC	**ZDBRPM281254**	26,308	RP2	Induction	43.27	890	460	156	93
		FL2882	TEBC	**ZDPM28125-BV**	29,817	RP2	IPM	39.27	730	460	137	93
150	1800	FL2890	TEBC	**ZDPM28150-BV**	31,051	RP2	IPM	41.27	805	460	168	93

(a) See notes on inside back flap.
(b) Induction motor feedback BEI HS35 1024PPR encoder, IPM motor feedback Dynapar HS25 resolver.
All TEBC have integral blower rated 230/460 volts 3 phase.
Continuous constant torque to zero speed

Encoder feedback kits

Includes all mounting hardware and mating connector.
The following kits for use with RPM AC motors on previous pages.

Catalog Number	Motor Enclosure	Manufacturer	Type	PPR	Frame Size	Magnetic or Optical	Connector Type	Input Voltage VDC	List Price	Disc. Sym.	Ap'x. Shpg. Wgt.
417077-136	TENV, DPFV	BEI	HS35	1024	FL180 - FL/RL440	O	MS-ST	5 - 15	1,752	SVC	5
417077-208TL	TENV, DPFV	BEI	HS35	1024	FL180 - FL/RL440	O	MS-TL	5 - 28	1,752	SVC	5
417077-153	TENV, DPFV	Dynapar	H20	1024	FL180 - FL/RL440	O	MS-ST	5 - 15	2,393	SVC	9
417077-156	TENV, DPFV	Dynapar	ST67	1024	FL180 - FL/RL440	M	Latch	5 - 15	2,997	SVC	9
417077-242TL	TENV, DPFV	Dynapar	HS35R	1024	FL180 - FL/RL440	O	MS-TL	5 - 26	2,173	SVC	6
417077-170	TENV, DPFV	Avtron	HS35M	1024	FL180 - FL/RL440	M	MS-ST	5 - 24	2,173	SVC	10
417077-133	TEFC	BEI	HS35	1024	FL180 - FL440	O	MS-ST	5 - 15	1,752	SVC	5
417077-165	TEBC	BEI	HS35	1024	FL180	O	MS-ST	5 - 15	1,752	SVC	10
417077-188	TEBC	BEI	HS35	1024	FL210	O	MS-ST	5 - 15	1,752	SVC	15
417077-189	TEBC	BEI	HS35	1024	FL250	O	MS-ST	5 - 15	1,752	SVC	15
417077-212TL	TEBC	BEI	HS35	1024	FL250	O	MS-TL	5 - 28	1,752	SVC	15
417077-213TL	TEBC	BEI	HS35	1024	FL280	O	MS-TL	5 - 28	1,752	SVC	15
417077-244	TEBC	BEI	HS35	1024	FL320 - FL440	O	MS-TL	5 - 28	1,752	SVC	5
417077-167	TEBC	Dynapar	H20	1024	FL180	O	MS-ST	5 - 15	2,503	SVC	10
417077-151	TEBC	Dynapar	H20	1024	FL210	O	MS-ST	5 - 15	2,503	SVC	20
417077-191	TEBC	Dynapar	H20	1024	FL250	O	MS-ST	5 - 15	2,503	SVC	20
417077-168	TEBC	Dynapar	ST67	1024	FL180	M	Latch	5 - 15	2,997	SVC	20
417077-192	TEBC	Dynapar	ST67	1024	FL210	M	Latch	5 - 15	2,997	SVC	20
417077-168	TEBC	Dynapar	ST67	1024	FL250	M	Latch	5 - 15	2,997	SVC	20
417077-206	TEBC	Dynapar	ST67	1024	FL280	M	Latch	5 - 15	2,997	SVC	20
417077-245	TEBC	Dynapar	ST67	1024	FL320 - FL440	M	Latch	5 - 15	2,855	SVC	9
417077-173	TEBC	Avtron	HS35M	1024	FL180	M	MS-ST	5 - 24	2,612	SVC	10
417077-182	TEBC	Avtron	HS35M	1024	FL210	M	MS-ST	5 - 24	2,612	SVC	15
417077-183	TEBC	Avtron	HS35M	1024	FL250	M	MS-ST	5 - 24	2,612	SVC	15
417077-205	TEBC	Avtron	HS35M	1024	FL280	M	MS-ST	5 - 24	2,612	SVC	15
417077-246	TEBC	Avtron	HS35M	1024	FL320 - FL440	M	MS-ST	5 - 24	2,612	SVC	10
417077-300	TENV, DPFV	Avtron	HS35M	2048	FL180 - FL/RL440	M	Latch	5-24V	3,152	SVC	5
417077-301	TEBC	Avtron	HS35M	2048	FL180	M	Latch	5-24V	4,155	SVC	13
417077-302	TEBC	Avtron	HS35M	2048	FL210	M	Latch	5-24V	4,155	SVC	15
417077-303	TEBC	Avtron	HS35M	2048	FL250	M	Latch	5-24V	4,155	SVC	15
417077-304	TEBC	Avtron	HS35M	2048	FL280	M	Latch	5-24V	4,155	SVC	15
417077-305	TEBC	Avtron	HS35M	2048	FL320	M	Latch	5-24V	3,912	SVC	5

Encoder feedback kits RPM AC designs

Catalog Number	Motor Enclosure	Type	Frame Size	Mfg.	Magnetic or Optical	Connector Type	Input Voltage VDC	List Price	Disc. Sym.	Ap'x. Shpg. Wgt.
417077-153	DPFV	H20	FL180-RL280 (2)	Dynapar	O	MS-ST	5-15	2,393	SVC	9
417708-85	DPFV	H20	L280-L400	Dynapar	O	MS-ST	5-15	2,306	SVC	5
417077-156	DPFV	RL67	FL180-RL280 (2)	Dynapar	M	Latch	5-15	2,997	SVC	9
417708-87	DPFV	RL67	L280-L400	Dynapar	M	Latch	5-15	2,745	SVC	6
417708-120	DPFV	RL67	L440	Dynapar	M	Latch	5-15	2,997	SVC	23

(1) Includes FL180, FL210, FL250, RL210, RL250, FL280, RL280, FDL11, FDL13, FDL16, FDL18, RDL13, RDL16 and RDL18.
(2) Includes FL180, RL210, RL250, RL280, FDL11, RDL13, RDL16 and RDL18

Encoder mounting kits – no encoder

Kit includes stub shaft only (no encoder)
Unmounted – for RPM AC motor frames FL180-L440

Encoder (reference)	Frame	Enclosure	Catalog Number	List Price	Disc. Sym.
BEI HS35 (1 inch dia.)	FL180-FL/RL250 (3)	DPFV,TENV,TEFC,TEBC (2)	**417708-201**	577	SVC
	FL/RL280 thru L400	DPFV & TEBC (2)	**417708-202**	577	SVC
	L440	DPFV & TEAO-P/B	**417708-203**	577	SVC

(2) Note: encoder addition requires an extended blower cover on TEBC motors in all frames except L320. Cover is included in complete kits only.
(3) Includes FL180, FL210, FL250, RL210, RL250

Encoder mounting kits – no encoder

Kit to include 5/8″ dia. stub shaft and extended blower shroud when required

Catalog Number	Motor Enclosure	Type	Frame Size	Mfg.	List Price	Disc. Sym.	Ap'x. Shpg. Wgt.
417708-184	TENV, DPFV	HS35M	FL180 - FL/RL440	Avtron	834	SVC	3
417708-185	TEBC	HS35M	FL180	Avtron	966	SVC	11
417708-186	TEBC	HS35M	FL210	Avtron	973	SVC	13
417708-187	TEBC	HS35M	FL250	Avtron	1,071	SVC	13
417708-188	TEBC	HS35M	FL280	Avtron	1,054	SVC	13
417708-189	TEBC	HS35M	FL320-FL440	Avtron	721	SVC	3

RPM AC slide bases

Application: Used for adjustable belt tension on belted application not suitable for wall or ceiling mounting.

Frame	Catalog Number	List Price	Disc. Sym.	Dimension Sheet	Approx. Wt. (Lb.)
FL1831	**419914-9A**	899	SVC	609957-9	13
FL1838	**419914-9B**	899	SVC	609957-9	14
FL1844	**419914-9C**	899	SVC	609957-9	15
FL1852	**419914-9D**	899	SVC	609957-9	17
FL/RL2153	**419914-10A**	899	SVC	609957-10	39
FL/RL2158	**419914-10B**	899	SVC	609957-10	27
FL/RL2162	**419914-10D**	1,020	SVC	609957-10	48
FL/RL2168	**419914-10L**	1,020	SVC	609957-10	52
FL/RL2173	**419914-10M**	1,020	SVC	609957-10	28
FL/RL2570	**419914-10G**	1,154	SVC	609957-10	55
FL/RL2578	**419914-10N**	1,853	SVC	609957-10	58
FL/RL2586	**419914-10P**	1,804	SVC	609957-10	56
FL/RL/L2882	**419914-10K**	1,222	SVC	609957-10	80
FL/RL/L2890	**419914-10R**	1,727	SVC	609957-10	80
FL/RL/L2898	**419914-10S**	1,727	SVC	609957-10	90
FL/RL3203	**419914-11P**	1,849	SVC	609977-10	90
FL/RL3213	**419914-11R**	1,849	SVC	609977-10	90
UFL/URL3698	**419914011M**	1,970	SVC	609977-10	105
UFL/URL3614	**419914-11N**	2,168	SVC	609977-10	124
UFL/URL4034	**419914011F**	3,008	SVC	609977-10	132
UFL/URL4046	**419914-11G**	4,580	SVC	609977-10	141
UFL/URL4429	**419914011H**	5,675	SVC	609977-10	140
UFL/URL4440	**419914011J**	5,675	SVC	609977-10	150
UFL/URL4451	**419914011K**	5,675	SVC	609977-10	160
UFL/URL4461	**419914011L**	5,675	SVC	609977-10	165

Red catalog number indicates **NEW** product.

RPM AC filter kits

Application: For use with DPFV enclosures

Frame	Catalog Number	List Price	Disc. Sym.	Description	Approx. Wt. (Lb.)
FL180	**417077-57**	1,107	SVC	Washable Wire Mesh Canister Type	2
RL210	**417077-59**	1,107	SVC	Washable Wire Mesh Canister Type	4
RL250		1,107	SVC	Washable Wire Mesh Canister Type	4
RL280		1,107	SVC	Washable Wire Mesh Canister Type	4
RL320		1,107	SVC	Washable Wire Mesh Canister Type	4
RL360	**417077-102**	1,415	SVC	Washable Wire Mesh Canister Type	6
RL400		1,415	SVC	Washable Wire Mesh Canister Type	6
RL440	**417077-124**	2,300	SVC	Square Replaceable Polyester Type	18

RPM AC mounting conversion kits for FL180 - FL/RL280 frames

Kits are for relocation of the conduit box of stock FL180 - FL/RL280 frame motors as noted.
Installation of this kit requires complete disassembly/reassembly of motor.
Price is for kit only.

Frame	Catalog Number	List Price	Disc. Sym.	Enclosure	Relocate Conduit Box:
For FL180-FL280 frames					
FL180	**417077-184**	1,443	SVC	TENV, TEBC, TEFC	From Top to F-1 or F-2
FL180	**417077-185**	1,443	SVC	DPFV	From F-1 to F-2
FL210	**417077-186**	1,276	SVC	TENV, TEBC, TEFC	From Top to F-1 or F-2
FL250	**417077-187**	1,443	SVC	TENV, TEBC, TEFC	From Top to F-1 or F-2
FL280	**417077-201**	2,102	SVC	TENV, TEBC, TEFC	From Top to F-1 or F-2
For RL210-RL280 frames					
RL250 thru RL2586	**417077-131**	1,367	SVC	DPFV	From F-1 to F-2
RL2153 thru RL2173	**417077-130**	1,367	SVC	DPFV	From Top to F-1 or F-2
RL2882 thru RL2898	**417077-202**	1,519	SVC	DPFV	From F-1 to F-2

Replacement blower kits for DPG-FV RPM AC motors

Kit includes blower motor and shroud, blower wheel and all mounting hardware. Filter is not included.

DPFV Frame	Catalog Number	List Price	Disc. Sym.
RL210	**417077-144**	1,387	SVC
RL250	**417077-145**	2,130	SVC
RL280	**419947-40**	2,122	SVC
RL320	**419947-43**	2,361	SVC
RL360	**419947-41**	2,579	SVC
RL400	**419947-42**	2,823	SVC

Kit includes terminal box and blower motor only.

TEBC Frame	Catalog Number	List Price	Disc. Sym.
FL180 (3)	**417077-143**	1,090	SVC
FL210-250 (3)	**417077-141**	1,387	SVC

(3) Compact inline blower used on stock models (IP44 rating)
Red catalog number indicates **NEW** product.

Roller bearing kits for RPM AC motors

Catalog Number	Frame	Description	List	Disc. Sym.
418057-645	FL/RL280	Kit – Convert FL/RL280 to roller bearing	1,197	SVC
418057-786	FL/RL320	Kit – Convert FL/RL320 to roller bearing	1,181	SVC
418057-764	FL/RL360 & 400	Kit – Convert FL/RL360 & 400 to roller bearing	2,020	SVC
418057-501	FL/RL440	Kit – Convert FL/RL440 to roller bearing	3,360	SVC

Red catalog number indicates **NEW** product.

V*S Master Inverter Duty motors, three phase, totally enclosed

1/3 thru 300 Hp

Features:

- TENV, TEFC and TEBC, 1000:1CT
- Provisions for encoder mounting
- 3 thermostats, one per phase
- Standard NEMA frame sizes

Applications:

- Extruders, conveyors, crane and hoist, winders
- Web processing, process control, test stands
- Centrifugal pumps and fans

Hp	Base Speed RPM	C.H. Speed RPM	NEMA Frame	Enclosure	Catalog Number	List Price	Disc. Sym.	"C" Dim.	Aprx. Wt. (lb)	Full Load Efficiency	Voltage	Full Load Amps	Notes (a)
1/3	1800	2700	56C	TENV	**IDVSNM3534**	759	VS4	13.84	32	80	230/460	0.6	2, 48
			56C	TENV	**IDNM3534**	759	VS4	13.84	33	80	230/460	0.6	2, 8, 60,106
1/2	1800	2700	56C	TENV	**IDVSNM3538**	886	VS4	13.84	35	84	230/460	0.9	2, 48
			56C	TENV	**IDNM3538**	886	VS4	13.84	31	80	230/460	0.8	2, 8, 60,106
			56C	TENV	**IDVSNM3538-5**	886	VS4	13.84	31	84	575	0.6	2,48
3/4	1800	2700	56C	TENV	**IDVSNM3542**	988	VS4	13.84	36	84	230/460	1.2	2, 48
			56C	TENV	**IDNM3542**	988	VS4	13.84	33	78.5	230/460	1.4	2, 8, 60,106
			56C	TENV	**IDVSNM3542-5**	988	VS4	13.84	35	84	575	0.9	2,48
1	1800	2700	56C	TENV	**IDVSNM3546**	1,605	VS4	14.84	45	87.5	230/460	1.5	2, 48
			56C	TENV	**IDVSNM3546-5**	1,605	VS4	14.84	45	87.5	575	1.2	2,48
			143TC	TENV	**IDVSNM3581T**	2,014	VS4	14.65	58	85.5	230/460	1.5	2, 48
			143TC	TENV	**IDNM3581T**	2,014	VS4	14.65	58	85.5	230/460	1.5	2, 8, 60,106
			143TC	TENV	**IDVSNM3581T-5**	2,014	VS4	14.65	58	85.5	575	1.2	2, 48
			143TC	TEBC	**IDM3581T**	2,661	VS2	19.00	65	87.5	230/460	1.5	2, 8,106
			143TC	TEBC	**IDM3581T-5**	2,661	VS2	19.02	65	85.5	575	1.2	2, 8,106
	1200	2800	145TC	TENV	**IDVSNM3582T**	3,119	VS4	14.65	61	82.5	230/460	1.8	2, 48
			145TC	TEBC	**IDM3582T**	3,125	VS2	19.02	68	82.5	230/460	1.8	2, 8,106
1 1/2	1800	2700	145TC	TENV	**IDVSNM3584T-5**	2,224	VS4	14.65	64	86.5	575	1.7	2, 48
			145TC	TENV	**IDVSNM3584T**	2,224	VS4	14.65	64	82.5	230/460	2.1	2, 48
			145TC	TENV	**IDNM3584T**	2,224	VS4	14.65	58	84	230/460	2.3	2, 8, 60,106
			145TC	TEBC	**IDM3584T**	2,814	VS2	19.02	70	88.5	230/460	2.1	2, 8,106
			145TC	TEBC	**IDM3584T-5**	2,814	VS2	19.02	70	88.5	575	1.7	2, 8,106
	1200	1800	182TC	TEBC	**IDM3667T**	3,729	VS2	21.71	107	87.5	230/460	2.5	2, 8,106
2	1800	2700	145TC	TENV	**IDVSNM3587T-5**	2,322	VS4	14.65	62	86.5	575	2.3	2, 48
			145TC	TENV	**IDVSNM3587T**	2,322	VS4	14.65	63	86.5	230/460	2.8	2, 48
			145TC	TEBC	**IDM3587T**	3,009	VS2	19.02	72	88.5	230/460	2.7	2, 8,106
			145TC	TEBC	**IDM3587T-5**	3,009	VS2	19.02	73	88.5	575	2.3	2, 8,106
			145TC	TENV	**IDNM3587T**	2,322	VS4	14.65	67	86.5	230/460	2.8	2, 8, 60,106
			182TC	TENV	**IDNM3669T**	2,695	VS4	17.21	94	84	230/460	2.9	2, 8, 60,106
	1200	1800	184TC	TEBC	**IDM3664T**	3,610	VS2	21.71	124	88.5	230/460	3.2	2, 8,106
3	1800	2700	182TC	TEFC	**IDVSM3661T**	2,564	VS3	20.23	105	89.5	230/460	4.1	2, 48
			182TC	TENV	**IDVSNM3661T**	3,043	VS4	17.85	111	89.5	230/460	4.3	2, 48
			184TC	TEBC	**IDM3661T**	3,043	VS2	21.71	111	89.5	230/460	4.1	2, 8,106
			184TC	TEBC	**IDM3661T-5**	3,043	VS2	21.71	112	89.5	575	3.3	2, 8,106
			184TC	TENV	**IDNM3661T-5**	3,043	VS4	17.85	108	88.5	575	3.4	2,48
			184TC	TENV	**IDNM3661T**	3,043	VS4	17.21	108	88.5	230/460	4.2	2, 8, 60,106
	1200	1800	213TC	TEBC	**IDM3764T**	4,721	VS2	29.14	187	90.2	230/460	4.5	2, 8, 70,106

(a) See notes on inside back flap.

Cast iron frame

Continuous constant torque to zero speed

V*S Master Inverter Duty motors, three phase, totally enclosed (continued)

Hp	Base Speed RPM	C.H. Speed RPM	NEMA Frame	Enclosure	Catalog Number	List Price	Disc. Sym.	"C" Dim.	Aprx. Wt. (lb)	Full Load Efficiency	Voltage	Full Load Amps	Notes (a)
5	1800	2700	184TC	TEFC	**IDVSM3665T**	2,973	VS3	20.23	120	89.5	230/460	6.6	2, 48
			184TC	TENV	**IDVSNM3665T**	3,393	VS4	17.85	124	89.5	230/460	6.6	2, 48
			184TC	TEFC	**IDVSM3665T-5**	2,973	VS3	20.23	118	90.2	575	5.2	2, 48
			184TC	TEBC	**IDM3665T**	4,066	VS2	21.71	124	90.2	230/460	6.5	2,8,106
			184TC	TEBC	**IDM3665T-5**	4,066	VS2	21.71	124	90.2	575	5.2	2, 8,106
			184TC	TENV	**IDNM3665T-5**	3,393	VS4	17.21	116	89.5	575	5.2	2,48
			184TC	TENV	**IDNM3665T**	3,393	VS4	17.21	116	89.5	230/460	6.6	2, 8, 60,106
			213TC	TENV	**IDNM3767T**	3,782	VS4	20.40	170	89.5	230/460	6.7	2, 8, 60,106
	1200	1800	215TC	TEBC	**IDM3768T**	5,778	VS2	29.14	226	90.2	230/460	7.3	2, 8, 70,106
7 1/2	1800	2700	213TC	TEFC	**IDVSM3770T**	3,825	VS3	24.59	180	91.7	230/460	9.5	2, 48
			215TC	TENV	**IDVSNM2237T**	3,933	VS4	20.86	212	91.7	230/460	10.1	2, 48
			213TC	TEBC	**IDM3770T**	4,902	VS2	29.14	170	91.7	230/460	9.5	2, 8, 70,106
			213TC	TEBC	**IDM3770T-5**	4,902	VS2	30.07	170	91.7	575	7.5	2, 8, 70,106
			215TC	TENV	**IDVSNM2237T-5**	3,933	VS4	20.46	196	91.7	575	8.2	2,48
			254TC	TENV	**IDNM2237T**	4,704	VS4	24.05	242	90.2	230/460	9.1	2, 8, 60,106
			213TC	TENV	**IDNM3770T**	3,927	VS4	20.40	196	91.7	230/460	10.1	2, 8, 60,106
	1200	1800	254TC	TEBC	**IDM2276T**	8,308	VS2	33.07	332	91	230/460	10.7	2, 8, 70,106
10	1800	2700	215TC	TEFC	**IDVSM3774T**	4,987	VS3	24.59	231	92.4	230/460	12.5	2, 48
			254TC	TENV	**IDVSNM2238T**	5,395	VS4	24.05	305	91.7	230/460	13	2, 48
			215TC	TEBC	**IDM3774T**	5,252	VS2	29.14	231	92.4	230/460	12.5	2, 8, 70,106
			215TC	TEBC	**IDM3774T-5**	5,252	VS2	30.07	231	92.4	575	10	2, 8, 70,106
			215TC	TEFC	**IDVSM3774T-5**	4,987	VS3	24.59	231	92.4	575	10	2,48
			256TC	TENV	**IDNM2238T**	5,395	VS4	24.05	286	91.7	230/460	13	2, 8, 60,106
	1200	1800	256TC	TEBC	**IDM2332T**	10,151	VS2	33.07	352	91.7	230/460	14.2	2, 8, 70,106
15	1800	2700	254TC	TEFC	**IDVSM2333T**	5,802	VS3	26.71	291	92.4	230/460	18	2, 48
			256TC	TENV	**IDVSNM2333T**	6,488	VS4	24.05	284	93.6	230/460	18.5	2, 48
			256TC	TEBC	**IDM2333T**	5,708	VS2	33.07	318	92.4	230/460	18.1	2, 8, 70,106
			256TC	TEBC	**IDM2333T-5**	5,708	VS2	34.15	318	92.4	575	14.5	2, 8, 70,106
			256TC	TENV	**IDVSNM2333T-5**	6,488	VS4	24.05	284	93.6	575	14.8	2,48
			254TC	TENV	**IDNM2333T**	6,488	VS4	24.05	286	93.6	230/460	18.5	2, 8, 60,106
	1200	1800	284T	TEBC	**IDM4100T**	12,034	VS2	36.48	450	93	230/460	19.7	2, 8, 45, 70,106
20	1800	2700	256TC	TEFC	**IDVSM2334T**	6,290	VS3	26.71	321	93	230/460	24	2, 48
			256TC	TEBC	**IDM2334T**	6,097	VS2	33.07	333	93	230/460	24	2, 8, 70,106
			256TC	TEBC	**IDM2334T-5**	6,097	VS2	34.15	333	93	575	19	2, 8, 70,106
			256TC	TEFC	**IDVSM2334T-5**	6,290	VS3	26.71	321	93	575	19.2	2,48
			284T	TENV	**IDNM2334T**	7,005	VS4	27.36	406	94.5	230/460	25.5	2, 8, 45, 60,106
	1200	1800	286T	TEBC	**IDM4102T**	13,548	VS2	36.48	455	93	230/460	26	2, 8, 45, 70,106
25	1800	2700	284TC	TEFC	**IDVSM4103T**	7,987	VS3	30.42	446	93.6	230/460	30	2, 48
			286T	TEBC	**IDM4103T**	7,518	VS2	36.48	417	93.6	230/460	30	2, 8, 45, 70,106
	1200	1800	324T	TEBC	**IDM4111T**	15,440	VS2	39.24	557	93	230/460	32	2, 8, 45, 70,106
30	1800	2700	286TC	TEFC	**IDVSM4104T**	8,726	VS3	30.42	457	94.1	230/460	36	2, 48
			286T	TEBC	**IDM4104T**	8,624	VS2	36.48	464	93.6	230/460	38	2, 8, 45, 70,106
	1200	1800	326T	TEBC	**IDM4117T**	17,185	VS2	39.24	628	93	230/460	39	2, 8, 45, 70,106
40	1800	2700	324T	TEFC	**IDVSM4110T**	10,066	VS3	30.44	619	94.1	230/460	50	2, 48
			324T	TEBC	**IDM4110T**	11,661	VS2	39.24	605	94.5	230/460	47	2, 8, 45, 70,106
50	1800	2700	326T	TEFC	**IDVSM4115T**	12,303	VS3	30.28	670	94.5	230/460	60	2, 48
			326T	TEBC	**IDM4115T**	13,087	VS2	39.24	622	94.5	230/460	57	2, 8, 45, 70,106
60	1800	2700	364T	TEFC	**IDVSM4314T**	15,239	VS3	33.44	869	94.2	230/460	71.2	2, 48
75	1800	2700	365T	TEFC	**IDVSM4316T**	19,087	VS3	33.44	873	94.3	230/460	89.2	2, 48
100	1800	2700	405T	TEFC	**IDVSM4400T-4**	24,667	VS3	38.31	1218	94.1	460	115	2, 48
125	1800	2700	444T	TEFC	**IDVSM4410T-4**	30,620	VS3	44.62	1637	94.1	460	150	2, 48
150	1800	2700	445T	TEFC	**IDVSM4406T-4**	36,542	VS3	44.62	1789	95	460	177	2, 48
200	1800	2700	447T	TEFC	**IDVSM4407T-4**	43,298	VS3	48.40	2189	95.4	460	226	2, 48
250	1800	2700	449T	TEFC	**IDVSM4408T-4**	61,195	VS3	53.40	2511	95.8	460	277	2, 48
300	1800	2700	449T	TEFC	**IDVSM44304T-4**	61,195	VS3	53.40	2816	96.2	460	338	2, 48

(a) See notes on inside back flap.
Cast iron frame
Continuous constant torque to zero speed

V*S Master Vector Duty, three phase, totally enclosed

1/2 thru 300 Hp

Features:

- TENV & TEFC, 1000:1CT without blower
- HS35 Encoder, 1024 PPR unless Note 107 (HS25) is indicated below
- 3 thermostats, one per phase
- Standard NEMA frame sizes

Applications:

- Extruders, conveyors, crane and hoist, winders
- Web processing, process control, test stands
- Centrifugal pumps and fans

Hp	Base Speed RPM	C.H. Speed RPM	NEMA Frame	Enclosure	Catalog Number	List Price	Disc. Sym.	"C" Dim.	Aprx. Wt. (lb)	Full Load Efficiency	Voltage	Full Load Amps	Notes (a)
1/2	1800	2700	56C	TENV	**ZDVSNM3538**	3,272	VS4	13.84	37	84	230/460	0.9	2, 46, 48, 107
3/4	1800	2700	56C	TENV	**ZDVSNM3542**	3,372	VS4	13.84	38	82.5	230/460	1.1	2, 46, 48, 107
1	1800	2700	145TC	TENV	**ZDVSNM3581T**	4,400	VS4	14.65	59	85.5	230/460	1.5	2, 46, 48, 107
			143TC	TEBC	**ZDM3581T**	5,042	VS2	19.02	66	87.5	230/460	1.5	2, 8, 46, 60, 106, 107
			143TC	TEBC	**ZDM3581T-5**	5,042	VS2	19.02	65	85.5	575	1.2	2, 8, 46, 106, 107
			143TC	TENV	**ZDNM3581T**	4,400	VS4	14.65	59	85.5	230/460	1.5	2, 8, 46, 106, 107
	1200	1800	143TC	TEBC	**ZDM3582T**	5,506	VS2	19.02	62	82.5	230/460	1.8	2, 8, 46, 106, 107
1 1/2	1800	2700	145TC	TENV	**ZDVSNM3584T**	4,605	VS4	14.65	70	86.5	230/460	2.1	2, 46, 48, 107
			145TC	TEBC	**ZDM3584T**	5,197	VS2	19.02	70	88.5	230/460	2.1	2, 8, 46, 60, 106, 107
			145TC	TEBC	**ZDM3584T-5**	5,197	VS2	19.02	62	87.5	575	1.7	2, 8, 46, 106, 107
			145TC	TENV	**ZDNM3584T**	4,605	VS4	14.65	58	84	230/460	2.3	2, 8, 46, 106, 107
	1200	1800	182TC	TEBC	**ZDM3667T**	5,896	VS2	21.71	99	87.5	230/460	2.5	2, 8, 46, 106, 107
2	1800	2700	145TC	TENV	**ZDVSNM3587T**	5,078	VS4	14.65	66	86.5	230/460	2.8	2, 46, 48, 107
			145TC	TEBC	**ZDM3587T**	5,389	VS2	19.02	75	88.5	230/460	2.8	2, 8, 46, 106, 107
			145TC	TEBC	**ZDM3587T-5**	5,389	VS2	19.02	74	88.5	575	2.3	2, 8, 46, 106, 107
			182TC	TENV	**ZDNM3669T**	5,078	VS4	17.21	95	84	230/460	2.9	2, 8, 46, 60, 106, 107
	1200	1800	184TC	TEBC	**ZDM3664T**	5,994	VS2	21.71	113	88.5	230/460	3.2	2, 8, 46, 106, 107
3	1800	2700	182TC	TEFC	**ZDVSM3661T**	5,374	VS3	20.23	118	89.5	230/460	4.1	2, 46, 48
			182TC	TENV	**ZDVSNM3661T**	5,448	VS4	17.85	111	89.5	230/460	4.3	2, 46, 48
			182TC	TEBC	**ZDM3661T**	6,227	VS2	21.71	112	89.5	230/460	4.1	2, 8, 46, 106, 107
			182TC	TEBC	**ZDM3661T-5**	6,227	VS2	21.71	110	89.5	575	3.2	2, 8, 46, 106, 107
			184TC	TENV	**ZDNM3661T**	5,427	VS4	17.21	104	88.5	230/460	4.2	2, 8, 46, 60, 106, 107
	1200	1800	213TC	TEBC	**ZDM3764T**	7,102	VS2	29.14	187	90.2	230/460	4.5	2, 8, 46, 70, 106, 107
5	1800	2700	184TC	TEFC	**ZDVSM3665T**	5,780	VS3	20.23	129	89.5	230/460	6.6	2, 46, 48
			184TC	TENV	**ZDVSNM3665T**	5,865	VS4	17.85	124	89.5	230/460	6.6	2, 46, 48
			184TC	TEBC	**ZDM3665T**	6,448	VS2	21.71	125	90.2	230/460	6.5	2, 8, 46, 106, 107
			184TC	TEBC	**ZDM3665T-5**	6,448	VS2	21.71	125	90.2	575	5.2	2, 8, 46, 106, 107
			213TC	TENV	**ZDNM3767T**	6,165	VS4	20.40	173	91	230/460	6.7	2, 8, 46, 60, 106, 107
	1200	1800	215TC	TEBC	**ZDM3768T**	8,163	VS2	29.14	226	90.2	230/460	7.3	2, 8, 46, 70, 106, 107
7 1/2	1800	2700	213TC	TEFC	**ZDVSM3770T**	6,632	VS3	24.59	184	91.7	230/460	9.5	2, 46, 48
			215TC	TENV	**ZDVSNM2237T**	6,739	VS4	20.86	211	91.7	230/460	10.1	2, 46, 48
			213TC	TEBC	**ZDM3770T**	7,283	VS2	29.14	170	91.7	230/460	9.5	2, 8, 46, 70, 106, 107
			213TC	TEBC	**ZDM3770T-5**	7,283	VS2	30.07	170	91.7	575	7.5	2, 8, 46, 70, 106, 107
			256TC	TENV	**ZDNM2237T**	7,089	VS4	24.05	242	90.2	230/460	9.1	2, 8, 46, 60, 106
	1200	1800	254TC	TEBC	**ZDM2276T**	10,691	VS2	33.07	333	91	230/460	10.7	2, 8, 46, 70, 106
10	1800	2700	215TC	TEFC	**ZDVSM3774T**	7,795	VS3	24.59	210	92.4	230/460	12.5	2, 46, 48
			254TC	TENV	**ZDVSNM2238T**	8,203	VS4	24.05	325	91.7	230/460	13	2, 46, 48
			215TC	TEBC	**ZDM3774T**	7,632	VS2	29.14	231	92.4	230/460	12.5	2, 8, 46, 70,106
			215TC	TEBC	**ZDM3774T-5**	7,632	VS2	30.07	231	92.4	575	10	2, 8, 46, 70, 106, 107
			256TC	TENV	**ZDNM2238T**	8,203	VS4	24.05	284	91.7	230/460	13	2, 8, 46, 60, 106, 107
	1200	1800	256TC	TEBC	**ZDM2332T**	12,531	VS2	33.07	356	91.7	230/460	14.2	2, 8, 46, 70, 106

(a) See notes on inside back flap.

Cast iron frame

Continuous constant torque to zero speed

V*S Master Vector Duty, three phase, totally enclosed (continued)

Hp	Base Speed RPM	C.H. Speed RPM	NEMA Frame	Enclosure	Catalog Number	List Price	Disc. Sym.	"C" Dim.	Aprx. Wt. (lb)	Full Load Efficiency	Voltage	Full Load Amps	Notes (a)
15	1800	2700	254TC	TEFC	**ZDVSM2333T**	8,610	VS3	26.83	295	92.4	230/460	18	2, 46, 48
			256TC	TENV	**ZDVSNM2333T**	9,297	VS4	24.05	348	93.6	230/460	18.5	2, 46, 48
			256TC	TEBC	**ZDM2333T**	8,091	VS2	33.07	317	92.4	230/460	18.1	2, 8, 46, 70, 106
			256TC	TEBC	**ZDM2333T-5**	8,091	VS2	34.15	289	92.4	575	14.5	2, 8, 46, 70, 106
			254TC	TENV	**ZDNM2333T**	9,297	VS4	24.05	286	92.4	230/460	18.5	2, 8, 46, 60, 106
	1200	1800	284T	TEBC	**ZDM4100T**	14,414	VS2	36.48	445	93	230/460	19.7	2, 8, 45, 46, 70, 106
20	1800	2700	256TC	TEFC	**ZDVSM2334T**	9,098	VS3	26.83	317	93	230/460	24	2, 46, 48
			256TC	TEBC	**ZDM2334T**	8,482	VS2	33.07	342	93	230/460	24	2, 8, 46, 70, 106
			256TC	TEBC	**ZDM2334T-5**	8,482	VS2	34.15	340	93	575	19	2, 8, 46, 70, 106
			284T	TENV	**ZDNM2334T**	9,390	VS4	27.36	405	94.5	230/460	25.5	2, 8, 45, 46, 60, 106
	1200	1800	286T	TEBC	**ZDM4102T**	15,934	VS2	36.48	462	93	230/460	26	2, 8, 45, 46, 70, 106
25	1800	2700	284TC	TEFC	**ZDVSM4103T**	10,794	VS3	30.42	458	93.6	230/460	30	2, 46, 48
			284T	TEBC	**ZDM4103T**	9,898	VS2	36.48	416	93.6	230/460	30	2, 8, 45, 46, 70, 106
	1200	1800	324T	TEBC	**ZDM4111T**	17,826	VS2	38.92	615	93	230/460	32	2, 8, 45, 46, 70, 106
30	1800	2700	286TC	TEFC	**ZDVSM4104T**	11,533	VS3	30.42	472	94.1	230/460	36	2, 46, 48
			286T	TEBC	**ZDM4104T**	11,009	VS2	36.48	445	93.6	230/460	38	2, 8, 45, 46, 70, 106
	1200	1800	326T	TEBC	**ZDM4117T**	19,567	VS2	38.92	624	93	230/460	39	2, 8, 45, 46, 70, 106
40	1800	2700	324T	TEFC	**ZDVSM4110T**	12,874	VS3	33.14	716	94.1	230/460	50	2, 46, 48
			324T	TEBC	**ZDM4110T**	14,042	VS2	38.92	610	94.5	230/460	47	2, 8, 45, 46, 70, 106
50	1800	2700	326T	TEFC	**ZDVSM4115T**	15,110	VS3	33.14	721	94.5	230/460	60	2, 46, 48
			326T	TEBC	**ZDM4115T**	15,471	VS2	38.92	631	94.5	230/460	57	2, 8, 45, 46, 70, 106
60	1800	2700	364T	TEFC	**ZDVSM4314T**	18,047	VS3	33.44	907	94.2	230/460	71.2	2, 46, 48
75	1800	2700	365T	TEFC	**ZDVSM4316T**	21,895	VS3	33.44	944	94.3	230/460	89.2	2, 46, 48
100	1800	2700	405T	TEFC	**ZDVSM4400T-4**	27,476	VS3	38.31	1230	94.1	460	115	2, 46, 48
125	1800	2700	444T	TEFC	**ZDVSM4410T-4**	33,426	VS3	49.07	1667	94.1	460	150	2, 46, 48
150	1800	2700	445T	TEFC	**ZDVSM4406T-4**	39,349	VS3	49.07	1806	95	460	177	2, 46, 48
200	1800	2700	447T	TEFC	**ZDVSM4407T-4**	46,106	VS3	52.36	2203	95.4	460	226	2, 46, 48
250	1800	2700	449T	TEFC	**ZDVSM4408T-4**	64,003	VS3	57.56	2550	95.8	460	277	2, 46, 48
300	1800	2700	449T	TEFC	**ZDVSM44304T-4**	64,003	VS3	57.56	2817	96.2	460	338	2, 46, 48

(a) See notes on inside back flap.
Cast iron frame
Continuous constant torque to zero speed

V*S Master severe duty vector drive, three phase, totally enclosed

1 thru 50 Hp

Features:

- Designed for harsh, severe duty environments
- TENV & TEFC, 1000:1CT without blower
- HS25 encoder (1 to 2 Hp) or HSD38 encoder (3 Hp and up), 1024 PPR
- 3 thermostats, one per phase
- Standard NEMA frame sizes

Applications:

- Extruders, conveyors, crane and hoist, winders
- Web processing, process control, test stands
- Centrifugal pumps and fans

Hp	Base Speed RPM	C.H. Speed RPM	NEMA Frame	Enclosure	Catalog Number	List Price	Disc. Sym.	"C" Dim.	Aprx. Wt. (lb)	Full Load Efficiency	Voltage	Full Load Amps	Notes (a)
1	1800	2700	143TC	TENV	**ZDVSNCP3581T**	4,620	VS4	14.61	65	87.5	230/460	1.5	2, 46, 48
1 1/2	1800	2700	145TC	TENV	**ZDVSNCP3584T**	4,826	VS4	14.61	72	86.5	230/460	2.1	2, 46, 48
2	1800	2700	145TC	TENV	**ZDVSNCP3587T**	5,299	VS4	14.61	73	86.5	230/460	2.8	2, 46, 48
3	1800	2700	182TC	TEFC	**ZDVSCP3661T**	5,978	VS3	20.23	135	89.5	230/460	4.1	2, 46, 48
5	1800	2700	184TC	TEFC	**ZDVSCP3665T**	6,486	VS3	20.23	128	89.5	230/460	6.6	2, 46, 48
7 1/2	1800	2700	213TC	TEFC	**ZDVSCP3770T**	7,514	VS3	24.58	201	91.7	230/460	9.5	2, 46, 48
10	1800	2700	215TC	TEFC	**ZDVSCP3774T**	8,223	VS3	24.58	218	92.4	230/460	12.5	2, 46, 48
15	1800	2700	254TC	TEFC	**ZDVSCP2333T**	9,837	VS3	28.14	374	92.4	230/460	18	2, 46, 48
20	1800	2700	256TC	TEFC	**ZDVSCP2334T**	10,447	VS3	28.14	388	93	230/460	24	2, 46, 48
25	1800	2700	284TC	TEFC	**ZDVSCP4103T**	12,497	VS3	30.79	481	93.6	230/460	30	2, 46, 48
30	1800	2700	286TC	TEFC	**ZDVSCP4104T**	13,420	VS3	30.79	494	94.1	230/460	36	2, 46, 48
40	1800	2700	324T	TEFC	**ZDVSCP4110T**	15,391	VS3	33.14	762	94.1	230/460	50	2, 46, 48
50	1800	2700	326T	TEFC	**ZDVSCP4115T**	18,187	VS3	33.14	757	94.5	230/460	60	2, 46, 48

(a) See notes on inside back flap.

Continuous constant torque to zero speed

Cast iron frame

V*S Master encoder feedback kits for IDVSM and IDVSNM motors

Encoder kits below feature 1024 pulses per revolution unless otherwise noted in the encoder type column. Connector styles include the MS twist lock (MS-TL), military style 10 pin screw tight (MS-ST), and the EPIC latch style (EPIC). HS35, RAHS35M and HSD35 feature hollow shaft mounting. Encoder kits include the encoder and all mounting hardware. IDVSM & IDVSNM kits include the mating connector.

Catalog Number	Motor Enclosure	Type	PPR	Frame Size	Mfg.	Magnetic or Optical	Connector Type	Input Voltage VDC	List Price	Disc. Sym.	Ap'x. Shpg. Wgt.
K99G72	TENV	HS35	1024	180T-250T	BEI	O	MS-ST	5-15	1,751	SVC	6
K99G74	TENV	HS35-2048	2048	180T-250T	BEI	O	MS-ST	5-15	1,751	SVC	6
K99G76	TENV	HS35	1024	180T-250T	BEI	O	MS-ST	5-24	1,751	SVC	6
K99G70	TENV	RAHS35M	1024	180T-250T	Avtron	M	MS-ST	5-24	1,751	SVC	9
K99G82	TENV	HS35R	1024	180T-250T	Dynapar	O	MS-TL	5-26	2,652	SVC	6
K99G78	TENV	HSD35	1024	180T-250T	Northstar	O	EPIC	5-26	1,970	SVC	8
K99G80	TENV	HS35	1024	180T-250T	BEI	O	MS-TL	5-28	1,751	SVC	6
K99G73	TEFC	HS35	1024	180T-440T	BEI	O	MS-ST	5-15	1,751	SVC	6
K99G75	TEFC	HS35-2048	2048	180T-440T	BEI	O	MS-ST	5-24	1,751	SVC	6
K99G77	TEFC	HS35	1024	180T-440T	BEI	O	MS-ST	5-24	1,751	SVC	6
K99G71	TEFC	RAHS35M	1024	180T-440T	Avtron	M	MS-ST	5-24	1,751	SVC	9
K99G83	TEFC	HS35R	1024	180T-440T	Dynapar	O	MS-TL	5-26	2,652	SVC	6
K99G79	TEFC	HSD35	1024	180T-440T	Northstar	O	EPIC	5-26	1,970	SVC	8
K99G81	TEFC	HS35	1024	180T-440T	BEI	O	MS-TL	5-28	1,751	SVC	6

Note: For 56 and 140 IDVSNM frame sizes use the kits from the IDM product table.

Feedback cable assembly with MS connector

Features:

- Cables with MS twist lock connectors
- Various lengths
- Twisted pair shielded for electrical noise protection

Applications:

- For any MS twist lock encoder connector
- AC or DC motor applications

Catalog Number	Cable Extension Length	List Price	Disc. Sym.	Ap'x Shpg. Wgt.
CBL015ZD-2	5 Ft = 1.5 Meters	240	SVC	1
CBL030ZD-2	10 Ft = 3 Meters	279	SVC	1
CBL046ZD-2	15 Ft = 4.6 Meters	319	SVC	2
CBL061ZD-2	20 Ft = 6.1 Meters	353	SVC	2
CBL091ZD-2	30 Ft = 9.1 Meters	431	SVC	3
CBL152ZD-2	50 Ft = 15.2 Meters	579	SVC	6
CBL229ZD-2	75 Ft = 22.9 Meters	768	SVC	8
CBL305ZD-2	100 Ft = 30.5 Meters	956	SVC	8
CBL455ZD-2	150 Ft = 45.5 Meters	1,242	SVC	15
CBL606ZD-2	200 Ft = 60.6 Meters	1,709	SVC	16

Connector transition (patch) cables

MS Twist Lock (MS-TL) to MS Screw Tight (MS-ST)
MS Screw Tight (MS-ST) to MS Twist Lock (MS-TL)

Features:

- Transition from MS twist-lock (female) to MS screw- tight (male)
- Transition from MS screw-tight (female) to MS twist-lock (male)
- 10 pin connector style

Applications:

- MS-ST to MS-TL compatible with stock cable lengths up to 200 feet

Catalog Number	Type	List Price	Disc. Sym.	Ap'x Shpg. Wgt.
CBLTL2ST	MS-TL to MS-ST	486	SVC	2
CBLST2TL	MS-ST to MS-TL	486	SVC	2

Encoder feedback kits for IDM, IDNM and IDWNM motors

ENC00NV-B1

ENC02BC-B2

Does not fit some legacy 180-440 EM, CP or ECP motors. Contact your local sales office.

Features:

- 1024 Encoder with MS twist lock connector
- HS35, HS35M, HS35R and HS25

Applications:

- For IDM, IDNM and IDWNM motors

Catalog Number	Type Enclosure	Description	Magnetic or Optical	Connector Type	Input Voltage	Output Voltage Limited	NEMA Frame	List Price	Disc. Sym.	Ap'x. Shpg. Wgt.
ENC00NV-A2	TENV	HS35M Avtron	Magnetic	TL	5-24 VDC	24	213T-215T	1,751	SVC	1
ENC00NV-B1	TENV	HS25 BEI	Optical	TL	5-15 VDC	15	56-215T	1,751	SVC	2
ENC00NV-D2	TENV	HS35R Dynapar	Optical	TL	5-26 VDC	26	56-215T	2,621	SVC	4
ENC00NV-D1 (1)	TENV	HS35 Dynapar	Optical	TL	5-24 VDC	5	56-215T	1,970	SVC	4
ENC01BC-B1	TEBC	HS25 BEI	Optical	TL	5-15 VDC	15	143T-215T	1,751	SVC	3
ENC01BC-D2	TEBC	HS35R Dynapar	Optical	TL	5-26 VDC	26	56-215T	2,622	SVC	4
ENC01NV-A2	TENV	HS35M Avtron	Magnetic	TL	5-24 VDC	24	254T-256T	1,751	SVC	1
ENC01NV-B2	TENV	HS35 BEI	Optical	TL	5-15 VDC	15	254T-284T	1,751	SVC	2
ENC01NV-D2	TENV	HS35R Dynapar	Optical	TL	5-26 VDC	26	254T-256T	2,622	SVC	4
ENC02BC-A2	TEBC	HS35M Avtron	Magnetic	TL	5-24 VDC	24	254T-447T	2,713	SVC	1
ENC02BC-B2	TEBC	HS35 BEI	Optical	TL	5-15 VDC	15	254T-447T	1,981	SVC	2
ENC02BC-D2	TEBC	HS35R Dynapar	Optical	TL	5-26 VDC	26	254T-447T	1,970	SVC	4

Note: For 56 and 140 IDVSM frame sizes use the kits from the table above.
(1) Being phased out

Constant velocity blower cooling conversion kits

Does not fit some legacy 180-440 EM, CP or ECP motors.
Contact your local sales office.

Features:

- Convert TENV & TEFC to TEBC

Applications:

- Not suitable for some EM, CP or ECP motors

Voltage	Phase	NEMA Frame	Catalog Number	List Price	Disc. Sym.	Ap'x. Shpg. Wgt.
115	1	143TC-145TC	**BLWL05-L**	1,099	SVC	7
		182TC-184TC	**BLWL06-L**	1,276	SVC	8
		213TC-215TC	**BLWL07-L**	2,126	A8	21
		254TC-256TC	**BLWL09-L**	2,217	A8	28
		284TC-286TC	**BLWL10-L**	2,247	A8	35
		324TC-326TC	**BLWL12-L**	2,247	A8	46
		364TC-365TC	**BLWL14-L**	2,247	A8	55
230/380/460	3	213TC-215TC	**BLWM07-F**	1,409	A8	20
		254TC-256TC	**BLWM09-F**	1,525	A8	30
		284TC-286TC	**BLWM10-F**	1,761	A8	35
		324TC-326TC	**BLWM12-F**	1,761	A8	46
		364TC-365TC	**BLWM14-F**	2,900	A8	55
		404TC-405TC	**BLWM16-F**	3,371	A8	70
		444TC-447TC	**BLWM18-F**	3,517	A8	87

Note: Blower cooling conversion kits should be further selected by Baldor-Reliance® motor type as noted within the catalog number.
As an example: BLWM10-F fits a 310M type also built as a 324-326TC. Does not fit Athens-built 180-440 M, CP or ECP motors.

DC motors and controls

Available in round frame and unique laminated square frames, Baldor-Reliance® DC motors offer performance and reliability in tough applications. Round frame DC motors utilize permanent magnet technology optimizing the commutator, brushes, and inertia to assure the best performance possible. Wound field motors are designed with superior commutation through the speed range to ensure trouble-free operation and the insulation system is designed with extra margin of safety to eliminate performance-limiting hot spots.

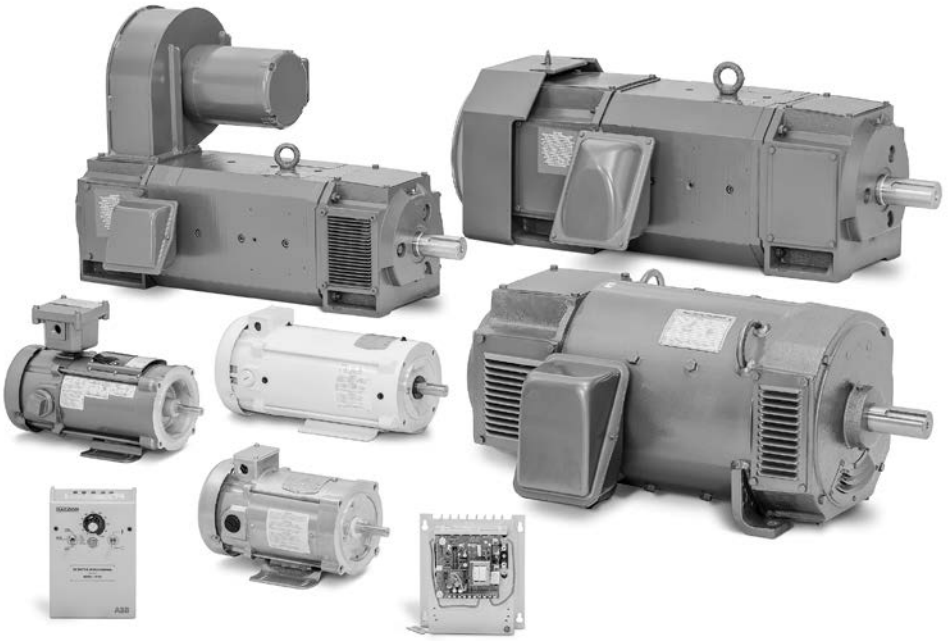

Key features:

- Designed specifically for rectified DC power operation

1/4 - 500 Horsepower

Product line – DPG-FV, TEFC, TENV, XP, SPG enclosures	Fractional Shunt DC	DC PM	SCR Round	RPM III
Frame sizes	56C - 1810ATC	56C - 1810ATC	L186ATC - 5011AT	DC189ATY - C4414ATZ
Electrical features				
High performance molded commutator construction	–	–	–	S
Reduced VOC emission resins and paints for a green environment	S	S	S	S
Extensive full load testing to ensure delivered reliability/performance	S	S	S	S
Low rotating assembly inertia for high dynamic performance	S	S	S	S
Explosion proof products for hazardous duty environments	S	S	–	S
Motors suitable for IEEE 45 shipboard applications	S	S	S	S
Wide voltage ranges – 12 volts DC to 600 volts DC	S	S	S	S
Mechanical features				
Laminated frame construction for superior commutation performance	–	–	–	S
Skewed armature construction with no cogging at low speeds	–	–	–	S
NEMA or IEC mounting for ease interchangability	–	–	–	S
Washdown products for food industry applications	S	S	–	–
Permanent magnet DC products with built in feedback devices	–	S	–	–
Versatile foot mounting for retrofitting non Baldor-Reliance® products	S	S	S	–

S = Standard

SCR drive fractional permanent magnet motor, TENV and TEFC, C-Face with base

1/4 thru 5 Hp

Features:

- NEMA C-Face with removable base
- Tachometer adaptable
- Class F insulation
- Double sealed bearings
- 20:1 constant torque speed range
- UL and CSA recognized

Applications:

- Conveyors
- Mixers
- Packaging machinery

Hp	Base Speed	NEMA Frame	Voltage D.C. Arm.	Full Load Amperage Arm.	Enclosure	Catalog Number	List Price	Disc. Sym.	Ap'x. Shpg. Wgt.	Reliance M/N	Notes (a)
1/4	1750	56C	90	2.5	TENV	**CDP3310**	1,179	PMS	24	TK3300	20,60
			180	1.25	TENV	**CDP3306**	1,179	PMS	23	TK3300	20,60
1/3	1750	56C	90	3.2	TENV	**CDP3320**	1,391	PMS	27	TK3300	20,60
			180	1.6	TENV	**CDP3316**	1,243	PMS	27	TK3300	20,60
1/2	1750	56C	90	4.8	TENV	**CDP3330**	1,391	PMS	32	TK3300	20,60
			180	2.5	TENV	**CDP3326**	1,391	PMS	31	TK3300	20,60
	2500	56C	90	5	TENV	**CDP3335**	1,243	PMS	26	TK3300	20,60
3/4	1750	56C	90	7.6	TEFC	**CDP3440**	1,689	PMS	38	TK3400	20
			180	3.7	TEFC	**CDP3436**	1,689	PMS	38	TK3400	20
	2500	56C	90	7.5	TEFC	**CDP3443**	1,495	PMS	36	TK3400	20
1	1750	56C	90	10	TEFC	**CDP3445**	2,055	PMS	44	TK3400	20
			180	5	TEFC	**CDP3455**	2,055	PMS	44	TK3400	20
	2500	56C	90	9.7	TEFC	**CDP3450**	1,689	PMS	38	TK3400	20
			180	4.85	TEFC	**CDP3460**	1,689	PMS	38	TK3400	20
1 1/2	1750	145TC	180	7.7	TEFC	**CDP3575**	3,784	PMS	65	TK3500	20
	2500	145TC	180	7	TEFC	**CDP3580**	3,293	PMS	53	TK3500	20
2	1750	145TC	180	9.6	TEFC	**CDP3585**	4,515	PMS	74	TK3500	20
	2500	145TC	180	10	TEFC	**CDP3590**	3,784	PMS	66	TK3500	8
3	1750	182TC	180	14	TEFC	**CDP3603**	5,561	PMS	112	TK3600PM	20
		182C	180	14	TEFC	**CDP3604**	5,530	PMS	112	TK3600PM	20
5	1750	1810ATC	180	21.6	TEFC	**CDP3605**	9,437	PMS	161	TK3600PM	20

Note: See Tach Generators and Mounting Kits.
(a) See notes on inside back flap.

Integral DC tach permanent magnet SCR drive motor – TENV and TEFC, C-Face with base

1/4 thru 5 Hp

Features:

- Precise speed regulation
- 50 VDC per 1,000 RPM precision tachometer
- Class F insulation
- 20:1 constant torque speed range with NEMA Type K control

Applications:

- Conveyors
- Metering pumps

Hp	Base Speed	NEMA Frame	Voltage D.C. Arm.	Full Load Amperage Arm.	Enclosure	Catalog Number	List Price	Disc. Sym.	Ap'x. Shpg. Wgt.	Notes (a)
1/4	1750	56C	90	2.5	TENV	**CDPT3310**	3,366	PMS	27	20,60
			180	1.25	TENV	**CDPT3306**	3,366	PMS	27	20,60
1/3	1750	56C	90	3.2	TENV	**CDPT3320**	3,433	PMS	30	20,60
			180	1.6	TENV	**CDPT3316**	3,433	PMS	30	20,60
1/2	1750	56C	90	4.8	TENV	**CDPT3330**	3,433	PMS	35	20,60
			180	2.5	TENV	**CDPT3326**	3,649	PMS	36	20,60
3/4	1750	56C	90	7.6	TEFC	**CDPT3440**	3,860	PMS	44	20
			180	3.7	TEFC	**CDPT3436**	3,860	PMS	45	20
1	1750	56C	90	10	TEFC	**CDPT3445**	4,306	PMS	50	20
			180	5	TEFC	**CDPT3455**	4,306	PMS	50	20
1 1/2	1750	143TC	180	7.7	TEFC	**CDPT3575**	5,976	PMS	71	20
2	1750	143TC	180	9.6	TEFC	**CDPT3585**	6,705	PMS	79	20
3	1750	182ATC	180	14	TEFC	**CDPT3603**	7,799	PMS	122	20
5	1750	1810ATC	180	24.5	TEFC	**CDPT3605**	11,667	PMS	164	20

(a) See notes on inside back flap.

Explosion proof permanent magnet SCR drive motor – TEFC, C-Face with base

1/4 thru 1 1/2 Hp

Features:

- NEMA C-Face with welded base
- 20:1 constant torque speed range
- UL and CSA
- Division 1, Class I, Group D; Class II, Group F&G, T3C
- Thermostat and explosion proof conduit box included
- Adjustable speed and constant torque for hazardous locations

Applications:

- Conveyors
- Feeders
- Pumps

Hp	Base Speed	NEMA Frame	Voltage D.C. Arm.	Full Load Amperage Arm.	Catalog Number	XP Cls/Grp	Temp Code	List Price	Disc. Sym.	Ap'x. Shpg. Wgt.	Notes (a)
1/4	1750	56C	90	2.7	**CDPX3410**	②	T3C	3,236	PMS	38	20
			180	1.3	**CDPX3406**	②	T3C	3,236	PMS	38	20
1/3	1750	56C	90	3.6	**CDPX3420**	②	T3C	4,064	PMS	43	20
			180	1.7	**CDPX3416**	②	T3C	4,064	PMS	44	20
1/2	1750	56C	90	5.2	**CDPX3430**	②	T3C	4,589	PMS	46	20
			180	2.5	**CDPX3426**	②	T3C	4,589	PMS	46	20
3/4	1750	56C	90	7	**CDPX3440**	②	T3C	5,673	PMS	51	20
			180	3.5	**CDPX3436**	②	T3C	5,673	PMS	51	20
1	1750	56C	90	9.6	**CDPX3545**	②	T3C	7,555	PMS	73	20
			180	4.9	**CDPX3555**	②	T3C	7,555	PMS	71	20
1 1/2	1750	145TC	180	7.1	**CDPX3575**	②	T3C	8,075	PMS	81	20

Notes: ② Class I, Group D; Class II, Group F&G (a) See notes on inside back flap

CAUTION: Explosion-proof motors have a tight fit between mating parts to ensure the integrity of the explosion-proof enclosure. This can lead to an accumulation of moisture inside the motors due to condensation. Care should be used when selecting an explosion-proof motor, especially when installed outdoors and on intermittent duty.

Washdown duty permanent magnet SCR drive motor – TENV and TEFC, C-Face with base

1/4 thru 5 Hp

Features:

- Moisture sealant on bolt heads between frame and endplates
- Neoprene gasketed conduit box
- Double sealed bearings
- Forsheda® running contact V-Ring slinger
- Stainless steel shaft
- Class F Insulation
- Tachometer adaptable
- Suitable for high pressure washdown

Applications:

- Food processing conveyors
- Feeders

Hp	Base Speed	NEMA Frame	Voltage D.C. Arm.	Full Load Amperage Arm.	Enclosure	Catalog Number	List Price	Disc. Sym.	Ap'x. Shpg. Wgt.	Notes (a)
1/4	1750	56C	90	2.5	TENV	**CDPWD3310**	1,526	PMS	25	20,60
			180	1.25	TENV	**CDPWD3306**	1,526	PMS	24	20,60
1/3	1750	56C	90	3.2	TENV	**CDPWD3320**	1,612	PMS	27	20,60
			180	1.6	TENV	**CDPWD3316**	1,612	PMS	27	20,60
1/2	1750	56C	90	4.8	TENV	**CDPWD3330**	1,813	PMS	32	20,60
			180	2.5	TENV	**CDPWD3326**	1,813	PMS	32	20,60
3/4	1750	56C	90	7.6	TEFC	**CDPWD3440**	2,187	PMS	38	20
			180	3.7	TEFC	**CDPWD3436**	2,187	PMS	38	20
1	1750	56C	90	10	TEFC	**CDPWD3445**	2,668	PMS	44	20
			180	5	TEFC	**CDPWD3455**	2,668	PMS	44	20
1 1/2	1750	145TC	180	7.7	TEFC	**CDPWD3575**	5,103	PMS	66	20
2	1750	145TC	180	9.6	TEFC	**CDPWD3585**	4,443	PMS	75	20
3	1750	182TC	180	14	TEFC	**CDPWD3603**	7,794	PMS	116	20
5	1750	1810ATC	180	24.5	TEFC	**CDPWD3605**	13,201	PMS	157	20

Note: See Tach Generators and Mounting kits.
(a) See notes on inside back flap.

Paint free washdown duty permanent magnet SCR drive motor, TEFC, C-Face with base

1/4 thru 1 Hp

Features:

- Class F insulation
- 20:1 constant torque speed range
- Moisture resistant 200°C magnet wire
- Sealed ball bearings with moisture resistant grease
- Contact lip seals on shaft extensions
- Neoprene gaskets
- 300 series stainless steel motor frame, base, shaft and hardware

Applications:

- Food processing
- Packaging

Hp	Base Speed	NEMA Frame	Voltage D.C. Arm.	Full Load Amperage Arm.	Catalog Number	List Price	Disc. Sym.	Ap'x. Shpg. Wgt.	Notes (a)
1/4	1750	56C	90	2.7	**CDPSWD3410**	1,828	PMS	29	20
			180	1.3	**CDPSWD3406**	1,828	PMS	28	20
1/2	1750	56C	90	5.2	**CDPSWD3430**	2,165	PMS	37	20
			180	2.5	**CDPSWD3426**	2,165	PMS	38	20
1	1750	56C	90	9.6	**CDPSWD3545**	3,199	PMS	63	20
			180	4.9	**CDPSWD3555**	3,199	PMS	63	20

(a) See notes on inside back flap.

Metric flange permanent magnet SCR drive motor, TENV and TEFC, Flange and face mount

0.18 thru 5 kW, 0.25 thru 3.7 Hp

Features:

- Metric flange or C-Face per IEC 60072-1 standards
- Bolt on non-metric base
- Class F insulation
- Tachometer adaptable (except 0.15 kW)
- 20:1 constant torque speed range
- Conforms to IEC 30034-1

Applications:

- Metric SCR drive motor replacement

kW/Hp	Base Speed	NEMA Frame	Voltage D.C. Arm	Full Load Amperage Arm	Enclosure	Catalog Number	List Price	Disc. Sym.	Ap'x. Shpg. Wgt.	Notes (a)
B5 flange										
.18/.25	1750	D71D	180	1.25	TENV	**VP3311D**	1,179	PMS	23	20,60
.25/.33	1750	D71D	180	1.6	TENV	**VP3316D**	1,243	PMS	27	20,60
.37/.5	1750	D71D	180	2.5	TENV	**VP3326D**	1,391	PMS	31	20,60
	3000	D71D	180	2.5	TEFC	**VP3428D**	1,442	PMS	33	20
.57/.75	1750	D80D	180	3.7	TEFC	**VP3436D**	1,689	PMS	40	20
	3000	D80D	180	3.6	TEFC	**VP3439D**	1,495	PMS	37	20
.75/1	1750	D80D	180	5	TEFC	**VP3455D**	2,055	PMS	46	20
	3000	D80D	180	5.1	TEFC	**VP3458D**	1,689	PMS	41	20
1.1/1.5	3000	D90D	180	7.7	TEFC	**VP3468D**	1,884	PMS	47	20
	1750	D90D	180	7.7	TEFC	**VP3575D**	3,807	PMS	71	20
1.5/2	1750	D90D	180	9.6	TEFC	**VP3585D**	4,542	PMS	78	20
	3000	D90D	180	10	TEFC	**VP3588D**	3,807	PMS	69	20
2.2/3	1750	D112D	180	14	TEFC	**VP3603D**	5,587	PMS	121	20
3.7/5	1750	D112D	180	24.5	TEFC	**VP3605D**	9,208	PMS	166	20
B14 face										
.18/.25	1750	D71C	180	1.4	TEFC	**VP3411-14**	1,326	PMS	30	20
.25/.33	1750	D71C	180	1.7	TEFC	**VP3416-14**	1,411	PMS	31	20
.37/.50	3000	D71C	180	2.5	TEFC	**VP3428-14**	1,442	PMS	31	20
	1750	D71C	180	2.5	TEFC	**VP3426-14**	1,442	PMS	37	20
.56/.75	3000	D80C	180	3.6	TEFC	**VP3439-14**	1,495	PMS	35	20
	1750	D80C	180	3.7	TEFC	**VP3436-14**	1,689	PMS	40	20
.75/1	3000	D80C	180	5.1	TEFC	**VP3458-14**	1,689	PMS	38	20
	1750	D80C	180	5	TEFC	**VP3455-14**	2,055	PMS	45	20
1.1/1.5	3000	D80C	180	7.7	TEFC	**VP3468-14**	1,834	PMS	43	20
	1750	D90C	180	7.7	TEFC	**VP3575-14**	3,807	PMS	73	20
1.5/2	3000	D90C	180	10	TEFC	**VP3588-14**	3,807	PMS	70	20
	1750	D90C	180	9.6	TEFC	**VP3585-14**	4,542	PMS	80	20

Notes: (a) See notes on inside back flap.
Above motors D71 and larger with B5 flange, fitted with oil seal.
See Tach Generators and Tach Mounting Kits.

Low voltage permanent magnet motor – TENV and TEFC

1/4 thru 1 Hp

Features:

- NEMA C-Face
- Class F insulation
- Double sealed ball bearings
- Top-mounted terminal studs for power connection on ratings 40-amps and up

Applications:

- Battery operation for portable pumps
- Fans
- Augers
- Winches
- Lifts

Hp	Base Speed	NEMA Frame	Voltage D.C.	Full Load Amperage	Enclosure	Catalog Number	List Price	Disc. Sym.	Ap'x. Shpg. Wgt.	Notes (a)
1/4	1800	56C	12	22.5	TENV	**CDP3410-V12**	1,268	PMS	23	20,60
			24	10.6	TENV	**CDP3410-V24**	1,202	PMS	23	20,60
1/3	1800	56C	12	28.6	TENV	**CDP3420-V12**	1,391	PMS	31	20,60
			24	13.6	TENV	**CDP3420-V24**	1,327	PMS	31	20,60
1/2	1800	56C	12	40	TENV	**CDP3430-V12**	1,442	PMS	37	20,60
			24	19.6	TENV	**CDP3430-V24**	1,375	PMS	35	20,60
3/4	1800	56C	12	66	TEFC	**CDP3440-V12**	2,070	PMS	42	20
		56C	24	29.4	TEFC	**CDP3440-V24**	2,058	PMS	41	20
1	1800	56C	12	85.6	TEFC	**CDP3445-V12**	2,994	PMS	45	20
			24	40.9	TEFC	**CDP3445-V24**	2,980	PMS	46	20

(a) See notes on inside back flap.
1/4 - 1/2 Hp are TENV. 3/4 - 1 Hp are TEFC.

DC power motor – TEFC – right base

1/3 thru 1 1/2 Hp

Features:

- 20% compound wound
- Weather proof, VPI insulation meets IEEE 45 specifications
- Suitable for mounting in any position
- Continuous duty
- Easy access brushes
- Powered from generators or batteries

Applications:

- Cranes and hoists
- Conveyors
- Augers
- Marine duty application

Hp	Speed	NEMA Frame	Rated Current	Catalog Number	List Price	Disc. Sym.	Ap'x. Shpg. Wgt.	Notes (a)
115 VDC								
1/3	1750	56	3.2	**D1151**	2,813	WFS	23	20
1/2	1750	56	4.8	**D1152**	2,890	WFS	29	20
3/4	1750	56	6.6	**D1153**	3,402	WFS	34	20
1	1750	56	8	**D1154**	3,911	WFS	62	20
230 VDC								
1/3	1750	56	1.7	**D2301**	2,813	WFS	41	20
1/2	1750	56	2.1	**D2302**	2,890	WFS	29	20
3/4	1750	56	3.3	**D2303**	3,402	WFS	34	20
1	1750	56	4	**D2304**	3,911	WFS	62	20
1 1/2	1750	184	6.1	**D2305**	6,651	WFS	84	20

Notes: (a) See notes on inside back flap.
Not for SCR control applications. Base welded on 3513D type only. Not tach adaptable.

Shunt wound SCR drive motors, TEFC, C-Face with base

1/4 thru 3 Hp

Features:

- Designed for use with NEMA Type K SCR control
- 20:1 constant torque speed range
- NEMA C-Face and removable base
- NEMA 182 frame and larger – normally closed thermostat on field winding
- Class F insulation
- 1.0 SF

Applications:

- Conveyors
- Printing and textile equipment
- Machine tools

Hp	Base Speed	NEMA Frame	Voltage D.C. Arm.	Voltage D.C. Field	Full Load Amperage Arm.	Full Load Amperage Field	Catalog Number	List Price	Disc. Sym.	Ap'x. Shpg. Wgt.	Notes (a)
1/4	1750	56C	90	100/50	3	.3/.6	**CD3425**	1,186	WFS	23	20
1/3	1750	56C	90	100/50	3.4	.4/.8	**CD3433**	1,296	WFS	24	20
			180	200/100	1.9	.21/.42	**CD3434**	1,296	WFS	24	20
			90	100/50	3.7	.5/1	**CD5333 (b)**	1,869	WFS	31	20
1/2	1750	56C	90	100/50	5.2	.5/1	**CD3450**	1,474	WFS	29	20
			180	200/100	2.6	.25/.5	**CD3451**	1,474	WFS	29	20
			90	100/50	5	.44/.88	**CD5350 (b)**	2,063	WFS	38	20
3/4	1750	56C	90	100/50	7.8	.6/1.2	**CD3475**	1,833	WFS	34	20
			180	200/100	3.9	.3/.6	**CD3476**	1,833	WFS	34	20
			90	100/50	8	.6/1.2	**CD5375 (b)**	2,429	WFS	45	20
1	1750	56C	180	200/100	5	.3/.6	**CD5318 (b)**	2,587	WFS	54	20
			90	100/50	10	.6/1.2	**CD5319 (b)**	2,587	WFS	53	20
		182C	180	200/100	5	.25/.5	**CD6218**	3,456	WFS	65	20
			90	100/50	9.6	.55/1.1	**CD6219**	3,456	WFS	66	20
1 1/2	1750	182C	180	200/100	7.5	.25/.5	**CD6215**	3,870	WFS	84	20
2	1750	182C	180	200/100	9.5	.4/.8	**CD6202**	4,576	WFS	98	20
		213C	180	200/100	9.5	.4/.8	**CD7502**	8,031	WFS	105	20
3	1750	184TC	180	200/100	14.7	.6/1.2	**CD6203**	5,197	WFS	135	8, 73
		215C	180	200/100	14.7	.6/1.2	**CD7503**	8,541	WFS	137	20

Notes: See Tach Generators and Mounting Kits
(a) See notes on inside back flap
(b) No dual mounting base holes on 35D, 75D or 91D type.

Shunt wound SCR drive motors, explosion proof, TEFC, C-Face with base

1/2 thru 2 Hp

Features:

- Designed for use with NEMA type K SCR control
- 20:1 constant torque speed range
- NEMA C-Face and removable base
- Normally closed thermostat on field winding
- Class F insulation
- 1.0 SF
- UL and CSA Division 1, Class I, Group D, Class II, Group F&G

Applications:

- Conveyors
- Printing and textile equipment

Hp	Base Speed	NEMA Frame	Voltage D.C. Arm.	Voltage D.C. Field	Full Load Amperage Arm.	Full Load Amperage Field	Catalog Number	XP Cls/Grp	Temp Code	List Price	Disc. Sym.	Ap'x. Shpg. Wgt.	Notes (a)
Explosion-proof – continuous duty – Division 1, Class I, Group D & Class II, Group F & G - 1.0 S.F.													
1/2	1750	182CZ	90	100/50	4.9	.55/1.1	**CDX1850 (b)**	②	T3B	4,696	WFS	100	2
3/4	1750	182CZ	90	100/50	7	.55/1.1	**CDX1875 (b)**	②	T3B	6,218	WFS	100	2
1	1750	182CZ	180	200/100	5	.25/.5	**CDX2001 (b)**	②	T3B	7,734	WFS	102	2
		182C	180	200/100	5	.25/.5	**CDX7100**	②	T3B	6,420	WFS	102	2
1 1/2	1750	182C	180	200/100	7.5	.25/.5	**CDX7150**	②	T3B	8,502	WFS	121	2
2	1750	182C	180	200/100	9.5	.4/.8	**CDX7200 (b)**	②	T3B	9,547	WFS	135	2

Notes: (a) See notes on inside back flap
(b) Refers to shaft and/or face mounting dimensions only. Base mounting dimensions and shaft height differ from NEMA frames shown. Go to www.baldor.abb.com for details.
② Class I, Group D; Class II, Group F&G
Caution: Explosion-proof motors have a tight fit between mating parts to ensure the integrity of the explosion-proof enclosure. This can lead to an accumulation of moisture inside the motors due to condensation.
Care should be used when selecting an explosion-proof motor, especially when installed outdoors and on intermittent duty.

RPM III DC shunt wound SCR drive motors, 180V armature, power code K

1.5 thru 5 Hp

Features:

- Unique laminated square frame for improved commutation
- Square configuration allows for increased rating per frame size
- Class F insulation system
- Service line brushes with convenient wear indicating reference lines
- PLS™ for longer bearing and motor life
- F3 mounting
- Tachometer adaptable with thermostat

Applications:

- Metals
- Paper
- Web processes
- Extruders and packaging
- Machine tools

Hp	Base Speed	NEMA Frame	Voltage D.C. Arm.	Voltage D.C. Field	Full Load Amperage Arm.	Full Load Amperage Field (a)(b)	Enclosure	Catalog Number	List Price	Disc. Sym.	Ap'x. Shpg. Wgt.	Reliance M/N	Field Type	XPY Tach Kit
1 1/2	1750	DC189ATY (c)	180	100/200	7.2	0.72	TENV	**D1815R**	14,061	R3B	169	T18R1119	STR	413336-1R
2	1750	DC189ATY (c)	180	100/200	9.5	0.72	TENV	**D1802R**	14,534	R3B	86	T18R1117	STR	413336-1R
3	1750	DC1811ATCZ (d)	180	100/200	14.1	1.17	TENV	**CD1803R**	15,665	R3B	212	T18R1102	STR	413336-1R
		DC189ATY (c)(e)	180	100/200	14.8	0.95	DPG	**D1803R**	15,837	R3B	165	T18R1118	STR	413336-1R
		DC189ATCZ (d)(e)	180	100/200	14.8	0.95	DPG	**CDD1803R**	16,117	R3B	160	T18R1120	STR	413336-1R
5	1750	DC1810ATCZ (d)(e)	180	100/200	24	1.68	DPG	**CD1805R**	17,536	R3B	175	T18R1105	STR	413336-1R
		DC2112ATCZ (d)	180	100/200	23	1.34	TENV	**CD2105R**	22,253	R3B	355	T21S1101	STR	413336-1R

Notes: Encoder and tachometer kits available
(a) Field amps at 25°C
(b) Field amps for high voltage connection
(c) 140TC C-Face
(d) 180TC C-Face
(e) Top mounted conduit box, if blower added, blower must be mounted F-1 or F-2.

RPM III DC shunt wound SCR drive motors, 240V armature, 240V field, power code C

3 thru 10 Hp

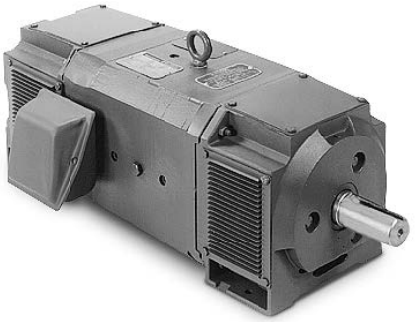

Features:

- Superior speed regulation
- Operation down to 25% of base speed at 67% load current
- Excellent load sharing characteristics on common drive
- Tachometer adaptable

Applications:

- Textile equipment
- Metals
- Paper
- Web Processes
- Extruders and packaging
- Machine tools

Hp	Base Speed	NEMA Frame	Voltage D.C. Arm.	Voltage D.C. Field	Full Load Amperage Arm.	Full Load Amperage Field (a)	Enclosure *	Catalog Number	List Price	Disc. Sym.	Ap'x. Shpg. Wgt.	Reliance M/N	Field Type	XPY Tach Kit
3	1750/2300	C1811ATCZ (b)	240	240	11	0.99	SPG	**CD2003R-2**	18,561	R3B	198	T18R1009	STAB	413336-1R
5	1750/2300	C1811ATCZ (b)	240	240	18.1	1.11	SPG	**CD2005R-2**	18,759	R3B	209	T18R1010	STAB	413336-1R
7 1/2	1750/2300	C1812ATCZ (b)	240	240	27	1.4	SPG	**CD2007R-2**	18,947	R3B	235	T18R1011	STAB	413336-1R
10	1750/2300	SC2113ATCZ (c)	240	240	37	2.20	SPG	**D2010R-2**	23,383	R3B	346	T21S1001	STAB	417708-21

Notes: Encoder and tachometer kits available.
(a) Field amps at 25°C
(b) 180TC C-Face
(c) 210TC C-Face
* Splash-proof Guarded (SPG) is an open machine in which the ventilating openings are so constructed that successful operation is not interfered with when drops of liquid or solid particles strike or enter the enclosure at any angle not greater than 60 degrees downward from vertical

RPM III DC shunt wound SCR drive TEFC motors, 240V and 500V armature, power code C

5 thru 50 Hp

Features:

- Laminated square frame for improved commutation
- Class F insulation system
- Service line brushes with convenient wear indicating reference lines
- PLS™ bearing lubrication system for longer bearing and motor life
- Tachometer adaptable with thermostat

Applications:

- Textile range drives
- Roofing machines
- Tube mills

Hp	Base/Max Speed	NEMA Frame	Voltage D.C. Arm.	Voltage D.C. Field	Full Load Amperage Arm.	Full Load Amperage Field (a)(b)	Catalog Number	List Price	Disc. Sym.	Ap'x. Shpg. Wgt.	Notes (e)	Reliance M/N	Field Type	XPY Tach Kit
5	1750/2300	C1812ATZ	240	150	18.5	1.80	**D2505R**	19,622	R3B	251	87	T18R1005 (d)	STAB	417709-17
		SC2113ATZ	500	150/300	9	1.06	**D5505R**	21,794	R3B	340	87	T21S201 (c)	STAB	417708-21
7 1/2	1750/2300	SC2113ATZ	240	150	27	3.25	**D2507R**	23,490	R3B	359	87	T21S301	STAB	417709-65
		SC2113ATZ	500	150/300	13.5	1.41	**D5507R**	23,490	R3B	360	87	T21S302 (d)	STAB	417709-65
10	1750/2300	MC2113ATZ	240	150	35.5	3.13	**D2510R**	26,413	R3B	379	87	T21S303	STAB	417709-65
		MC2113ATZ	500	150/300	17.5	1.55	**D5510R**	26,413	R3B	405	87	T21S304	STAB	417709-65
15	1750/2300	SC2512ATZ	240	150	53.5	2.18	**D2515R**	31,862	R3B	560	6,87	T25S301	STAB	417709-66
		SC2512ATZ	500	150/300	25.6	1.71	**D5515R**	31,862	R3B	547	87	T25S302	STAB	417709-66
20	1750/2300	LC2512ATZ	240	150	71	4.14	**D2520R**	33,206	R3B	640	87	T25S303	STAB	417709-66
		LC2512ATZ	500	150/300	33	2.06	**D5520R**	33,206	R3B	640	87	T25S304	STAB	417709-66
25	1750/2300	MC2812ATZ	240	150	87	4.05	**D2525R**	38,598	R3B	805	87	T28S301	STAB	417709-67
		MC2812ATZ	500	150/300	41	2.23	**D5525R**	38,598	R3B	815	87	T28S302	STAB	417709-67
30	1750/2300	LC2812ATZ	500	150/300	50	1.74	**D5530R**	40,463	R3B	895	87	T28S303	STAB	417709-67
40	1750/2300	MC3212ATZ	500	150/300	65	1.82	**D5540R**	47,418	R3B	1120	87	T32S301	STAB	417709-68
50	1750/2300	LC3212ATZ	500	150/300	84	1.98	**D5550R**	50,175	R3B	1270	87	T32S302	STAB	417709-68

Notes: Encoder and tachometer available.
(a) Field amps at 25°C
(b) Field amps for high voltage connection
(c) TENV enclosure
(d) Power Code D
(e) See notes on inside back flap.

RPM III wound field SCR drive DPG-FV motors, 240V and 500V armature, power code C

10 thru 500 Hp

Features:

- Laminated square frame for improved commutation
- Class F insulation system
- Service line brushes with convenient wear indicating reference lines
- PLS™ bearing lubrication system for longer bearing and motor life
- Tachometer adaptable with thermostat

Applications:

- Metals
- Paper
- Web processes
- Extruders and packaging
- Machine tools

Hp	Base/Max Speed	NEMA Frame	Voltage D.C. Arm.	Voltage D.C. Field	Full Load Amperage Arm.	Full Load Amperage Field (a)(b)	Catalog Number	List Price	Disc. Sym.	Ap'x. Shpg. Wgt.	Notes (e)	Reliance M/N	Field Type	XPY Tach Kit
10	1750/2300	SC2113ATZ	500	300	18	1.11	**D5010RS-BV**	28,093	R3B	345 (c)	101,102	T21T1342	STAB	417708-21
15	1750/2300	SC2113ATZ	240	150	56	4.73	**D2015R-BV**	25,195	R3B	345 (d)	103	T21T1359	STR	417708-21
		SC2113ATCZ	240	150	56	4.73	**CD2015R-BV**	26,149	R3B	345 (b)	103	T21T1384	STR	417708-21
		SC2113ATZ	500	300	27	2.22	**D5015R-BV**	25,195	R3B	375	103	T21T1364	STR	417708-21
		SC2113ATZ	500	300	27	3.03	**D5015RS-BV**	32,040	R3B	345 (c)	101,102	T21T1346	STAB	417708-21
20	1750/2300	SC2113ATZ	240	150	76.5	7.12	**D2020R-BV**	25,797	R3B	345 (d)	103	T21T1363	STR	417708-21
		SC2113ATZ	500	300	37	3.03	**D5020R-BV**	25,797	R3B	390	103	T21T1350	STR	417708-21
		MC2113ATZ	500	300	37	2.24	**D5020RS-BV**	32,789	R3B	370 (c)	101,102	T21T1344	STAB	417708-21
25	1750/2300	MC2113ATZ	240	150	96	8.43	**D2025R-BV**	30,396	R3B	370 (d)	103	T21T1371	STR	417708-21
		MC2113ATZ	500	300	46	3.32	**D5025R-BV**	30,396	R3B	410	6,104	T21T1351	STR	417708-21
		LC2113ATZ	500	300	43	3.07	**D5025RS-BV**	34,002	R3B	472 (c)	101,102	T21T1345	STAB	417708-21
30	1750/2300	LC2113ATZ	240	150	109	10	**D2030R-BV**	31,070	R3B	400	103	T21T1375	STR	417708-21
		LC2113ATZ	500	300	52	3.3	**D5030R-BV**	31,070	R3B	445	103	T21T1352	STR	417708-21
		SC2512ATZ	500	300	51	2.84	**D5030RS-BV**	36,440	R3B	535 (c)	101,102	T25T1342	STAB	417708-21
	1150/1800	LC2115ATZ	500	300	54	3.95	**D5130R-BV**	33,894	R3B	480	104	T21T1378	STR	417708-21
40	1750/2300	LC2115ATZ	240	150	146	5.63	**D2040R-BV**	31,088	R3B	480	6,103	T21T1380	STR	417708-21
	1750/2100	MC2115ATZ	500	300	69	4.49	**D5040R-BV**	33,332	R3B	501	103	T21T2353	STR	417708-21
		MC2512ATZ	500	300	68.5	2.88	**D5040RS-BV**	39,524	R3B	570 (c)	6,101,102	T25T1344	STAB	417708-21
	1150/2000	LC2512ATZ	500	300	72	5.27	**D5140R-BV**	41,419	R3B	640	104	T25T1355	STR	417708-21
50	1750/2100	LC2115ATZ	500	300	87	3.95	**D5050R-BV**	36,041	R3B	520	103	T21T2354	STR	417708-21
		LC2512ATZ	500	300	84	3.38	**D5050RS-BV**	41,867	R3B	660 (c)	6,101,102	T25T1339	STAB	417708-21
	1150/1900	C2514ATZ	500	300	87	4.06	**D5150R-BV**	42,368	R3B	695	6,104	T25T1359	STR	417708-21
60	1750/2300	LC2512ATZ	500	300	102	4.61	**D5060R-BV**	38,880	R3B	610	103	T25T2348	STR	417708-21
	1750/2100	MC2812ATZ	500	300	100	3.43	**D5060RS-BV**	44,216	R3B	860 (c)	6,101,102	T28T1330	STAB	417708-26
	1150/1900	C2515ATZ	500	300	102	5.18	**D5160R-BV**	45,548	R3B	805	6,103	T25T1364	STR	417708-21
75	1750/2100	C2515ATZ	500	300	124	6.21	**D5075R-BV**	45,548	R3B	767	103	T25T2349	STR	417708-21
		MC3212ATZ	500	300	124	3.63	**D5075RS-1BV**	49,646	R3B	1210 (c)	6,101,102	T28T1327	STAB	417708-26
	1150/2000	MC3212ATZ	500	300	125	4.15	**D5175R-1BV**	46,323	R3B	1125	6,103	T28T1342	STR	417708-26
100	1750/2000	C2515ATZ	500	300	167	6.7	**D50100R-BV**	46,323	R3B	890	103	T25T2350	STR	417708-21
		MC3212ATZ	500	300	162	3.34	**D50100RS-BV**	51,155	R3B	1210 (c)	6,101,102	T32T1314	STAB	417708-26
	1150/1850	C3214ATZ	500	300	168	4.15	**D51100RB-1BV**	53,306	R3B	1475	6,104	T28T1344	STR	417708-26
125	1750/2000	C2813ATZ	500	300	204	6.93	**D50125R-BV**	46,323	R3B	997	6,103	T28T1333	STR	417708-26
		UC2813ATZ	500	300	204	6.93	**D50125UR-BV**	46,323	R3B	945	5,6,103	T28T1349	STR	417708-26
		LC3212ATZ	500	300	203	4.4	**D50125RS-BV**	52,709	R3B	1290 (c)	6,101,102	T32T1318	STAB	417708-26
	1150/2000	UC3214ATZ	500	300	204	8.37	**D51125RR-BV**	55,553	R3B	1475	5,6,103	T32T1327	STR	417708-26

Notes: Encoder and tachometer kits available. **Red** catalog number indicates **NEW** product.
(a) Field amps at 25°C
(b) 210TC C-Face
(c) Extruder duty enclosed commutator design
(d) Power Code D
(e) See notes on inside back flap.

RPM III wound field SCR drive DPG-FV motors, 240V and 500V armature, power code C

Hp	Base/Max Speed	NEMA Frame	Voltage D.C. Arm.	Voltage D.C. Field	Full Load Amperage Arm.	Full Load Amperage Field (a)(b)	Catalog Number	List Price	Disc. Sym.	Ap'x. Shpg. Wgt.	Notes (e)	Reliance M/N	Field Type	XPY Tach Kit
150	1750/2000	C2815ATZ	500	300	250	10.64	**D50150RE-BV**	48,187	R3B	1197	6, 103	T28T1352	STR	417708-26
		UC2815ATZ	500	300	250	10.64	**D50150URE-BV**	48,946	R3B	1197	5,6,103	T28T1351	STR	417708-26
		MC3612ATZ	500	300	240	4.81	**D50150RS-BV**	66,207	R3B	1630 (c)	6,105	T36S1313	STAB	417708-26
200	1750/2100	UC3214ATZ	500	300	322	8.37	**D50200RR-BV**	53,934	R3B	1475	5,6,103	T32T1322	STR	417708-26
	1750/2000	LC3612ATZ	500	300	321	5.41	**D50200RS-BV**	70,082	R3B	1905 (c)	6,105	T36S1314	STAB	417708-26
	1150/2000	MC4013ATZ	500	300	323	10.7	**D51200R-1BV**	97,301	R3B	1850	6,104	T36S1325	STR	417708-26
250	1750/2000	ULC3612ATZ	500	300	405	8.87	**D50250RR-BV**	65,105	R3B	1891	5,6,104	T36S1318	STR	417708-26
		C4011ATZ	500	300	400	6.63	**D50250RS-BV**	100,295	R3B	2310 (c)	6,105	T40S1306	STAB	417708-26
	1150/2000	MC4013ATZ	500	300	406	10.7	**D51250R-BV**	114,176	R3B	2735	6,104	T40S1317	STR	417708-26
300	1750/2000	LC3613ATZ	500	300	478	12.5	**D50300R-BV**	67,824	R3B	2190	6,104	T36S1319	STR	417708-26
	1750/2100	MC4013ATZ	500	300	478	6.5	**D50300RS-BV**	116,711	R3B	2815 (c)	6,105	T40S1309	STAB	417708-26
	1150/2000	LC4013ATZ	500	300	485	13.2	**D51300R-BV**	118,145	R3B	3015	6,104	T40S1320	STR	417708-26
400	1750/2000	MC4013ATZ	500	300	640	11.9	**D50400R-BV**	116,711	R3B	3040	6,104	T40S1314	STR	417708-26
		LC4013ATZ	500	300	635	7.97	**D50400RS-BV**	119,536	R3B	3040 (c)	6,105	T40S1311	STAB	417708-26
	1150/1600	C4413ATZ	500	300	644	13	**D51400R-BV**	148,191	R3B	3830	6,101,104	T44T1304	STR	417708-156
500	1750/2050	C4412ATZ	500	300	797	10.8	**D50500R-BV**	148,727	R3B	3480	6,101,104	T44T1305	STR	417708-156
	1150/1450	C4414ATZ	500	300	805	12.3	**D51500R-BV**	168,302	R3B	4560	6,101,104	T44T1306	STR	417708-156

Notes: Encoder and tachometer kits available.
(a) Field amps at 25°C
(b) 210TC C-Face
(c) Extruder duty enclosed commutator design
(d) Power Code D
(e) See notes on inside back flap.
Red catalog number indicates **NEW** product.

RPM III wound field SCR drive DPG motors, 240V and 500V armature, power code C

3 thru 60 Hp

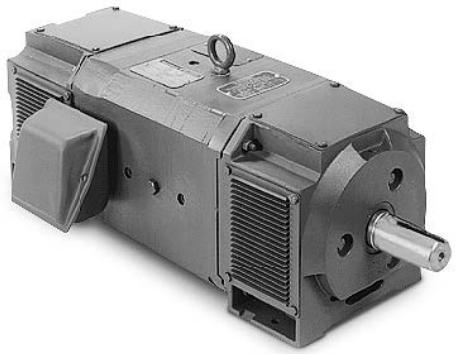

Features:

- Laminated square frame for improved commutation
- High limit thermostat
- Tachometer adaptable
- Class F insulation system
- Service line brushes with convenient wear indicating reference lines
- PLS™ bearing lubrication system for longer bearing and motor life

Applications:

- Metals
- Paper
- Web processes
- Extruders and packaging
- Machine tools

Hp	Base/Max Speed	NEMA Frame	Voltage D.C. Arm.	Voltage D.C. Field	Full Load Amperage Arm.	Full Load Amperage Field (a)(b)	Catalog Number	List Price	Disc. Sym.	Ap'x. Shpg. Wgt.	Notes (f)	Reliance M/N	Field Type	XPY Tach Kit
3	1750/2300	DC189ATCZ (c)(e)	240	150	11	1.52	**D2003R**	16,447	R3B	161	80,83	T18R1127	STAB	413336-1R
		C1811ATZ	500	300	5.2	0.72	**D5003R**	17,842	R3B	197	80	T18R1333 (d)	STR	413336-1R
5	1750/2300	C1811ATZ	240	150	19.2	1.77	**D2005R**	17,521	R3B	194	80,83	T18R1318 (d)	STAB	413336-1R
		C1811ATZ	500	300	9	1	**D5005R**	17,842	R3B	194	80	T18R1334 (d)	STR	413336-1R
7 1/2	1750/2300	C1811ATZ	240	150	28	1.95	**D2007R**	17,608	R3B	210	80,83	T18R1301 (d)	STAB	413336-1R
		C1811ATZ	500	300	13.5	1.29	**D5007R**	17,974	R3B	197	80	T18R1335 (d)	STR	413336-1R
10	1750/2300	C1812ATZ	240	150	37	2.13	**D2010R**	19,545	R3B	233	80,84	T18R1302 (d)	STAB	413336-1R
		C1812ATZ	500	300	17.4	1.09	**D5010R**	18,245	R3B	227	80,85	T18R1307 (d)	STAB	413336-1R
15	1750/2300	SC2113ATZ	240	150	56	4.12	**D2015R**	21,745	R3B	315	87	T21S1330	STAB	417708-21
		SC2113ATZ	500	150/300	27	1.76	**D5015R**	21,933	R3B	320	87	T21S1322	STAB	417708-21
20	1750/2300	LC2113ATZ	240	150	74	4.23	**D2020R**	22,951	R3B	403	87	T21S1331	STAB	417708-21
		MC2113ATZ	500	150/300	35	1.98	**D5020R**	24,871	R3B	372	87	T21S1323	STAB	417708-21
25	1750/2300	LC2113ATZ	240	150	91.5	5.84	**D2025R**	25,233	R3B	415	87	T21S1332	STAB	417708-21
		LC2113ATZ	500	150/300	43	2.63	**D5025R**	23,761	R3B	394	87	T21S1324	STAB	417708-21
30	1750/2300	SC2512ATZ	240	150	111	3.45	**D2030R**	24,604	R3B	515	87	T25S1330	STAB	417708-21
		SC2512ATZ	500	150/300	52	1.71	**D5030R**	25,027	R3B	520	87	T25S1322	STAB	417708-21
40	1750/2300	LC2512ATZ	500	150/300	68	2.4	**D5040R**	27,476	R3B	605	6,87	T25S1323	STAB	417708-21
50	1750/2300	MC2812ATZ	500	150/300	85	2.02	**D5050R**	31,873	R3B	766	6,87	T28S1313	STAB	417708-26
60	1750/2100	LC2812ATZ	500	300	100	2.78	**D5060R**	33,481	R3B	860	6,87	T28S1314	STAB	417708-26

Notes: Encoder and tachometer kits available.
(a) Field amps at 25°C
(b) Field amps for high voltage connection
(c) 180 TC C-Face
(d) Power Code D
(e) Top mounted conduit box, if blower added, blower must be mounted F-1 or F-2
(f) See notes on inside back flap.

RPM III DC motor encoder and tachometer kits

Applications: Encoder and tachometer kits for field installation

Features: Kits include the encoder or tachometer and all mounting hardware required for installation on RPM III DC motors.

Device Type	Output	Catalog Number	Frames	Enclosure	List Price	Disc. Sym.	Ap'x. Shpg. Wgt.
RD120-1	1 x 120 ppr	**417708-32**	C210-C250	DPG, DPFV, TENV	3,844	SVC	5
		417708-33	C280-C400	DPG, DPFV, TENV	3,844	SVC	5
RD120-2	2 x 120 ppr	**417708-34**	DC180, C180, DC2112	DPG, DPFV	4,573	SVC	5
		417708-36	C210-C250	DPG, DPFV, TENV	4,573	SVC	5
		417708-37	C280-C400	DPG, DPFV, TENV	4,573	SVC	5
H20	1024 ppr	**417708-133**	DC180, C180, DC2112	DPG, DPFV, TENV	4,903	SVC	5
		417708-134	C210-C250	DPG, DPFV, TENV	4,903	SVC	5
		417708-135	C280-C400	DPG, DPFV, TENV	4,903	SVC	5
		417708-151	C440	DPG, DPFV, TENV	4,903	SVC	5
RL67	1024z ppr	**417708-126**	DC180, C180, DC2112	DPG, DPFV, TENV	6,230	SVC	4
		417708-136	C210-C250	DPG, DPFV, TENV	6,230	SVC	6
		417708-137	C280-C400	DPG, DPFV, TENV	6,230	SVC	6

Encoder and tachometer mounting kits (less tach)

Applications: Encoder and tachometer kits for field installation

Features: Kits include all mounting hardware required for installation on RPM III DC motors.
Feedback device not included.

Device Type	Catalog Number	Frames	Enclosure	List Price	Disc. Sym.	Ap'x. Shpg. Wgt.
XC42, XC46, BC42, BC46, H56, 800123-R & -S	**413336-2R**	DC180, C180, DC2112	DPG, DPFV, TENV	2,295	SVC	9
	417708-22	C210-C250	DPG, DPFV, TENV	2,295	SVC	9
	417708-27	C280-C400	DPG, DPFV, TENV	2,295	SVC	9
XPY, XPYII, 5PY, RPY444	**413336-1R**	DC180, C180, DC2112	DPG, DPFV, TENV	2,295	SVC	7
	417708-21	C210-C250	DPG, DPFV, TENV	2,295	SVC	7
	417708-26	C280-C400	DPG, DPFV, TENV	2,295	SVC	7
	417708-156	C440	DPG, DPFV, TENV	2,295	SVC	8
	417709-17	C180	TEFC	5,157	SVC	6
	417709-65	C210	TEFC	5,157	SVC	6
	417709-66	C250	TEFC	5,157	SVC	9
	417709-67	C280	TEFC	5,157	SVC	15
RL67	**417708-41**	C210 - C250	DPG, DPFV, TENV	1,325	SVC	2
	417708-42	C280 - C400	DPG, DPFV, TENV	1,325	SVC	1

Blower kits for use with RPM III DC motors

Suitable for operation on 230/460V or 240/480V, 3-Phase, 50/60 Hz

Motor Frame	Catalog Number	List Price	Disc. Sym.	Ap'x. Shpg. Wgt. (lb)	Description
C180ATZ, DC180ATZ	**417077-51**	1,811	SVC	44	Blower Kit Without Filter
C210ATZ	**419947-29**	1,811	SVC	83	Blower Kit Without Filter
C250ATZ	**419947-30**	1,811	SVC	39	Blower Kit Without Filter
C280ATZ	**419947-32**	2,215	SVC	84	Blower Kit Without Filter
C320ATZ	**419947-34**	2,579	SVC	90	Blower Kit Without Filter
C3612ATZ	**417077-74**	2,579	SVC	90	Blower Kit Without Filter
C3613ATZ	**417077-127**	2,579	SVC	110	Blower Kit Without Filter
C400ATZ	**417077-75**	2,823	SVC	85	Blower Kit Without Filter
C440ATZ	**417077-126**	5,756	SVC	225	Blower Kit Without Filter

Filter kits for use with DPF-FV, RPM III DC motors

Suitable for operation on 230/460V or 240/480V, 3-Phase, 50/60 Hz

Motor Frame	Catalog Number	List Price	Disc. Sym.	Ap'x. Shpg. Wgt. (lb)	Description
C180ATZ, DC180ATZ	**417077-57**	1,107	SVC	2	Washable Wire Mesh Canister Type
C2113ATZ	**417077-58**	1,107	SVC	4	Washable Wire Mesh Canister Type
C2115ATZ	**417077-59**	1,107	SVC	4	Washable Wire Mesh Canister Type
C2512ATZ	**417077-58**	1,107	SVC	4	Washable Wire Mesh Canister Type
C2514ATZ	**417077-59**	1,107	SVC	4	Washable Wire Mesh Canister Type
C2515ATZ	**417077-59**	1,107	SVC	4	Washable Wire Mesh Canister Type
C2812ATZ	**417077-59**	1,107	SVC	4	Washable Wire Mesh Canister Type
C2813ATZ	**417077-59**	1,107	SVC	4	Washable Wire Mesh Canister Type
C2815ATZ	**417077-59**	1,107	SVC	4	Washable Wire Mesh Canister Type
C3210ATZ	**417077-59**	1,107	SVC	4	Washable Wire Mesh Canister Type
C3212ATZ	**417077-59**	1,107	SVC	4	Washable Wire Mesh Canister Type
C3214ATZ	**417077-59**	1,107	SVC	4	Washable Wire Mesh Canister Type
C3612ATZ	**417077-65**	1,415	SVC	7	Washable Wire Mesh Canister Type
C3613ATZ	**417077-102**	1,415	SVC	6	Washable Wire Mesh Canister Type
C400ATZ	**417077-102**	1,415	SVC	6	Washable Wire Mesh Canister Type
C440ATZ	**417077-124**	2,300	SVC	22	Square Replaceable Polyester Type

Sliding Bases for RPM III DC motors

Suitable for operation on 230/460V or 240/480V, 3-Phase, 50/60 Hz

Applications: Used for adjusting belt tension on belted applications. Not suitable for wall or ceiling mounting.

Motor Frame	Catalog Number	List Price	Disc. Sym.	Ap'x. Shpg. Wgt. (lb)	Description	Dimension Sheet
DC1811ATZ	**42384-26BE**	1,183	SVC	17	Heavy Duty	609987-501
C1811ATZ	**42384-26BE**	1,183	SVC	17	Heavy Duty	609987-1
C2512ATZ	**419914-1B**	856	SVC	33	Heavy Duty	609957-1
C2515ATZ	**419914-1S**	1,485	SVC	36	Heavy Duty	609957-1
UC2813ATZ	**419914-1T**	1,485	SVC	26	Heavy Duty	609957-1
UC3212ATZ	**419914-1D**	1,951	SVC	69	Heavy Duty	609977-1
UC3612ATZ	**419914-1E**	2,631	SVC	76	Heavy Duty	609977-1

SCR drive motors, shunt wound – DPFG, self ventilated, rigid base

5 thru 250 Hp

Features:

- High dielectric stability
- Low moment of inertia armature for fast response
- Includes thermostat on interpole
- Constant pressure brush springs and longer brushes for reduced maintenance
- Class F insulation system
- Includes grease fittings and reliefs for bearing maintenance
- Tachometer adaptable

Applications:

- Conveyors
- Plastic extruders
- Packaging machinery
- Other constant torque applications

Hp	Base/Max Speed (a)	NEMA Frame	Voltage D.C. Arm.	Voltage D.C. Field	Full Load Amperage Arm.	Full Load Amperage Field (b)	Catalog Number	List Price Motors Only (c)	Disc. Sym.	Ap'x. Shpg. Wgt. (d)	XPY Tach Kit	Blower Catalog Number	Shunt Type	Notes (e)
5	1750/2300	L186AT	240	150/300	17.7	.74	**D2005P**	14,306	RSV	180	TKP1836XP	FVB3180	Straight	2,20
			500	150/300	8.5	.669	**D5005P**	14,306	RSV	162	TKP1836XP	FVB3180	Straight	2,20
7 1/2	1750/2300	1810AT	240	150/300	27.8	.92	**D2007P**	16,667	RSV	218	TKP1836XP	FVB3180	Straight	2,20
		218AT	500	150/300	13.2	.685	**D5007P**	16,667	RSV	235	TKP1836XP	FVB3210	Straight	2,20
10	1750/2300	219AT	240	150/300	36.6	2.14	**D2010P**	16,976	RSV	245	TKP1836XP	FVB3210	Straight	2,20
			500	150/300	17.2	1.36	**D5010P**	16,976	RSV	255	TKP1836XP	FVB3210	Straight	2,20
15	1750/2300	258AT	240	150/300	55	2.60	**D2015P**	19,001	RSV	375	TKP1836XP	FVB3250	Straight	2,20
			500	150/300	25.2	1.39	**D5015P**	19,001	RSV	375	TKP1836XP	FVB3250	Straight	2,20
20	1750/2300	259AT	240	150/300	70.5	2.48	**D2020P**	20,019	RSV	430	TKP1836XP	FVB3250	Straight	2,20
			500	150/300	35.1	1.24	**D5020P**	20,019	RSV	430	TKP1836XP	FVB3250	Straight	2,20
25	1750/2300	288AT	240	150/300	89.2	2.96	**D2025P**	24,669	RSV	575	TKP1836XP	FVB4280	Straight	2,20
		287-8AT	500	150/300	43.4	1.64	**D5025P**	24,669	RSV	490	TKP1836XP	FVB4280	Straight	2,20
30	1750/2300	288AT	240	150/300	106	2.96	**D2030P**	24,669	RSV	595	TKP1836XP	FVB4280	Straight	2,20
			500	150/300	50	2	**D5030P**	24,669	RSV	590	TKP1836XP	FVB4280	Straight	2,20
40	1750/2100	328AT	500	150/300	67.9	2.16	**D5040P**	33,017	RSV	784	TKP1836XP	FVB6320	Straight	2,20
50	1750/2100	328AT	500	150/300	83.7	1.99	**D5050P**	33,017	RSV	822	TKP1836XP	FVB6320	Straight	2,20
60	1750/2100	365-6AT	500	150/300	98.6	1.74	**D5060P**	44,271	RSV	790	TKP1836XP	FVB6400	Stab	2,20
75	1750/2100	366AT	500	150/300	123	1.48	**D5075P**	44,271	RSV	905	TKP1836XP	FVB6400	Stab	2,20
100	1750/2000	368AT	500	150/300	158	3	**D50100P**	59,708	RSV	1100	TKP1836XP	FVB6400	Straight	2,20
125	1750/2000	407AT	500	150/300	200	3	**D50125P**	68,671	RSV	1445	TKP400XP	FVB6400	Straight	2,20
150	1750/2000	409AT	500	150/300	237	2.34	**D50150P**	85,619	RSV	1785	TKP400XP	FVB6400	Straight	2,20
200	1750/1900	504AT	500	150/300	320	3.9	**D50200P**	92,574	RSV	2095	TKP500XP	FVB8500	Straight	2,20
250	1750/1900	506AT	500	150/300	392	5.01	**D50250P**	110,088	RSV	2540	TKP500XP	FVB8500	Straight	2,20

Notes:

(a) DPFG enclosure is self-ventilated. Speed can be reduced to approximately 60% of base speed with constant torque.
See performance data in CA608 catalog for specific speed-torque curves. Separate blower can be used to increase operating range below 60% of base speed.

(b) Field amps are for 150V connection on 240VDC motors; 300V connection on 500VDC motors.

(c) Does not include price of blower.

(d) Does not include weight of blower.

(e) See notes on inside back flap.

180 frame motors are supplied without external conduit box, see online layout drawing for details.

SCR drive motor, shunt and stabilized shunt wound DPBV enclosure – rigid base

40 thru 500 Hp

Features:

- High dielectric stability
- Low moment of inertia armature for fast response
- Includes thermostat on interpole
- Constant pressure brush springs and longer brushes for reduced maintenance
- Class F insulation system
- Includes grease fittings and reliefs for bearing maintenance
- Tachometer adaptable
- Blower-ventilated, includes filter

Applications:

- Conveyors
- Plastic extruders
- Packaging machinery
- Other constant torque applications

Hp	Base/Max Speed	NEMA Frame	Voltage D.C. Arm.	Voltage D.C. Field	Full Load Amperage Arm.	Full Load Amperage Field (a)	Catalog Number	List Price w/Blower & Filter	Disc. Sym.	Ap'x. Shpg. Wgt.	XPY Tach Kit	Field Type	Notes (b)
40	1750/2100	328AT	240	150/300	138	2.64	**D2040P-BV**	38,428	RSV	855	TKP1836XP	STR	2,20
			500	150/300	67.9	2.16	**D5040P-BV**	38,428	RSV	830	TKP1836XP	STR	2,20
50	1750/2100	328AT	240	150/300	175	2.64	**D2050P-BV**	40,628	RSV	873	TKP1836XP	STR	2,20
			500	150/300	83.7	1.99	**D5050P-BV**	40,628	RSV	885	TKP1836XP	STR	2,20
60	1750/2100	366AT	240	150/300	201	5.58	**D2060P2-BV**	49,730	RSV	980	TKP1836XP	STR (c)	2,20
		365-6AT	500	150/300	98.6	1.74	**D5060P-BV**	49,730	RSV	880	TKP1836XP	STAB	2,20
75	1750/2100	366AT	240	150/300	256	5.58	**D2075P2-BV**	51,930	RSV	975	TKP1836XP	STR (c)	2,20
			500	150/300	123	1.48	**D5075P-BV**	51,930	RSV	960	TKP1836XP	STAB	2,20
100	1750/2000	368AT	500	150/300	158	3	**D50100P2-BV**	62,809	RSV	1145	TKP1836XP	STR (c)	2,20
125	1750/2000	368AT	500	150/300	197	3	**D50125P2-BV**	65,167	RSV	1170	TKP1836XP	STR (c)	2,20
150	1750/2000	407-9AT	500	150/300	238	2.69	**D50150P2-BV**	79,396	RSV	1519	TKP400XP	STR (c)	2,20
200	1750/1900	409AT	500	150/300	311	3.75	**D50200P2-BV**	93,026	RSV	1830	TKP400XP	STR (c)	2,20
250	1750/1900	504-6AT	500	150/300	405	4.85	**D50250P2-BV**	97,471	RSV	2175	TKP500XP	STR (c)	2,20
300	1750	506AT	500	150/300	478	6.2	**D50300P2-BV**	112,176	RSV	2629	TKP500XP	STR (c)	2,20
400	1750/1900	508AT	500	150/300	624	6.07	**D50400P2-BV**	139,361	RSV	3285	TKP5006XP	STR (c)	2,20
500	1750/1900	5010AT	500	150/300	788	6.03	**D50500P2-BV**	171,637	RSV	4170	TKP500XP	STR (c)	2,20

Notes:
(a) Field amps are for 150V connection on 240VDC motors; 300V connection on 500VDC motors.
(b) See notes on inside back flap.
(c) Replaces previous catalog motor if it was straight shunt. Stab shunt will require new design.
Red catalog number indicates **NEW** product.

SCR drive motor, 240V armature – 240V field shunt wound DPFG – Self-ventilated rigid base and C-Face

3 thru 15 Hp

Features:

- High dielectric stability
- Low moment of inertia armature for fast response
- Includes thermostat on interpole
- Constant pressure brush springs and longer brushes for reduced maintenance
- Class F insulation system
- Includes grease fittings and reliefs for bearing maintenance
- Power Code C or M-G sets
- Maximum RPM by field weakening

Applications:

- Textile equipment
- Conveyors
- Plastic extruders
- Packaging machinery
- Other constant torque applications

Hp	Base/Max Speed	NEMA Frame	Voltage D.C. Arm.	Voltage D.C. Field	Full Load Amperage Arm.	Full Load Amperage Field (a)	Catalog Number	List Price Motor (b)	Disc. Sym.	Ap'x. Shpg. Wgt. (c)	XPY Tach Kit	Blower Catalog Number	Notes (d)
3	1750/2300	L186ATC	240	120/240	10.6	.445	**CD2003P-2**	14,659	RSV	170	TKP1836XP	FVB3180	2
5	1750/2300	L186ATC	240	120/240	17.7	.484	**CD2005P-2**	14,884	RSV	170	TKP1836XP	FVB3180	2
7 1/2	1750/2300	1810ATC	240	120/240	28.1	.458	**CD2007P-2**	17,009	RSV	222	TKP1836XP	FVB3180	2
10	1750/2300	219ATC	240	120/240	36.6	1.26	**CD2010P-2**	17,616	RSV	250	TKP1836XP	FVB3210	2
15	1750/2300	258ATC	240	120/240	55	1.25	**CD2015P-2**	19,994	RSV	408	TKP1836XP	FVB3250	2

Notes: (a) Field amps for 240VDC connection.
(b) Does not include price of blower and filter.
(c) Does not include weight of blower and filter. Tach mounting kits available.
(d) See notes on inside back flap. 180 frame motors are supplied without external conduit box, see online layout drawing for details.

Shunt wound SCR drive motor – TEFC, rigid base

5 thru 25 Hp

Features:

- Includes thermostat on interpole
- Constant pressure brush springs and longer brushes for reduced maintenance
- Class F insulation system
- Includes grease fittings and reliefs for bearing maintenance
- Tachometer adaptable

Applications:

- Conveyors
- Packaging machinery

Hp	Base/Max Speed	NEMA Frame	Voltage D.C. Arm.	Voltage D.C. Field	Full Load Amperage Arm.	Full Load Amperage Field (a)	Catalog Number	List Price Motors Only	Disc. Sym.	Ap'x. Shpg. Wgt.	XPY Tach Kit	Notes (b)
5	1750/2300	1810AT	240	150/300	17.6	0.764	**D2505P**	16,442	RSV	220	N/A	2
			500	150/300	8.3	0.382	**D5505P**	16,442	RSV	214	N/A	2
7 1/2	1750/2300	2110AT	240	150/300	26.6	2.10	**D2507P**	19,347	RSV	300	TKP2136XPT	2
			500	150/300	12.3	1.05	**D5507P**	19,347	RSV	310	TKP2136XPT	2
10	1750/2300	259AT	240	150/300	34.3	1.72	**D2510P**	21,810	RSV	250	TKP2136XPT	2
			500	150/300	16.3	0.86	**D5510P**	21,810	RSV	250	TKP2136XPT	2
15	1750/2300	288AT	240	150/300	51.7	1.96	**D2515P**	28,130	RSV	630	TKP2136XPT	2
			500	150/300	24.5	0.99	**D5515P**	28,130	RSV	630	TKP2136XPT	2
20	1750/2300	328AT	240	150/300	68.8	2.22	**D2520P**	37,048	RSV	850	TKP2136XPT	2
			500	150/300	32.7	1.11	**D5520P**	37,048	RSV	875	TKP2136XPT	2
25	1750/2300	328AT	240	150/300	84.8	2.22	**D2525P**	39,248	RSV	872	TKP2136XPT	2
			500	150/300	40.9	1.11	**D5525P**	39,248	RSV	875	TKP2136XPT	2

Notes: (a) Field amps are for 150V connection on 240VDC motors; 300V connection on 500VDC motors. Tach mounting kits available.
(b) See notes on inside back flap.
180 frame motors are supplied without external conduit box, see online layout drawing for details.

Lifting magnet generators

5 thru 40 kW

Features:

- Class H insulation with Class F temperature rise
- Precision brush holders
- Constant pressure brush springs
- Double sealed bearings
- Compound wound with drooping voltage characteristics
- CDMG generators have C-Face and base mounting

Applications:

- Crane mounted lifting magnets

kW	Base Speed	NEMA Frame	Voltage D.C.		Full Load Amperage		Catalog Number	List Price	Disc. Sym.	Ap'x. Shpg. Wgt.	Field Control Rheostat		Notes (a)
			Arm.	Field	Arm.	Field					Ohms	Amp Max.	
5	2500	1810AT	230	230	21.7	0.62	**DMG2305**	16,772	RSV	220	300	0.85	2
7 1/2	2500	219AT	230	230	32.6	1.15	**DMG2307**	17,105	RSV	245	150	1.6	2
10	2500	219AT	230	230	43.5	0.878	**DMG2310**	17,569	RSV	250	200	1.4	2
		219ATC	230	230	43.5	0.878	**CDMG2310**	17,918	RSV	250	200	1.4	2
15	1750	259AT	230	230	65	1.33	**DMG2315**	25,303	RSV	250	200	1.82	2
		259ATC	230	230	65	1.33	**CDMG2315**	26,225	RSV	250	200	1.82	2
20	1750	288AT	230	230	87	1.8	**DMG2320**	28,014	RSV	595	125	2.52	2
		288ATC	230	230	87	1.8	**CDMG2320**	29,276	RSV	613	125	2.52	2
25	1750	328AT	230	230	109	2.13	**DMG2325**	30,289	RSV	820	100	3.0	2
		328ATC	230	230	109	2.13	**CDMG2325**	31,854	RSV	886	100	3.0	2
33	1750	328AT	230	230	144	2.13	**DMG2333**	38,409	RSV	840	100	3.0	2
		328ATC	230	230	144	2.13	**CDMG2333**	39,962	RSV	880	100	3.0	2
40	1750	329AT	230	230	174	3.7	**DMG2340**	42,103	RSV	910	50	5.2	2

Notes:
Field control rheostat and meters are not included in price or available from ABB.
(a) See notes on inside back flap.

Tach mounting kits and cooling blowers for DC integral Hp motors

Applications: Allows addition of DC, AC and digital tachometers to large DC motors for closed-loop operation.

Features: Tach mounting kits supply adapter, coupling, accessory shaft and mounting hardware. Allows mounting to 8.5 inch accessory face on most large DC motors.

Tach mounting kits for DC integral Hp motor catalog number ending with "P"

Tach Type	Motor Frame	Motor Enclosure	Catalog Number	List Price	Disc. Sym.	Ap'x. Shpg. Wgt.
XPY, XPYII, DPY, BTG1000	180/360	DPFG, DPBV	**14009-1**	1,774	SVC	2
	210/360	TEFC	**TKP2136XPT**	3,098	SVC	13
	500	DPFG, DPBV	**TKP500XP**	3,219	SVC	3

Blower and mounting kits for DC integral Hp motor catalog number ending with "P"

Motor Frame	Catalog Number	Blower Power	Blower Size	List Price	Disc. Sym.	Ap'x. Shpg. Wgt.
Blower and mounting kit						
180	**FVB3180**	1 PH	LM 3	1,811	SVC	18
210	**FVB3210**	3 PH	LM 3	1,811	SVC	25
250	**FVB3250**	3 PH	LM 3	1,811	SVC	19
280	**FVB4280**	3 PH	LM 4	2,214	SVC	44
320	**FVB6320**	3 PH	LM 6	2,579	SVC	46
360-400	**FVB6400**	3 PH	LM 6	2,821	SVC	59
504-506	**FVB8500**	3 PH	LM 8	3,340	SVC	93
508-5012	**FVB95010 (a)**	3 PH	LM 9	5,148	SVC	171
Filter and hardware for above blowers						
180, 210, 250	**FLT3210-250 (b)**	–	LM 3	960	SVC	2
280	**FLT4280**	–	LM 4	960	SVC	9
320, 360, 400	**FLT6320-400**	–	LM 6	960	SVC	14
504-506	**FLT8500**	–	LM 8	1,172	SVC	9

Notes:
(a) Includes Blower and Filter.
(b) Also used with FVB3180.

Tachometer generators DC, AC and digital output

Flange Mounted

Foot Mounted

Applications: Speed feedback for controls.

Features: Ball bearing construction, UL/CSA approved, IP55, standard mounting C-Face and foot mounted.

Generator Type	Voltage	Catalog Number	List Price	Disc. Sym.	Ap'x. Shpg. Wgt.
XPY flange mount (DC)					
XPYIV	50VDC	**CMTG50XPYIV**	4,912	R3B	5.5
XPYIV	100VDC	**CMTG100XPYIV**	4,912	R3B	5.5
XPY foot mount (DC)					
XPYIV	50VDC	**FMTG50XPYIV**	4,912	R3B	6.4
XPYIV	100VDC	**FMTG100XPYIV**	4,912	R3B	6.4
Encoder based digital PY flange mount					
DPY	1024PPR	**PTG1024LD (a)**	2,660	R3B	1
Electrically isolated encoder					
E-ACC	1024PPR	**ENC00NV (a)**	2,346	SVC	2

Notes:
Flange mounted tachs require tach adapters.
XPY tachs have UL/CSA listing, file number E351535.
(a) See Feedback Cable Assemblies for cables.
Red catalog number indicates **NEW** product.

Field conversion tach mounting kits

For permanent magnet and shunt wound motors

For PY Flange mounted BTG1000, XPY, XPYII and DPY tachometers.

Complete kits consisting of fan cover (except TK3300), shaft extension coupling and tach adapter bracket with miscellaneous hardware.

If you prefer, the conversion can be made by Motor Mod Express®.

Tach kits will not work with explosion proof motors (CDPX or CDX).

See PY flange mount tachs.

Baldor-Reliance® Motor Type	Kit Catalog Number	List Price	Disc. Sym.	Ap'x. Shpg. Wgt.
3300P	**TK3300**	245	SVC	1
3400D/P	**TK3400**	434	SVC	4
3500D/P	**TK3500**	457	SVC	9
3600P	**TK3600PM**	604	SVC	7

NEMA 1 enclosed DC controls for PMDC and shunt wound motors

1/100 thru 2 Hp, 115/230 VAC, single phase, 50/60 Hz

BC140-FBR
Enclosed
(NEMA 1)

BC138
Enclosed
(NEMA 1)

Applications: General purpose industrial use with permanent magnet or shunt wound DC motors.

Features: SCR controls have a free-wheeling diode and feature adjustable accel, decel, current limit, IR comp, min. and max speed pots to match applications. The anti-demag feature protects PM motors and helps protect the SCR power bridge against direct shorts.

Rugged all-metal NEMA 1 / IP20 enclosure. Unidirectional drives – change motor rotation by switching armature leads or by adding Forward/Brake/Reverse switch kit, if available.

The controls have US and Canadian UL component recognition.

A Plug-in Horsepower Resistor® and armature fuse must be ordered and installed in BC138, BC139, BC140, BC140-FBR, BC141 and BC142.

Catalog Number	Hp Range & Input Voltage		Description	Max Input Current (AC Amps)	Max Output Current (DC Amps)	List Price	Disc. Sym.	Ap'x. Shpg. Wgt. (lbs)
	115VAC Input / 90VDC Armature	230VAC Input / 180VDC Armature (c)						
BC138	1/100 - 1/3	—	Enclosed SCR control, single voltage	5	3.5	359	PMS	1
BC139	—	1/50 - 3/4	Enclosed SCR control, single voltage	5	3.5	359	PMS	1
BC140	1/100 - 3/4	1/50 - 1.5	Enclosed SCR control, optional heatsink, dual voltage	12	6	608	PMS	3
	1/100 - 1 (a)	1/50 - 2 (a)		16 (a)	12 (a)			
BC140-FBR (b)	1/100 - 3/4	1/50 - 1.5	BC140 with BC144 Forward/Brake/ Reverse switch factory installed	12	6	840	PMS	3
	1/100 - 1 (a)	1/50 - 2 (a)		16 (a)	12 (a)			

Notes:
(a) Max rating of 1 Hp at 115V and 2 Hp at 230V requires BC143 heatsink kit. See specification pages at the end of this section for details.
(b) FBR = Forward/Brake/Reverse switch installed
(c) Drives with 230V input can operate 90V motors at reduced performance levels. Refer to Installation & Operation Manual for details.
A Plug-in Horsepower Resistor® and armature fuse must be ordered and installed in BC138, BC139, BC140 and BC140-FBR.

DC control accessories

Catalog Number	Description	List Price	Disc. Sym.	Ap'x. Shpg. Wgt.
BC24-LF	AC Line Filter for use with CE Applications (24 Amps AC Max.)	124	PMS	1
BC143	External Heatsink Kit (BC140, BC140-FBR, BC141, BC142, BC204)	119	PMS	2
BC144	Forward-Brake-Reverse Switch Kit for BC140	204	PMS	1
BC145	Signal Isolator Board	347	PMS	1
BC147	Barrier Terminal Board (BC141 and BC142)	49	PMS	1
BC148	Replacement Potentiometer Kit (5K ohm)	21	PMS	1
BC149	Knob and Dial Kit	25	PMS	1
BC152	Barrier Terminal Board With Signal Isolator (BC141 and BC142)	318	PMS	1
BC218	DIN-rail mounting kit for BC141, BC142 or BC204	81	PMS	1

Notes:
BC24-LF is an AC line filter required for applications where CE is required if the control is not filtered elsewhere in the application.
This filter may be used on most 115 or 230 VAC, single phase applications where CE is required.

Chassis mount DC controls

1/100 thru 1.5 Hp, 115 VAC, single phase, 50/60 Hz
1/50 thru 5 Hp, 230 VAC, single phase, 50/60 Hz

BC142-SIH

Applications: General purpose industrial use with permanent magnet or shunt wound DC motors.

Features: Chassis-mount SCR controls have a free-wheeling diode and feature adjustable accel, decel, current limit, IR comp, min and max speed pots to match applications.
The anti-demag feature protects PM motors and helps protect the SCR power bride against direct shorts.
The controls have US and Canadian UL component recognition.

A Plug-in Horsepower Resistor® and armature fuse **must** be ordered and installed in all versions of BC141 and BC142.

Catalog Number	Hp Range & Input Voltage		Description	Max Input Current (AC Amps)	Max Output Current (DC Amps)	List Price	Disc. Sym.	Ap'x. Shpg. Wgt. (lbs.)
	115VAC Input / 90VDC Armature	230VAC Input / 180VDC Armature (b)						
Chassis mount – SCR controls								
BC141	1/100 - 0.75	–	Chassis SCR control, optional heatsink, single voltage	12.0	8.0	333	PMS	1
	1/100 - 1.5 (a)	–		24.0 (a)	16.0 (a)			
BC141-SIH	1/100 - 0.75	–	BC141 with BC152 Signal Isolator and BC143 Heatsink factory installed	12.0	8.0	785	PMS	2
	1/100 - 1.5 (a)	–		24.0 (a)	16.0 (a)			
BC142	–	1/100 - 1.5	Chassis SCR control, optional heatsink, single voltage	12.0	8	333	PMS	2
	–	1/100 - 3.0 (a)		24.0 (a)	16.0 (a)			
BC142-SIH	–	1/100 - 1.5	BC142 with BC152 Signal Isolator and BC143 Heatsink factory installed	12.0	8.0	822	PMS	2
	–	1/100 - 3.0 (a)		24.0 (a)	16.0 (a)			
BC142-5	1/100 - 0.75	1/100 - 1.5	Chassis SCR Control, optional heatsink, dual voltage, supplied without fuses and fuse holders	12.0	8.0	371	PMS	1
	1/100 - 1.5 (a)	1/100 - 3.0 (a)		24.0 (a)	16.0 (a)			
BC142-6	1/100 - 0.75	1/100 - 1.5	Chassis SCR control, optional heatsink, dual voltage	12.0	8.0	369	PMS	1
	1/100 - 1.5 (a)	1/100 - 3.0 (a)		24.0 (a)	16.0 (a)			
BC142-6-SIH	1/100 - 0.75	1/100 - 1.5	BC142-6 with BC152 signal isolator board and BC143 Heatsink factory installed	12.0	8.0	822	PMS	1
	1/100 - 1.5 (a)	1/100 - 3.0 (a)		24.0 (a)	16.0 (a)			
BC155	–	5.0	Chassis SCR control with heatsink, single voltage	38.0	26.0	1,087	PMS	5
Chassis mount – line regenerative SCR controls								
BC204	1/6 - 0.75	1/3 - 1.0	Chassis regen SCR control, optional heatsink, dual voltage	12.0	8.0	621	PMS	3
	1/6 - 1.5 (a)	1/3 - 2.0 (a)		16.0 (a)	11.0 (a)			
BC204-BPSI	1/6 - 0.75	1/3 - 1.0	BC204 with BC215 Bi-polar Signal Isolator factory installed	12.0	8.0	802	PMS	3
	1/6 - 1.5 (a)	1/3 - 2.0 (a)		16.0 (a)	11.0 (a)			
BC200	1/8 - 1.0	1/4 - 2.0	Chassis regen SCR control, optional heatsink, dual voltage	16.0	11.0	1,159	PMS	4
BC201	1/8 - 1.5	1/4 - 3.0	Chassis regen SCR control, optional heatsink, dual voltage	16.0	16.0	1,377	PMS	1
BC203	–	5.0	Chassis regen SCR control, with heatsink, single voltage	38.0	25.0	1,732	PMS	10

Notes:
Chassis mount controls include 5k speed potentiometer.
Chassis mount control accessories are shown on the previous page
(a) BC143 Heatsink kit required for higher power ratings. See accessory table at the end of this section for details.
(b) Except for BC203, drives with 230V input can operate 90V motors at reduced performance levels. Refer to Installation & Operation Manual for details.

Plug-in horsepower resistor and fuse kit

Horsepower resistors should be selected based on the motor's rated current. The price of the Hp resistor and fuse is included in the BC138, BC139, BC140, BC140-FBR, BC141 and BC142 list price.

See selection below for catalog number.

Ordered as a separate item and shipped at no charge with a drive.

Motor Hp Armature Voltage		Plug-In Hp Resistor Resistance Value (Ohms)	Catalog Number	List Price	Disc. Sym.	Ap'x. DC Current (Amps)	DC Fuse Rating for Armature
90-130V	180V						
1/100	1/50	1.0	**BR1000**	18	PMS	0.20	0.5
1/50	1/25	0.51	**BR0510**	18	PMS	0.30	0.5
1/30	1/15	0.35	**BR0350**	40	PMS	0.33	0.5
1/20	1/10	0.25	**BR0250**	18	PMS	0.5	0.75
1/15	1/8	0.25	**BR0251**	18	PMS	0.8	1.0
1/12	1/6	0.18	**BR0180**	18	PMS	0.85	1.25
1/8	1/4	0.1	**BR0100**	18	PMS	1.3	2.0
1/6	1/3	0.1	**BR0101**	18	PMS	2.0	2.5
1/4	1/2	0.05	**BR0050**	18	PMS	2.5	4.0
1/3	3/4	0.035	**BR0035**	18	PMS	3.3	5.0
1/2	1	0.025	**BR0025**	18	PMS	5.0	8.0
3/4	1 1/2	0.015	**BR0015SP**	18	PMS	7.5	12.0
1 (a)	2 (a)	0.01	**BR0010SP**	18	PMS	10	15.0
1 1/2 (a)	3 (a)	0.006	**BR0006**	18	PMS	15	25.0 (b)

Notes:
(a) External heatsink required.
(b) Also used with AC line fuse. For AC line fuse rating see manual.

NEMA 4X DC control and accessories

1/4 thru 2 Hp, 115/230 VAC, single phase, 50/60 Hz
3 Hp, 230 VAC, single phase, 50/60 Hz

BC154 / BC160 / BCWD140 / BC354

Applications: Constant torque, new or replacement.

Features: NEMA 4X / IP65 sealed enclosure with built-in heatsink for wet/dirty environments. BC154, BCWD140 and BC160 are unidirectional controls. Change motor direction by switching armature leads or by adding Forward/Brake/Reverse switch kit, if available. BC254 is a line regenerative SCR control for reversing applications and can drive the motor to a timed stop. BC354 is a PWM control that provides low-ripple DC power to the motor allowing more Hp when used with a 130 or 260 VDC motor. BC154, BC160, BC254 and BC354 are painted light gray and come with a start-stop switch. BCWD140 has a white epoxy coating (ideal for food processing applications) with forward/brake/reverse and run-jog switches installed. All offer a choice of armature or tachometer feedback and a speed or torque mode.

No Hp resistors are needed for these controls and current is jumper selectable.

Catalog Number	Hp Range & Input Voltage: 115VAC Input / 90VDC Armature	Hp Range & Input Voltage: 230VAC Input / 180VDC Armature (c)	Description	Max Input Current (AC Amps)	Max Output Current (DC Amps)	List Price	Disc. Sym.	Ap'x. Shpg. Wgt. (lbs.)
NEMA 4X / IP65 Washdown duty SCR controls								
BC154	1/50 - 1	1/25 - 2	Enclosed SCR control, dual voltage	15.0	10.2	769	PMS	5
BC154-P	1/50 - 1	1/25 - 2	BC154 with Power switch instead of Start/Stop switch	15.0	10.2	769	PMS	5
BC154-R	1/50 - 1	1/25 - 2	BC154 with BC156 – Fwd/Brake/Rev Switch factory installed	15.0	10.2	1,014	PMS	5
BC154-SI	1/50 - 1	1/25 - 2	BC154 with BC145 Signal Isolator Board and BC158 Auto/Man Switch Kit factory installed	15.0	10.2	1,237	PMS	5
BC160	1.5	3	Enclosed SCR control, dual voltage	22.0	15.0	884	PMS	3
NEMA 4X / IP65 Washdown duty SCR control with white epoxy coating								
BCWD140	1/50 - 1	1/25 - 2	Enclosed SCR control, dual voltage, white epoxy coating	15.0	10.2	1,029	PMS	6
NEMA 4X / IP65 Washdown duty line regenerative SCR control								
BC254	1/10 - 1	1/5 - 2	Enclosed regen SCR control, dual voltage (a)	15.0	11.0	1,108	PMS	5
BC254-FBR	1/10 - 1	1/5 - 2	BC254 with Power On/Off switch instead of Start/Stop switch and BC253 Fwd-Brake-Rev Switch factory installed	15.0	11.0	1,163	PMS	5
NEMA 4X / IP65 Washdown duty PWM control								
BC354	1/50 - 0.75	1/25 - 1.5	Enclosed PWM control, dual voltage, with SCR rated motor	11.5	7.5	1,191	PMS	5
	1/30 - 1 (b)	1/20 - 2 (b)	Enclosed PWM control, dual voltage, with PWM rated motor					

Notes:
(a) See the next page for BC254 accessories.
(b) Motors with PWM rated motors designed for 130VDC (115VAC input) or 260VDC (230VAC input) will give best drive performance.
(c) Except for BC354, drives with 230V input can operate 90V motors at reduced performance levels. Refer to Installation & Operation Manual for details.

DC SCR NEMA 4X DC control accessories

Catalog Number	Description	List Price	Disc. Sym.	Ap'x. Shpg. Wgt.
BC153	Electronic Forward-Dynamic Brake-Reverse Kit for BC154, BC354	367	PMS	1
BC156	Mechanical Forward-Dynamic Brake-Reverse Switch for BC154, BC354	239	PMS	1
BC157	Run/Jog switch for BC154 & BC160, BC354	44	PMS	1
BC158	Auto/Manual Installation Kit for BC145 signal isolator for BC154, BC160, BC354	99	PMS	1
BC159	AC Line Switch Kit for BC154, BCWD140, BC354	53	PMS	1
BC145	Signal Isolator Board	347	PMS	1

Note: BC159 AC Line Switch Kit is factory installed on BC154, BCWD140, BC254 and BC354. Listed here as replacement or spare parts.

Line regenerative DC controls and accessories

1/4 thru 3 Hp, 115/230 VAC, single phase, 50/60 Hz
5 Hp, 230 VAC, single phase, 50/60 Hz

BC254-FBR

BC200 / BC201

BC204

Applications: Frequent start/stop/reverse applications or where controlled braking is required.

Features: Single phase line regenerative open chassis control to operate permanent magnet or wound field DC motors.

These line regen controls are ideal for applications with overhauling loads. In torque mode, they can be used for tensioning applications.

Several accessory boards are available to further customize the controls.

Includes 5k speed potentiometer.
Jumper selectable current settings.

Catalog Number	Hp Range & Input Voltage: 115VAC Input / 90VDC Armature	Hp Range & Input Voltage: 230VAC Input / 180VDC Armature (b)	Description	Max Input Current (AC Amps)	Max Output Current (DC Amps)	List Price	Disc. Sym.	Ap'x. Shpg. Wgt. (lbs.)
Chassis mount – line regenerative SCR								
BC204	1/6 - 0.75	1/3 - 1.0	Chassis regen SCR control, optional heatsink, dual voltage	12.0	8.0	621	PMS	3
	1/6 - 1.5 (a)	1/3 - 2.0 (a)		16.0 (a)	11.0 (a)			
BC204-BPSI	1/6 - 0.75	1/3 - 1.0	BC204 with BC215 Bi-polar Signal Isolator factory installed	12.0	8.0	802	PMS	3
	1/6 - 1.5 (a)	1/3 - 2.0 (a)		16.0 (a)	11.0 (a)			
BC200	1/8 - 1.0	1/4 - 2.0	Chassis regen SCR control, optional heatsink, dual voltage	16.0	11.0	1,159	PMS	4
BC201	1/8 - 1.5	1/4 - 3.0	Chassis regen SCR control, optional heatsink, dual voltage	16.0	16.0	1,377	PMS	1
BC203	—	5.0	Chassis regen SCR control, with heatsink, single voltage	38.0	25.0	1,732	PMS	10
NEMA 4X / IP65 Washdown duty – line regenerative SCR								
BC254	1/10 - 1	1/5 - 2	Enclosed regen SCR control, dual voltage	15.0	11.0	1,108	PMS	5
BC254-FBR	1/10 - 1	1/5 - 2	BC254 with Power On/Off switch instead of Start/Stop switch and BC253 Fwd-Brake-Rev Switch factory installed	15.0	11.0	1,163	PMS	5

Notes
Chassis mount controls include 5k speed potentiometer.
(a) BC143 Heatsink kit required for higher power ratings. See accessory table at the end of this section for details.
(b) Except for BC203, drives with 230V input can operate 90V motors at reduced performance levels. Refer to Installation & Operation Manual for details.

Line regenerative DC control accessories

Catalog Number	Description	List Price	Disc. Sym.	Ap'x. Shpg. Wgt.
Accessories for BC200, BC201 and BC203				
BC212 (c)	Bipolar signal isolator board	356	PMS	1
Accessories for BC204				
BC143	External Heatsink Kit	119	PMS	2
BC215 (c)	Bipolar signal isolator board	165	PMS	3
BC216	Multispeed board for BC204	127	PMS	1
BC218	DIN rail mounting kit	81	PMS	1
Accessories for BC254				
BC245 (c)	Bipolar signal isolator for BC254	351	PMS	1
BC253	Forward-Stop-Brake-Reverse Switch for BC254	44	PMS	1
BC258	Auto-manual Switch for BC254	99	PMS	1
BC259	AC Line Switch for BC254	69	PMS	5

Note: (c) Voltage following mode only.

NEMA enclosed DC control specifications

Features	Catalog Number													
	BC138	BC139	BC140 or BC140-FBR		BCWD140		BC154		BC160		BC254 or BC254-FBR		BC354	
Enclosure	NEMA 1	NEMA 1	NEMA 1		NEMA 4X		NEMA 4X		NEMA 4X		NEMA 4X		NEMA 4X	
Control Type	Reversible		Reversible		Reversible		Reversible		Reversible		Regenerative		Regenerative	
AC Line Input (VAC 50/60Hz)	115	230	115	230	115	230	115	230	115	230	115	230	115	230
Max. AC Load Current (RMS)	5.0	5.0	12.0	12.0	15.0	15.0	15.0	15.0	22	22	15	15	11.5	11.5
Max. AC Load Current (RMS) w/BC143	—	—	16.0	16.0	—	—	—	—	—	—	—	—	—	—
DC Armature Voltage Nominal (VDC)	90	180	90-130	180	90	180	90	180	90	180	90	180	90	180
Max. DC Load Current (ADC)	3.5	3.5	6.0	6.0	10.2	10.2	10.2	10.2	15	15	11	11	7.5	7.5
Max. DC Load Current (ADC) w/ BC143	—	—	12.0	12.0	—	—	—	—	—	—	—	—	—	—
Shunt Field Power Supply (VDC)	50/100	100/200	50/100	100/200	50/100	100/200	50/100	100/200	50/100	100/200	50/100	100/200	50/100	100/200
Maximum Field Current (ADC)	1.0	1.0	1.0	1.0	1.13	1.13	1.0	1.0	1.5	1.5	1.0	1.0	1.0	1.0
Rated Horsepower Range (SCR motor)	1/100 - 1/3	1/50 - 3/4	1/100 - 3/4	1/50 - 1 1/2	1/50 - 1	1/25 - 2	1/50 - 1	1/25 - 2	1.5	3	1/10 - 1	1/5 - 2	1/50 - 3/4	1/25 - 1.5
Rated Horsepower Range (PWM motor)	N/A	N/A	N/A	N/A	N/A	N/A	N/A	N/A	N/A	N/A	N/A	N/A	1/30 - 1	1/20 - 2
Max. Hp with BC143 Ext. Heat Sink	N/A	N/A	1 Hp	2Hp	N/A	N/A	N/A	N/A	N/A	N/A	N/A	NA	N/A	N/A
Ambient Temp Range (°C)	0 - 40	0 - 40	0 - 40		0 - 40		0 - 40		0 - 45		0 - 40		0 - 40	
Ambient Temp Range w/ BC143 (°C)	N/A	N/A	0 - 50		N/A		N/A		N/A		N/A		N/A	
Speed Range (Motor May Be 20:1 Constant Torque)	50:1	50:1	50:1		50:1		50:1		50:1		50:1		50:1	
Adjustable Accel / Decel Time (sec)	0.2 - 10	0.2 - 10	0.2 - 10		0.1 - 15		0.1 - 15		0.1 - 15		0.2 - 15		0.5 - 10	
Min. Speed Adjustable Range (% full speed)	0 - 30	0 -30	0 - 30		0 - 30		0 - 30		0 -30		N/A		N/A	
Max. Speed Adjustable Range (% full speed)	50 - 110	50 - 110	50 - 110		60 - 140		60 - 140		50 - 110		40 - 110		50 - 140	
Current Limit Adjustable Range (%)	0 - 200	0 - 200	0 - 200		0 - 200		0 - 200		0 - 180		0 - 200		0 - 200	
Adjustable Current Limit and Trip Out Type	No	No	No		Timed or Non-Timed		Timed or Non-Timed		Timed or Non-Timed		Timed or Non-Timed		Timed or Non-Timed	
Control Of Speed or Torque	Speed	Speed	Speed		Speed or Torque		Speed or Torque		Speed or Torque		Speed or Torque		Speed or Torque	
IR Compensation Adjustable (VDC)	0 - 24	0 - 24	0 - 24	0 - 48	0 - 15	0 - 30	0 - 15	0 - 30	0 - 30		0 - 15	0 - 30	0 - 15	0 - 30
Tachometer Feedback Input	No	No	No		Yes		Yes		Yes		Yes		Yes	
Plug-In Horsepower Resistor®	Required	Required	Required		N/A		N/A		N/A		N/A		N/A	
UL & cUL Listing, CE	Yes	Yes	Yes		Yes		Yes		Yes		Yes		Yes	
AC Line Fuse	Included	Included	Included		External		External		External		External		External	
DC Armature Fuse	Included with Hp Resistor	Included with Hp Resistor	Included with Hp Resistor		Not supplied with control		Not supplied with control		External		External		External	
Options														
AC Line Switch	Standard	Standard	Standard		Opt-BC159		Opt - BC159		No		Opt - BC159		Opt - BC159	
Forward/Brake/Reverse Switch			(BC140)								(BC254)			
Mechanical	No	No	Opt - BC144		Standard		Opt - BC156		No		Opt - BC253		Opt - BC156	
Electronic	No	No	No		Opt - BC153		Opt - BC153		No		No		Opt - BC153	
Run/Jog Switch	No	No	No		Standard		Opt-BC157		Opt-BC157		No		Opt - BC157	
Input Signal: Current (1-5, 4-20, 20-50mA)	No	No	External Mount Opt - BC145		Internal Mount Opt - BC145		Internal Mount Opt - BC145		Internal Mount Opt - BC145		No		Internal Mount Opt - BC145	
Input Signal: Voltage (0-25, 0-120, 0-550 VDC)	No	No	Opt - BC145		0-5, 0-10 VDC input standard		0-5, 0-10 VDC input standard		0-5, 0-10 VDC input standard		0-5, 0-10 VDC input standard		0-5, 0-10 VDC input standard	
Electrical Connection to Control Barrier Terminal Block	Standard	Standard	Standard		Standard		Standard		Standard		Standard		Standard	
Current Sensing Relay/ Overload Protector	No	No	No		Standard		Standard		Standard		Standard		Standard	
AC Line Filter for CE	Opt -BC24-LF		Opt-BC24-LF		Opt-BC24-LF		Opt-BC24-LF		Opt-BC24-LF		Opt-BC24-LF		Opt-BC24-LF	

NEMA enclosed DC control specifications

Features	Catalog Number											
	BC141	**BC142**	**BC142-5 & BC142-6**		**BC155**	**BC204**		**BC200**		**BC201**		**BC203**
Enclosure	Chassis	Chassis	Chassis		Chassis	Chassis		Chassis		Chassis		Chassis
Control Type	Reversible	Reversible	Reversible		Reversible	Regenerative		Regenerative		Regenerative		Regenerative
AC Line Input (VAC 50/60Hz)	115	230	115	230	230	115	230	115	230	115	230	230
Max. AC Load Current (RMS)	12.0	12.0	12.0	12.0	38.0	12.0	12.0	16.0	16.0	24.0	24.0	38.0
Max. AC Load Current (RMS) w/ BC143	24.0	24.0	24.0	24.0	N/A	16.0	16.0	N/A	N/A	N/A	N/A	N/A
DC Armature Voltage Nominal (VDC)	90	180	90	180	180	90	180	90	180	90	180	180
Max. DC Load Current (ADC)	8.0	8.0	8.0	8.0	26.0	8.0	8.0	11.0	11.0	16.0	16.0	25.0
Max. DC Load Current (ADC) w/ BC143	16.0	16.0	16.0	16.0	N/A	11.0	11.0	N/A	N/A	N/A	N/A	N/A
Shunt Field Power Supply (VDC)	50/100	100/200	50/100	100/200	100/200	50/100	100/200	50/100	100/200	50/100	100/200	100/200
Maximum Field Current (ADC)	1.13	1.13	1.13	1.13	2.5	1.0	1.0	3.0	3.0	3.0	3.0	3.0
Rated Horsepower Range	1/100 - 0.75	1/100 - 1.5	1/100 - 0.75	1/100 - 1.5	5	1/6 - 0.75	1/3 - 1	1/4 - 1	1/2 - 2	1/8 - 1.5	1/4 - 3	5
Max. Hp with BC143 Ext. Heat Sink	1/100 - 1.5	1/50 - 3	1/100 - 1.5	1/50 - 3	N/A	1/6 - 1.5	1/3 - 2	N/A		N/A		N/A
Ambient Temp Range (°C)	0 - 40	0 - 40	0 - 40		0 - 40	0 - 40		0 - 45 (horiz) 0 - 50 (vert)		0 - 45 (horiz) 0 - 50 (vert)		0 - 40
Ambient Temp Range w/ BC143 (°C)	0 - 40	0 - 40	0 - 40		N/A	0 - 40		N/A		N/A		N/A
Speed Range (Motor may be 20:1Constant Torque)	50:1	50:1	50:1		50:1	50:1		50:1		50:1		50:1
Adjustable Accel / Decel Time (sec)	0.2 - 10	0.2 - 10	0.2 - 10		1 - 10	0.1 - 15		0.1 - 15		0.1 - 15		0.5 - 10
Min. Speed Adjustable Range (% full speed)	0 - 30	0 - 30	0 - 30		0 - 30	N/A		N/A		N/A		0 - 30
Max. Speed Adjustable Range (% full speed)	50 - 110	50 - 110	50 - 110		50 - 110	50 - 110		70 - 110		70 - 110		50 - 140
Current Limit Adjustable Range (%)	0 - 200	0 - 200	0 -2 00		0 - 200	0 - 175		1 - 15		1 - 15		0 - 200
Adjustable Current Limit and Tripout Type	Non Timed	Non Timed	Non Timed		Non Timed	Non Timed		Timed		Timed		Timed
Control of Speed or Torque	Speed	Speed	Speed		Speed or Torque	Speed or Torque		Speed or Torque		Speed or Torque		Speed
IR Compensation Adjustment	Yes	Yes	Yes		Yes	Yes		Yes		Yes		Yes
Tachometer Feedback Input	Yes	Yes	Yes		Yes	Yes		Yes		Yes		Yes
Plug-in Horsepower Resistor®	Required	Required	Required		N/A	N/A		N/A		N/A		N/A
UL & cUL Listing, CE	Yes	Yes	Yes		Yes	Yes		Yes		Yes		Yes
AC Line Fuse	Included	Included	Included		External	External		Included		Included		External
DC Armature Fuse	Included with Hp Resistor	Included with Hp Resistor	Included with Hp Resistor		Included with Hp Resistor	External		Included		Included		External
Options												
Input Signal:	Plug on Mount		Plug on Mount		External Mount Opt - BC145	None		None		None		None
Current (4-20mA)	Opt - BC152		Opt - BC152									
Input Signal:	External Mount		External Mount									
Current (1-5, 4-20, 20-50mA)	Opt - BC145		Opt - BC145									
Input Signal:	0-9 VDC		0-9 VDC		0 to 9 VDC	0 to ± 10 VDC		0 to ± 10 VDC		0 to ± 10 VDC		0 to ± 10 VDC
Voltage (must be isolated)	Standard		Standard		Standard	Standard		Standard		Standard		Standard
Input Signal:	Plug on Mount		Plug on Mount		External Mount	±5 to ±25 VDC		±5 to ±250 VDC		±5 to ±250 VDC		±5 to ±250 VDC
Voltage (0-5, 0-10, 1-100, or 0-200 VDC)	Opt - BC152		Opt - BC152									
Input Signal:	External Mount		External Mount		Opt - BC145	Opt - BC215		Opt - BC212		Opt - BC212		Opt - BC212
Voltage (0-25, 0-120, or 0-550 VDC)	Opt - BC145		Opt - BC145									
Push-On Quick Connects	Standard		Standard		None	None		None		None		None
Barrier Terminal Block	Opt - BC147		Opt - BC147									
Regenerative Accel / Decel Board	None	None	None		None	None		Opt - BC211		Opt - BC211		Opt - BC211
AC Line Filter for CE	Opt - BC24-LF		Opt - BC24-LF		Opt - BC24-LF	Opt - BC24-LF		Opt - BC24-LF		Opt - BC24-LF		Opt - BC24-LF

C-Face kits for field conversion

NEMA AC motors

Features:
Complete kits with all hardware necessary for converting Baldor-Reliance® 56 though 449T frame rigid base motors to "C-Face" mounting with base. For factory conversion, refer to the Mod Express® section in this catalog. Please furnish the motor specification number when ordering. NEMA "BA" dimension will be non-standard after conversion on NEMA 143-5T, 182-4T, 213-5T and 254-6T frame motors.

Catalog Number	Description Frame (Baldor-Reliance type)		Enclosure	Bearing	List Price	Disc. Sym.	Ap'x. Shpg. Wgt.
Enclosed – General Purpose							
34-3900T	48C (34)		TEFC	6203	72	SVC	1
34-171	56C (34)		TEFC	6203	72	SVC	2
34-3300FD	56C (34) w/Lip Seal		TEFC	6203	84	SVC	2
34-3903T	143-5TC (34)		TEFC	6205	92	SVC	2
34-3903T-GLD	143-5TC (34)		TEFC	6205	92	SVC	2
35-8762	56C,143-5TC (35)		TEFC	6205	145	SVC	3
35-8762GLD	56C,143-5TC (35)		TEFC	6205	145	SVC	3
35-3304	182-4TC (35)		TEFC	6206	145	SVC	4
35-1300	56C,143-5TC (35)		TEFC	6205	145	SVC	6
35-1300GLD	56C,143-5TC (35)		TEFC	6205	145	SVC	6
35-3300FD	56C, 143-5TC (35) w/lip seal		TEFC	6205	168	SVC	6
35-1325	182-4TC (35)		TEFC	6206	187	SVC	11
35-1325GLD	182-4TC (35)		TEFC	6206	187	SVC	11
36-1037	182-4C (36)		TEFC	6206	166	SVC	8
36-1037GLD	182-4C (36)		TEFC	6206	166	SVC	7
36-3303FD	182-4C (36) w/lip seal		TEFC	6206	192	SVC	8
36-3303FDA	182-4C (36) w/lip seal & eyebolt prevision		TEFC	6206	192	SVC	8
36-3301	182-4TC (36)		TEFC	6206	151	SVC	5
36-3301GLD	182-4TC (36)		TEFC	6206	151	SVC	5
36-1749	182-4TC (36)		TEFC	6206	210	SVC	12
36-3301FD	182-4TC (36) w/lip seal		TEFC	6206	241	SVC	12
36-3301FDA	182-4TC (36) w/lip seal & eyebolt prevision		TEFC	6206	241	SVC	12
36-1749GLD	182-4TC (36)		TEFC	6206	210	SVC	12
37-1304	213-5C, TC (37)		TEFC	6307	233	SVC	12
37-1304GLD	213-5C, TC (37)		TEFC	6307	233	SVC	12
37-3301FD	213-5C, TC (37) w/lip seal		TEFC	6307	268	SVC	12
37-1302	254-6UC, TC (37)		TEFC	6309	354	SVC	18
37-1302GLD	254-6UC, TC (37)		TEFC	6309	354	SVC	18
09-1309GLD	254-6UC, TC (09)	●	TEFC	6309	478	SVC	22
09-1310GLD	284-6UC, TC (09)	●	TEFC	6311	724	SVC	22
10-1304GLD	324-6UC, TC (10)	●	TEFC	6312	586	SVC	32
10-1305GLD	284-6UC, TC (10)	●	TEFC	6311	555	SVC	32
12-1105GLD	324-6UC, TC (12)		TEFC	6312	683	SVC	48
44-1402	404-5UC, TC (44)	**	TEFC	6316 4 & 6 pole	1,319	SVC	120
44-1402GLD	404-5UC, TC (44)	**	TEFC	6316 4 & 6 pole	1,319	SVC	120
44-1403	404-5UC, TSC (44)	**	TEFC	6313 2 pole	1,319	SVC	120
44-1403GLD	404-5UC, TSC (44)	**	TEFC	6313 2 pole	1,319	SVC	120
Severe Duty XT							
09-1309XT	254-6UC, TC (09)	●	TEFC	6309	478	SVC	22
10-1305XT	284-6UC, TC (10)	●	TEFC	6311	555	SVC	32
12-1105XT	324-6UC, TC (12)		TEFC	6312	683	SVC	48
K36G2XT	364-5UC, TC		TEFC	6313	887	SVC	69
K40G71XT	404-5UC, TC G series design		TEFC	6316	2,023	SVC	75
K40G70XT	404-5UC, TC G series design	●	TEFC	6313	2,023	SVC	30
K44G71XT	444-9UC, TC G series design	*	TEFC	6318, 4 & 6 pole	2,144	SVC	249

Note: Specification number of motor should be verified when ordering.
Kits that have catalog numbers ending in "GLD" are for use on Super-E® gold motors.
● = Suitable only for field conversion of motors manufactured with external rabbets on the stator housings.
** = Usable on catalog motors that have footnote #56.
* = Contact your local sales office with nameplate specification number to determine correct kit.
Red catalog number indicates **NEW** product

C-Face kits for field conversion – NEMA AC motors

Catalog Number	Description Frame (Baldor-Reliance type)		Enclosure	Bearing	List Price	Disc. Sym.	Ap'x. Shpg. Wgt.
Severe Duty XEX							
09-1309	254-6UC, TC (09)	●	TEFC	6309	478	SVC	22
09-1310	284-6UC, TC (09)	●	TEFC	6311	724	SVC	22
10-1304	324-6UC, TC (10)	●	TEFC	6312	586	SVC	32
10-1305	284-6UC, TC (10)	●	TEFC	6311	555	SVC	32
12-1105	324-6UC, TC (12)		TEFC	6312	683	SVC	48
K36G2	364-5UC, TC		TEFC	6313	887	SVC	69
K40G71	404-5UC, TC G series design		TEFC	6316	2,023	SVC	75
K40G70	404-5UC, TC G series design	●	TEFC	6313	1,319	SVC	30
K44G70	444-9UC, TC G series design		TEFC	6313	2,023	SVC	40
K44G71	444-9UC, TC G series design	*	TEFC	6318, 4 & 6 pole	2,144	SVC	249
Crusher duty * **							
09-9154CR	254-6TC, Crusher duty		TEFC	6311	531	SVC	22
12-9404CR	324-6TC, Crusher duty		TEFC	6313	798	SVC	48
841XL							
10-1305ECP8	284-6TC, IEEE-841 (10)	●	TEFC	6311	1,086	SVC	32
12-1105ECP8	324-6TC, IEEE-841 (12)		TEFC	6312	1,365	SVC	48
K36G801	364-5TC IEEE-841		TEFC	6313	1,577	SVC	75
K40G802	404-5TC G series design: IEEE-841	●	TEFC	6316	2,092	SVC	30
K40G801	404-5TC G series design: IEEE-841	**	TEFC	6313	2,974	SVC	113
K44G801	444-9UC, TC G series design: IEEE-841		TEFC	6313	3,530	SVC	40
K44G802	444-9UC, TC G series design: IEEE-841	*	TEFC	6318, 4 & 6 pole	2,974	SVC	251
Open							
34-3903A	143-5TC (34)		ODP	6205	88	SVC	2
34-3903A-GLD	143-5TC (34)		ODP	6205	88	SVC	2
35-8764	56C,143-5TC (35)		ODP	6205	145	SVC	3
35-8764GLD	56C,143-5TC (35)		ODP	6205	145	SVC	3
35-1409	182-4TC (35)		ODP	6206	208	SVC	11
35-1409GLD	182-4TC (35)		ODP	6206	208	SVC	11
36-1206A	213-5TC (36)		OPSB	6207	214	SVC	13
36-1206A-GLD	213-5TC (36)		OPSB	6207	214	SVC	13
36-1206B	213-5TC (36)		ODP	6207	225	SVC	14
36-1206B-GLD	213-5TC (36)		ODP	6207	225	SVC	14
36-486	182-4C (36)		ODP	6206	235	SVC	8
36-486GLD	182-4C (36)		ODP	6206	235	SVC	8
36-3403	182-4TC (36)		ODP	6206	140	SVC	5
36-3403GLD	182-4TC (36)		ODP	6206	140	SVC	5
37-1404	213-5C, TC (37)		ODP	6307	308	SVC	14
37-1404GLD	213-5C, TC (37)		ODP	6307	308	SVC	14
37-1402	254-6UC, TC (37)		ODP	6309	332	SVC	18
37-1402GLD	254-6UC, TC (37)		ODP	6309	332	SVC	18
39-3400	254-6UC, TC (39)		ODP	6309	310	SVC	19
39-1403	284-6UC, TC (39)		ODP	6311	510	SVC	21
39-1403GLD	284-6UC, TC (39)		ODP	6311	510	SVC	21
40-1400	284-6UC, TC (40)		ODP	6311	540	SVC	30
40-1400GLD	284-6UC, TC (40)		ODP	6311	540	SVC	30
40-1401	324-6 UC, TC (40)	●	ODP	6312	569	SVC	40
40-1401GLD	324-6 UC, TC (40)	●	ODP	6312	569	SVC	40
42-1300	324-6UC, TC (42)	●	ODP	6312	911	SVC	36
42-1300GLD	324-6UC, TC (42)	●	ODP	6312	911	SVC	36
42-1400	364-5UC, TC (42)	●	ODP	6313	886	SVC	30
42-1400GLD	364-5UC, TC (42)	●	ODP	6313	886	SVC	30
44-1403A	404-5USC, TSC (44)		ODP	6316	1,025	SVC	40
44-1403A-GLD	404-5USC, TSC (44)		ODP	6316	1,025	SVC	40

Note: Specification number of motor should be verified when ordering.
Kits that have catalog numbers ending in "GLD" are for use on Super-E® gold motors.
● = Suitable only for field conversion of motors manufactured with external rabbets on the stator housings.
*** = For Crusher duty frames 360 and above, use Severe duty kits.
** = Usable on catalog motors that have footnote #56.
* = Contact your local sales office with nameplate specification number to determine correct kit.

C-Face kits for field conversion

NEMA DC SCR drive motor

Features: For non-laminated frame DC motors with catalog numbers ending in “P”.

Catalog Number	Frame	Bearing	Enclosure	List Price	Disc. Sym.	Ap’x. Shpg. Wgt.
180-5002	180ATC	6206	Drip-Proof	1,097	SVC	18
210-5001	210ATC	6207	Drip Proof or Totally Enclosed	1,449	SVC	12
250-5001	250ATC	6209	Drip Proof of Totally Enclosed	2,026	SVC	75
280-5002	280ATC	6210	Drip Proof	2,846	SVC	57
320-5002	320ATC	6211	Drip Proof	3,742	SVC	87

Double C-Face motor brake kits

Coil voltage: 115/208-230

Features: Double C-Face coupler brakes.
Mounts on motors with C-Face, provides NEMA C-Face mounting on brake.
Spring set, electrically released.

Brake Rating	Brake Mounting	Catalog Number	List Price	Disc. Sym.	Ap’x. Shpg. Wgt.
3 ft-lb	56C	**CBK003-1**	813	SVC	12
6 ft-lb	56C	**CBK006-1**	1,197	SVC	12
6 ft-lb	145TC	**CBK006-2**	1,197	SVC	12
10 ft-lb	145TC	**CBK010-1**	1,397	SVC	12
15 ft-lb	145TC	**CBK015-1**	2,096	SVC	12

Conduit box kits

Frame Size	Catalog Number	List Price	Disc. Sym.	Ap'x. Shpg. Wgt. Lbs.
Conduit box kit – standard size				
42	**33CB5000A01SP**	49	SVC	1
48	**34CB5001A01SP**	47	SVC	1
48	**34CB5001A01SP-GLD**	47	SVC	1
56 - 143-5T	**35CB5001A01SP**	51	SVC	1
56 - 143-5T	**35CB5001A01SP-GLD**	51	SVC	1
182T-4T	**36CB5001A01SP**	55	SVC	1
182T-4T	**36CB5001A01SP-GLD**	55	SVC	1
182T-4T	**36CB5001A06SP**	60	SVC	2
182T-4T	**36CB5001A06SP-GLD**	60	SVC	2
182T-4T	**36CB5001A07SP**	85	SVC	2
213T-5T	**37CB5002A06SP**	60	SVC	3
213T-5T	**37CB5002A06SP-GLD**	60	SVC	3
213T-5T	**37CB5002A07SP**	60	SVC	4
213T-5T	**37CB5002A07SP-GLD**	60	SVC	4
184T,215T,254-6	**09CB5001A01SP**	100	SVC	3
184T,215T,254-6	**09CB5001A01SP-GLD**	100	SVC	3
184T,215T,254-6	**09CB5001A15SP**	84	SVC	3
184T,215T,254-6	**09CB5001A15SP-GLD**	84	SVC	3
254-6T,284-6,324-6	**10CB5001A01SP**	145	SVC	6
254-6T,284-6,324-6	**10CB5001A01SP-GLD**	145	SVC	6
254-6T,284-6,324-6	**10CB5002A01SP**	160	SVC	4
254-6T,284-6,324-6	**10CB5002A01SP-GLD**	160	SVC	4
360T - Cast Iron	**K36G8**	443	SVC	22
400T - Cast Iron	**K40G8**	443	SVC	35
440T - Cast Iron	**K44G8**	456	SVC	55
56-143-5T	**35CB5016WWSP**	43	SVC	1
182T-4T	**36CB5016WWSP**	69	SVC	2
213T-5T	**37CB5016WWSP**	80	SVC	4
254T-56T	**39CB5016WWSP**	182	SVC	5
Conduit box kit – oversize				
360T - Cast Iron	**K36G9**	456	SVC	25
400T - Cast Iron	**K40G9**	456	SVC	30
440T - Cast Iron	**K44G9**	541	SVC	135

Red catalog number indicates **NEW** product
WWSP in the Catalog Number indicates white washdown

Frame Size	Catalog Number	List Price	Disc. Sym.
Auxiliary conduit box kits			
440	**K44G5**	914	SVC

D-Flange kits

Complete kit with hardware necessary for converting either foot mount or C-Face 143T thru 326T motors to D-Flange mounting. Please note that using these kits to modify the 143T thru 184T foot mounted motors will result in a non-standard NEMA BA dimension. Modified C-Face motors will have standard BA dimensions.

Please furnish the motor specification number when ordering.

NEMA Frame	Enclosure	Catalog Number	List Price	Disc. Sym.	Ap'x. Shpg. Weight Lbs.
143-145T (1)	TEFC	**35EP1506A01SP**	298	SVC	8
182-184T (2)	TEFC	**36EP1304A62SP**	334	SVC	15
286-286 U,T	TEFC	**10EP1502A01SP**	706	SVC	39
324-326 U,T	TEFC	**12EP1501A03SP**	1,218	SVC	50

Notes:
(1) 143T-145T foot mount motor modified with kit 35EP1506A01SP will have Non-standard NEMA BA dimension of 2.25".
(2) 182T-184T foot mount motor modified with kit 36EP1304A62SP will have Non-standard NEMA BA dimension of 2.75".

Drain fitting kit
TEFC motors 48 thru 215T

Applications: Increase general purpose IP44 enclosures to IP54 protection level by installing drain plugs in motor weep hole drains.

Features: Kit consists of quantity (2) plastic push in drain fittings and instructions for proper installation. Can be installed in steel band and cast iron frame motors.

Catalog Number	List Price	Disc. Sym.	Ap'x. Shpg. Weight Lbs.
HA5027A03	12	SVC	1

Drip covers for field conversion
Standard ODP motors to vertical mount

Features: Complete kits with all hardware, attaches to endplate with no drilling. Designed to protect open steel band motors from rain, snow and ice when mounted outdoors in a vertical position. Primed and painted inside and out.

For a factory conversion, refer to the Mod Express® section in this catalog.

Catalog Number	Frame	List Price	Disc. Sym.	Ap'x. Shpg. Wgt.
FCD34	48-56, Type 34	114	SVC	1
FCD35 *	56-145T, Type 35 (plastic)	30	SVC	1
FCD35M *	56-145T, Type 35 (metal)	114	SVC	2
FCD36	182T-184T, Type 36	139	SVC	2
FCD37	213T-256T, Type 37	168	SVC	3
FCD39	254T-256T, Type 39	225	SVC	3
FCD40	284-286, Type 40	334	SVC	12
FCD42	324-326, Type 42	334	SVC	5

Note: * FCD35 is plastic. FCD35M is the metal version.

Drip covers for field conversion
Standard TEFC motors

Features: Complete Drip cover assembly including fan cover. Primed and painted Super E gold inside and out.

For a factory conversion, refer to the Mod Express * section of this catalog.

Catalog Number	Frame	List Price	Disc. Sym.	Ap'x. Shpg. Wgt.
FCD34TEFC	48-56, Type 34, GP & XP	134	SVC	1
FCD35TEFC	56-145T, Type 35, GP & XP	182	SVC	1
FCD36TEFC	182T-184T, Type 36, GP	196	SVC	2
FCD37TEFC	213T-256T, Type 37, GP	200	SVC	2

Red catalog number indicates **NEW** product.

NEW!

Cast iron fan cover for field conversion

Standard TEFC cast iron motors

Applications: For cast iron construction.

Features: Complete kits consists of cast iron fan covers and all necessary mounting hardware. These kits replace the standard steel fan cover when used.

For a factory conversion, refer to the Mod Express® section in this catalog.

Catalog Number	Description	List Price	Disc. Sym.	Ap'x. Shpg. Wgt.
FFC05	05/143-5T	181	SVC	6
K18G8 **	06/182-4T E Line	194	SVC	10
K18G9 **	07/213-5T E Line	194	SVC	15
FFC09	09/254-6U & T	268	SVC	20
K18G10 **	09/254-6T E Line	241	SVC	20
K18G11 **	10/324-6T E Line	241	SVC	25
K18G12 **	12/364-5T E Line	255	SVC	35
FFC18 **	404-5T E Line	400	SVC	90
FFC19 **	444-9T E Line	479	SVC	120

Notes: ** Contact your local sales office with nameplate specification number to determine correct kit.
Not available on 280 frame due to replacement of bearing, endplate, and mounting configuration.
Cast iron frame

Cast iron fan cover and conduit boxes for field conversion

Standard TEFC cast iron motors

Applications: For all cast iron construction.

Features: Complete kits consists of cast iron fan covers and cast iron conduit boxes when necessary. The kits also include all necessary mounting hardware. These kits replace the standard steel fan cover and aluminum conduit box when used.

For a factory conversion, refer to the Mod Express section in this catalog.

Catalog Number	Description	List Price	Disc. Sym.	Ap'x. Shpg. Wgt.
FFC07WB	07/213-5T	286	SVC	19
FFC09WB	09/254-6U & T	393	SVC	28
K36G50	360T	1,656	SVC	123

Notes: Not for use on explosion proof motors.
Cast iron frame

Adjustable motor bases

These motor bases simplify mounting and belt tension adjustment at installation and during later maintenance checks. These are heavy duty adjustable motor bases manufactured of steel or plate. All bases are detergent washed, painted with dark gray primer and oven baked for corrosion resistance. The nuts and bolts are zinc plated. NEMA 215T and smaller bases feature one adjusting screw. Bases for NEMA 254T frame and larger motors feature two adjusting screws. Motor mounting bolts are included. Bases listed can be used with motor frame numbers given and succeeded by the letters S, T, U, US and TS, or any other letter combinations provided the motors' base meets NEMA standards.

NEMA Frame Motors	Base Catalog Number	List Price	Disc. Sym.	No. of Adjusting Screws	Motor Mounting Bolt Size	Ap'x Shpg. Wgt.
48	**B48T**	129	SVC	1	5/16 x 1	3
56	**B56T**	129	SVC	1	5/16 x 1	5
143T	**B143T**	166	SVC	1	5/16 x 1	6
145T	**B145T**	166	SVC	1	5/16 x 1	7
182T	**B182T**	176	SVC	1	3/8 x 1 1/2	10
184T	**B184T**	176	SVC	1	3/8 x 1 1/2	10
213T	**B213T**	204	SVC	1	3/8 x 1 1/2	14
215T	**B215T**	204	SVC	1	3/8 x 1 1/2	15
254T	**B254T**	335	SVC	2	1/2 x 1 3/4	21
256T	**B256T**	335	SVC	2	1/2 x 1 3/4	21
284T	**B284T**	381	SVC	2	1/2 x 2	24
286T	**B286T**	381	SVC	2	1/2 x 2	24
324T	**B324T**	589	SVC	2	5/8 x 2 1/2	34
326T	**B326T**	589	SVC	2	5/8 x 2 1/2	37
364T	**B364T**	733	SVC	2	5/8 x 2 1/2	48
365T	**B365T**	733	SVC	2	5/8 x 2 1/2	50
404T	**B404T**	1,090	SVC	2	3/4 x 3	62
405T	**B405T**	1,090	SVC	2	3/4 x 3	66
444T	**B444T**	1,332	SVC	2	3/4 x 3	70
445T	**B445T**	1,332	SVC	2	3/4 x 3	71
447T	**B447T**	1,570	SVC	2	3/4 x 3 1/2	93
449T	**B449T**	1,570	SVC	2	3/4 x 3 1/2	99

Notes: Bases not suitable for vertical mounting. **See base dimensions on next page.**

Bushing kit

Reduce bore size of Quill type input shaft from 7/8 to 5/8.
Sintered metal bushing with integral internal and external keys.

Catalog Number	List Price	Disc. Sym.
133-6FbA	84	SVC

Adjustable motor bases dimension diagrams

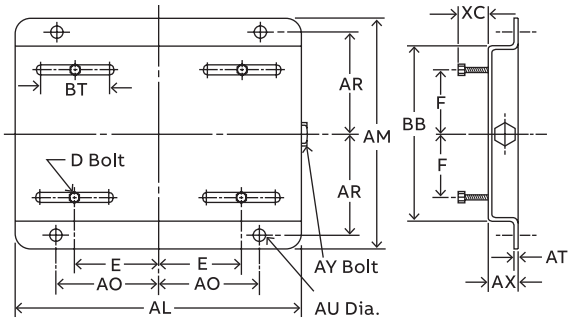

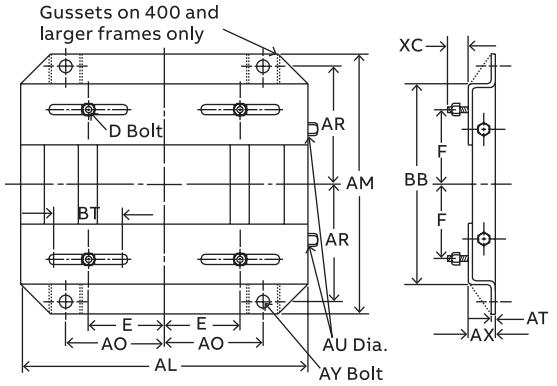

NEMA Frame	Catalog Number	E	F	AL	AM	AO	AR	AT	AU	AX	BB	BT	XC	D Bolt	AY Bolt
48	**B48T**	2.125	1.375	10.00	6.25	3.50	2.75	0.078	0.375	1.125	4.25	3.00	0.875	5/16 x 1	3/8 x 4
56	**B56T**	2.437	1.50	10.625	6.50	3.812	2.875				4.50				
143	**B143T**	2.75	2.00	10.50	7.50	3.75	3.375	0.109	0.375	1.125	5.50	3.00	0.812	5/16 x 1	3/8 x 4
145	**B145T**		2.50		8.50		3.875				6.50				
182	**B182T**	3.75	2.25	12.75	9.50	4.50	4.25	0.140	0.50	1.50	6.50	3.00	1.50	3/8 x 1-3/4	1/2x 5
184	**B184T**		2.75		10.50		4.75				7.50				
213	**B213T**	4.25	2.75	15.00	11.00	5.25	4.75	0.156	0.50	1.75	7.50	3.50	1.50	3/8 x 1-3/4	1/2 x 5
215	**B215T**		3.50		12.50		5.50				9.00				
254	**B254T**	5.00	4.125	17.75	15.125	6.25	6.625	0.187	0.625	2.00	10.75	4.00	1.437	1/2 x 1-3/4	5/8 x 6
256	**B256T**		5.00		16.875		7.50				12.50				
284	**B284T**	5.50	4.75	19.75	16.875	7.00	7.50	0.187	0.625	2.00	12.514	4.50	1.687	1/2 x 2	5/8 x 6
286	**B286T**		5.50		18.375		8.25								
324	**B324T**	5.25	5.256	22.75	19.25	8.00	8.50	0.187	0.75	2.50	14.00	5.25	2.187	5/8 x 2-1/2	3/4 x 9
326	**B326T**	6.00			20.75		9.25				15.50				
364	**B364T**	7.00	5.625	25.50	20.50	9.00	9.125	0.25	0.75	2.50	15.50	6.00	2.062	5/8 x 2-1/2	3/4 x 9
365	**B365T**		6.625		21.50		9.625				16.50				
404	**B404T**	8.00	6.125	28.75	22.375	10.00	9.875	0.25	0.875	3.00	16.50	7.00	2.50	3/4 x 3	3/4 x 11
405	**B405T**		6.387		23.875		10.625				18.00				
444	**B444T**	9.00	7.25	31.25	24.625	11.00	11.00	0.25	0.875	3.00	19.25	7.50	2.50	3/4 x 3	3/4 x 11
445	**B445T**		8.25		26.625		12.00				21.25				
447	**B447T**	9.00	10.00	31.25	30.125	11.00	13.75	0.312	1.125	3.00	24.75	7.50	3.00	3/4 x 3-1/2	3/4 x 14
449	**B449T**		12.50		35.125		16.25				29.75				3/4 x 11

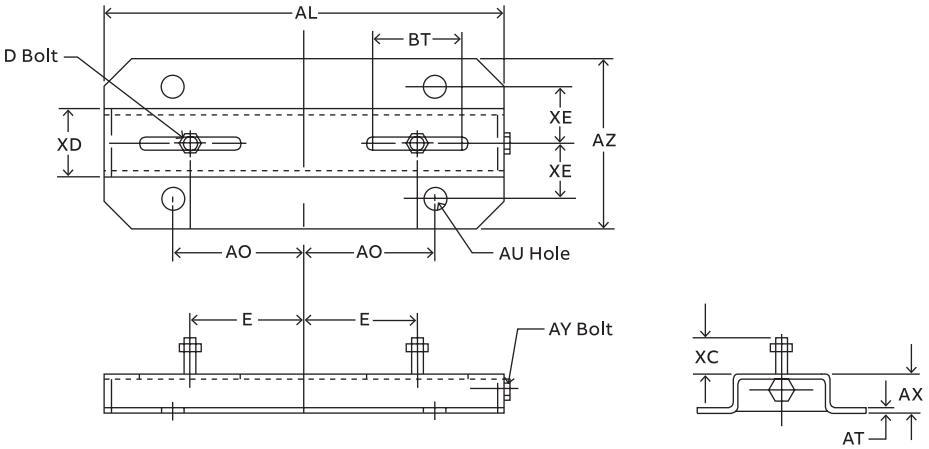

NEMA Frame	Catalog Number	E	AL	AO	AL	AU	AX	AZ	BT	XC	XO	XE	D Bolt	AY Bolt
G5000	**B5000RLS** (1)	10.00	35.00	12.50	0.312	1.00	3.50	12.00	8.00	3.00	6.00	4.50	7/8 x 3-1/2	7/8 x 16

(1) One adjustable motor rail
Dimensions are for reference only.
Consult your local sales office for certified dimensions.

Conversion bases

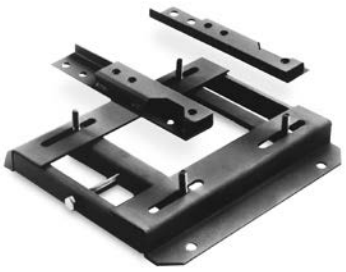

Consisting of right and left hand pieces that fit to existing mounting studs. The "T" frame motor is mounted to the pieces resulting in compensation for the difference in motor height, shaft position and mounting hole.

Catalog Number	Converts From "U" Frame	Converts To "T" Frame	List Price	Disc. Sym.	Ap'x Shpg. Wgt.	Height Inches	Width Inches	Length Inches	Thread
CB1814T	182/184	143T/145T	166	SVC	2	1	2 1/4	7 1/2	5/16-18
CB2118T	213/215	182T/184T	196	SVC	2	3/4	1 3/4	9 1/2	3/8-16
CB2521T	254U/256U	213T/215T	225	SVC	6	1	2 7/16	12 3/4	3/8-16
CB2825T	284U/286U	254T/256T	304	SVC	7	3/4	2 3/4	14 1/4	1/2-13
CB3228T	324U/326U	284T/286T	420	SVC	9	1	3 1/4	15 3/4	1/2-13
CB3632T	364U/365U	324T/326T	517	SVC	12	1	3 11/16	16 1/2	5/8-11
CB4036T	404U/405U	364T/365T	709	SVC	20	1	4 1/4	18 5/8	5/8-11
CB5049T	505U	449T	3,960	SVC	164	1.50	6.00	29.00	3/4-10

Notes: Dimensions are for one piece. Two pieces supplied.
Design is for horizontal mounting. Motor shimming may be required for direct drive applications.

Conversion bases dimension diagrams

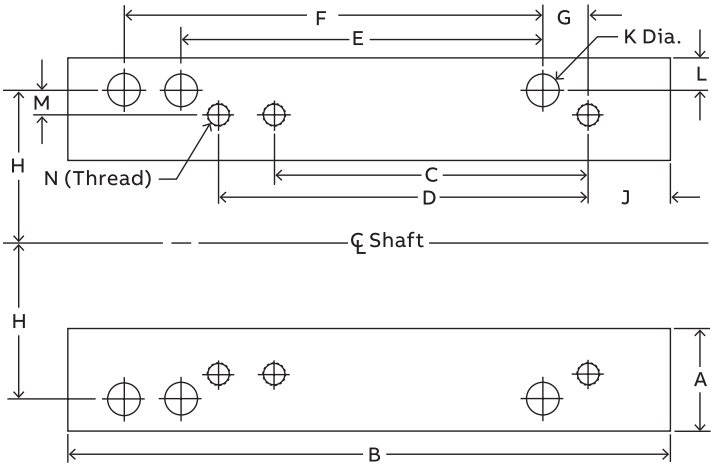

Catalog Number	Converts From	Converts To	A	B	Height	C	D	E	F	G	H	J	K	L	M	N (Thread)
CB1814T	182-184	143T-145T	2.25	7.50	1.00	4.00	5.00	4.50	5.50	0.50	3.75	1.00	0.437	0.50	1.0	5/16-18
CB2118T	213-215	182T-184T	1.75	8.50	0.75	4.50	5.50	5.50	7.00	1.00	4.25	1.00	0.437	0.437	0.5	3/8-16
CB2521T	254U-256U	213T-215T	2.437	12.75	1.00	5.50	7.00	8.25	10.00	1.125	5.00	1.00	0.562	0.625	0.75	3/8-16
CB2825T	284U-286U	254T-256T	2.75	14.25	0.75	8.25	10.00	9.50	11.00	1.375	5.50	1.25	0.562	0.937	0.5	1/2-13
CB3228T	324U-326U	284T-286T	3.25	15.75	1.00	9.50	11.00	10.50	12.00	1.50	6.25	1.50	0.687	0.937	0.75	1/2-13
CB3632T	364U-365U	324T-326T	3.687	16.50	1.00	10.50	12.00	11.25	12.25	1.75	7.00	1.75	0.687	1.187	0.75	5/8-11
CB4036T	404U-405U	364T-365T	4.25	18.625	1.00	11.25	12.25	12.25	13.75	2.00	8.00	2.00	0.812	1.25	1.0	5/8-11
CB5744T	449T	586/587	6.50	36.75	3.50	25.00	32.00	22.00	25.00	2.50	–	3.5	1.19	2.00	2.50	–
CB5049T	505U	449T	6.00	29.00	1.50	25.00	–	18.00	–	2.188	9.00	2.00	0.94	2.00	1.00	3/4-10

Notes: For all other dimensions, please reference chart above and confirm base and motor will work in your application.

ABB Motors and Generators PG Service

Base Service

Installation and commissioning:

Getting it completely right from very start for ABB High Voltage motors and Generators. We provide commissioning engineers with extensive experience in motors and generators. Their know-how, backed by the expertise of our design team, makes commissioning fast and smooth and lays the foundation for high reliability and efficiency.

Key benefits:

- Work carried out by skilled personnel only
- Safe, controlled start-up methodology
- Clearly defined procedures (eg, alignment protocol)
- Standard reporting and recording of parameters
- Faster installation and commissioning
- Improved process operation for optimized cost of ownership
- Increased reliability, efficiency and safety

More info: https://new.abb.com/motors-generators/service/installation-and-commissioning

ABB Motors and Generators PG Service

Preventive Maintenance

Unplanned stoppages always seem to occur at the worst possible moment. The preventive maintenance program for ABB Motors and Generators cuts the risk of unscheduled downtime.

The program takes a step-by-step approach with procedures undertaken at intervals over the lifetime of the equipment. The exact timetable will be based on the operating profile and methods as well as ambient conditions. Preventive maintenance is an investment in the avoidance of failures – the program can eliminate disruptions to production and customers to secure their long-term competitiveness.

Key benefits:

- Maintenance planned around production and plant schedules
- Minimize unplanned downtime
- Reduce or eliminate loss of production
- Reduce overall cost of maintenance
- Warranty protection

More info: https://new.abb.com/motors-generators/service/maintenance/preventive-maintenance

Air Gap Inspection

Carries out internal inspection of large Synchronous motors and generators without taking the rotor out to plan and support maintenance optimization.

The robotic crawler moves in the air gap between the stator and rotor, traversing the stator core laminations using modular, magnetic tracks. It can be used in all motors and generators with air gaps of 10 mm and upwards. Unlike conventional inspection devices, which are restricted to turbo/hydro generators with very large air gaps, ABB Air Gap Inspector can be used on all large synchronous motors and generators with air gaps of 10 mm or more.

Key benefits:

- Reduces costs. Inspections can be carried out without removing the rotor, reducing outage costs. Faults can be localized, and their position and severity identified and recorded without removal of the rotor.
- Optimizes maintenance planning and increases availability of motors and generators by reducing the number of outage days where rotor removal is required.

More info: https://new.abb.com/motors-generators/service/advanced-services/abb-air-gap-inspector

ABB Motors and Generators PG service

Spares and Consumables

ABB's motors and generators often play a critical role in the plants in which they operate.

In many cases the complete process would be brought to a halt if the motor or generator stopped working. Downtime may result in considerable costs in terms of lost production, waste and damage, so the availability of this equipment is a top priority.

We supply genuine spare parts, spare part packages and maintenance kits for all ABB motors and generators. We can also provide exchange units for wind power generators. As we are the original equipment manufacturer, you can rely on us to supply the correct part. Where technology has advanced, we may be able to provide a part that is even better than the original. We can also help you to rationalize your on-site spare part stocks.

Key benefits:

- All necessary parts available from a single source
- Access to original parts
- Expert support in identifying parts based on equipment condition and criticality
- Increased availability and minimized downtime

More info: https://new.abb.com/motors-generators/service/spares-and-consumables

Replacements

Replacing existing equipment with a new ABB product is a great investment: the new unit's superior efficiency and performance can ensure a very short payback time. Whether you select a new motor or generator from our wide range of standard items or choose a tailor-made unit, we can generally optimize it to replace your existing equipment.

In most cases we will be able to adapt the electrical designs to make the replacement fully interchangeable with the original. Utilizing our know-how and experience, we can easily provide replacements for third party products.

For the plant operator this helps to minimize the downtime, required site work and risks. An added benefit of a tailor made, fully interchangeable replacement is that you may be able to keep your existing machine as a spare.

Key benefits:

- Expert support in selecting replacement units
- Option of choosing from standard products, tailor made units and replicas
- Access to original drawings and specifications for ABB products
- Replacement programs for third-party products
- Option to select based on energy calculations
- Access to latest technology
- Reduced life cycle costs
- Increased reliability, availability and safety

More info: https://new.abb.com/motors-generators/service/replacements

ABB Ability™ Advanced Services

ABB Ability™ Condition Monitoring for LV Motors

ABB Smart Sensor converts motor into a smart device to let you know when it is time for service. The Smart Sensor can be easily attached to motors without the need for wiring. It collects operational data and health information of the motor.

Key benefits:

- By monitoring and analyzing data on motor operating parameters
  - maintenance and operation can be optimized
  - unexpected downtime avoided
  - efficiency optimized
  - motor lifetime extended
- Improved safety – enables easy access to motors in locations that are difficult or dangerous to access

More info: https://new.abb.com/motors-generators/service/advanced-services/smart-sensor

ABB Ability™ Condition Monitoring for Pumps

Remote monitoring of pumps is enabled through ABB Smart Sensors making predictive maintenance possible. It monitors the vital operating parameters of the pump, such as vibration and temperature, to calculate pump health indicators. These indicators provide valuable information on the pump's condition and performance.

Key benefits:

- Early identification of pump inefficiencies
- Prevention of unexpected downtime
- Reduced maintenance costs
- Longer equipment lifetime
- Improved safety – enables easy access to pumps in locations that are difficult or dangerous to access

More info: https://new.abb.com/motors-generators/service/advanced-services/smart-sensor

ABB Ability™ Advanced Services

Standard Performance Smart Sensors for motors

Part number	Description	Application
EM5001A07SP	Standard performance motor Smart Sensor for hazardous areas with Aluminium bracket mounting tool. Does not include subscription	Finned/rib cooled motor
EM5001A08SP	Standard performance Motor Smart Sensor for hazardous areas with flat mount mounting tool. Does not include subscription	Finless/round steel motor
3AFP9234758	Standard performance motor Smart Sensor without mounting hardware and subscription	

High Performance Smart Sensors for motors

Part number	Description	Application
3AFP9234751	High performance Motor Smart Sensor for hazardous areas with Aluminium bracket mounting tool. Does not include subscription	Finned/rib cooled motor
3AFP9225986	High performance Motor Smart Sensor for hazardous areas with flat mount mounting tool. Does not include subscription	Finless/round steel motor
3AFP9234757	High performance Motor Smart Sensor for hazardous areas without mounting tool and subscription	

Mounting hardware – Standard and High Performance motor Smart Sensors

Part number	Description	Application
3AFP9253863	Aluminium bracket mounting hardware for finned/ rib cooled motor	Finned/rib cooled motor
3AFP9253862	Flat mounting hardware for rolled steel motor/pump	Finless/round steel motor

Subscription – Standard and High Performance motor Smart Sensors

Part number	Description	Application
3AFP9191436	2 year subscription	
3AFP9127707	1 year subscription	

Subscription – High Performance motor Smart Sensors

Part number	Description	Application
3AFP9253864	5 year subscription	

Smart Sensor Gateway

Part number	Description	Application
EM5001GW	Smart Sensor Gateway (common for all smart sensors)	

ABB Ability™ Advanced Services

ABB Ability™ Condition Monitoring for HV Motors

Remote condition monitoring service that delivers on-line assessment of HV motor health and performance to maximize uptime and productivity. Web access to live data and status information of electrical and mechanical parameters.

Key benefits:

- Increased reliability and availability
- Minimizes the number of unexpected failures
- Reduces downtime by transitioning from reactive to proactive maintenance
- Reduced maintenance costs
- Saves maintenance time and effort with early warnings

Part number	Description
3BSM045700-A	Hardware
3BSM045708-1	1 Year subscription
3BSM045705-1	3 Year subscription

More info: https://new.abb.com/motors-generators/service/advanced-services/remote-condition-monitoring

ABB Ability™ Condition Monitoring for Shaft Lines

Periodic on-site condition monitoring for induction motors, generators, gearboxes and any driven object in order to find potential mechanical and electrical problems in an early stage.

Key benefits:

- Integrated analysis and reporting
- Current, voltage and vibration in one analysis and reporting system
- Quick maintenance oriented reports
- Automated analysis and summary report delivered on site
- Reduction in unplanned downtime
- Early warning system provides adequate time for maintenance planning
- ABB motor service network
- High success rate of fault detection

More info: https://new.abb.com/motors-generators/service/advanced-services/on-site-condition-monitoring

ABB Ability™ Advanced Services

ABB Ability™ LEAP for HV Motors and Generators

ABB Ability™ LEAP (Life Expectancy Analysis Program) analyzes the condition and expected lifetime of stator winding insulation – the most uptime critical component in high voltage motors and generators.

ABB Ability™ LEAP is a set of unique analytical tools that identify, characterize and quantify defects in the insulation system. Testing and analysis are performed with one site visit and can be combined with normal maintenance activities. This is a big improvement on conventional methods that require trending data from a range of measurements before they can provide useful output.

Key benefits:

- Minimized unplanned downtime - early warnings provide adequate time for maintenance planning
- Optimized maintenance planning – enables you to move from time-based to condition-based maintenance
- Reduced cost of ownership (COO) – supports efforts to extend lifetime and thereby increase return on investment (ROI)
- Better decision-making – facilitates decision-making on short and long-term maintenance and run/repair/retrofit/replace options
- Service is available for all motors and generators regardless of manufacturer

More info:
https://new.abb.com/motors-generators/service/advanced-services/abb-ability-leap-for-hv-motors-and-generators

ABB Ability™ Condition Assessment for Motors and Generators

Condition assessment of stator winding insulation in motors and generators up to 4 kV. The results are used to optimize the maintenance routine and predict when the system's condition will become vulnerable or critical. Based on this, specific service actions can be planned well in advance to avoid premature failure and increase the lifetime of motors and generators.

Key benefits:

- High uptime – early detection of potential problems before they can cause costly unplanned downtime
- Accurate information on equipment condition to be able to make informed run/repair/replace decisions
- Maintenance activities can be prioritized and optimized

More info:
https://new.abb.com/motors-generators/service/advanced-services/abb-ability-leap-for-hv-motors-and-generators

ABB Ability™ Advanced Services

ABB Ability™ Predictive Maintenance for Generators

- Higher uptime with optimized maintenance planning.
- ABB Ability™ Predictive Maintenance for generators optimizes the maintenance of diesel and gas engine generators. Taking a condition-based approach, it combines customer input with advanced analytical techniques to create the optimal condition monitoring and surveillance program. This ensures that the right actions are taken at the right time and for the right reasons.
- ABB Ability™ Predictive Maintenance brings together ABB's condition monitoring, in-situ visual inspection and life expectancy analysis program to make maintenance planning easy.

Key benefits

- Higher uptime
- Minimized unplanned outages
- Longer intervals between rotor removals
- Avoidance of secondary damages
- Alignment of maintenance tasks with planned plant stoppages
- Reduced maintenance costs
- Maintenance is only done when necessary
- Parts are only replaced when needed
- Visual inspection of stator core, rotor core and windings is done without the need to remove the rotor

More info:
https://new.abb.com/motors-generators/service/advanced-services/abb-ability-predictive-maintenance-for-generators

Industrial Grinders

7306

7306D

Features:
Cast iron exhaust type wheel guards.
8-foot power cord.
Base mounted on/off switch.
Rubber feet to minimize vibration.

Hp	RPM	Wheel Size	Catalog Number	List Price	Disc. Sym.	Shpg. Wgt.	Voltage	Style	Agency Approval	Notes
1/2	3600	7"x1"x5/8"	**712**	1,124	GBX	45	115	Grinder	UL, CSA	a,c,f,p
1/2	3600	7"x1"x5/8"	**762**	1,124	GBX	43	115	Grinder/Buffer	UL, CSA	b,c,f,p
1/2	3600	7"x1"x5/8"	**712E**	1,314	GBX	68	115	Grinder	UL, CSA	a,c,p
1/2	3600	7"x1"x5/8"	**762E**	1,314	GBX	68	115	Grinder/Buffer	UL, CSA	b,c,p
1/2	1800	7"x1"x5/8"	**7306**	1,424	GBX	70	115/230	Grinder	UL	a,d,g,p
1/2	3600	7"x1"x5/8"	**7307**	1,424	GBX	70	115/230	Grinder	UL, CSA	a,d,g,p
1/2	3600	7"x1"x5/8"	**7351**	1,424	GBX	67	115/230	Grinder/Buffer	UL, CSA	b,d,g,p
1/2	1800	7"x1"x5/8"	**7308**	1,424	GBX	71	208-230/460	Grinder	UL, CSA	a,d,h,p
1/2	3600	7"x1"x5/8"	**7309**	1,424	GBX	72	208-230/460	Grinder	UL, CSA	a,d,h,p
1/2	1800	7"x1"x5/8"	**7306D**	1,791	GBX	84	115/230	Grinder	UL	a,d,e,g
1/2	3600	7"x1"x5/8"	**7307D**	1,791	GBX	84	115/230	Grinder	UL	a,d,e,g
1/2	3600	7"x1"x5/8"	**7309D**	1,791	GBX	87	208-230/460	Grinder	UL, CSA	a,d,e,h
1/2 1/3	1800	7"x1"x5/8"	**7312D**	2,166	GBX	90	115	Grinder	UL	a,d,e

Exercise caution – wear safety glasses and a mask

Notes:
(a) Supplied with 36 & 60 grit wheels.
(b) Supplied with 36 grit and 0.014 wire wheel.
(c) Stamp steel tool rests.
(d) Cast iron tool rests.
(e) Deluxe model includes water pot, tool tray and lighted eyeshields.
(f) Non-exhaust type wheel guards.
(g) Factory connected for 115 volts, power cord supplied.
(h) Factory connected for 208-230 volts, no power cord.
(p) Supplied with eye shield.

WARNING: Grinding Certain materials, such as lead based painted parts, can expose you to dust that may contain chemicals which are known to the state of California to cause cancer, birth defects or other reproductive harm. For more information go to www.P65Warnings.ca.gov.

Industrial Grinders

8100W

8100WD

All models have cast iron tool rests and exhaust type wheel guards.
8-foot power cord.
Base mounted on/off switch.
Rubber feet to minimize vibration.

Hp	RPM	Wheel Size	Catalog Number	List Price	Disc. Sym.	Shpg. Wgt.	Voltage	Style	Agency Approval	Notes
3/4	1800	8"x1"x3/4"	**8100W**	2,156	GBX	99	115/230	Grinder	UL	a,g,p
3/4	1800	8"x1"x3/4"	**8100WD**	2,459	GBX	110	115/230	Grinder	UL	a,e,g
3/4	3600	8"x1"x3/4"	**8107W**	2,156	GBX	99	115/230	Grinder	UL	a,g,p
3/4	3600	8"x1"x3/4"	**8107WD**	2,459	GBX	111	115/230	Grinder	UL	a,e,g
3/4	3600	8"x1"x3/4"	**8250W**	2,156	GBX	97	115/230	Grinder/Buffer	UL	b,g,p
3/4	1800	8"x1"x3/4"	**8102W**	2,087	GBX	98	208-230/460	Grinder	UL, CSA	a,h,p
3/4	1800	8"x1"x3/4"	**8102WD**	2,420	GBX	111	208-230/460	Grinder	UL, CSA	a,e,h
3/4	3600	8"x1"x3/4"	**8123W**	2,087	GBX	99	208-230/460	Grinder	UL, CSA	a,h,p
3/4	3600	8"x1"x3/4"	**8123WD**	2,420	GBX	112	208-230/460	Grinder	UL, CSA	a,e,h
3/4	3600	8"x1"x3/4"	**8252W**	2,087	GBX	95	208-230/460	Grinder/Buffer	–	b,h,p
3/4	3600	8"x1"x3/4"	**8125W**	2,087	GBX	99	575	Grinder	UL	a,i,p

Exercise caution – wear safety glasses and a mask

1022W

1022WD

All models have cast iron tool rests and exhaust type wheel guards.
Base mounted on/off switch.
Rubber feet to minimize vibration.

Hp	RPM	Wheel Size	Catalog Number	List Price	Disc. Sym.	Shpg. Wgt.	Voltage	Style	Agency Approval	Notes
1	1800	10"X1"X7/8"	**1022W**	2,748	GBX	133	115/230	Grinder	UL	a,J,p
1	1800	10"X1"X7/8"	**1022WD**	3,147	GBX	145	115/230	Grinder	UL	a,e,J
1-1/2	1800	10"X1"X7/8"	**1021W**	2,710	GBX	134	208-230/460	Grinder	UL, CSA	a,h,p
1-1/2	1800	10"X1"X7/8"	**1021WD**	3,103	GBX	146	208-230/460	Grinder	UL, CSA	a,e,h
1-1/2	1800	10"X1"X7/8"	**105W**	2,710	GBX	133	575	Grinder	UL, CSA	a,i,p

Exercise caution – wear safety glasses and a mask

Notes:
(a) Supplied with 36 & 60 grit wheels.
(b) Supplied with 36 grit and 0.014 wire wheel.
(e) Deluxe model includes water pot, tool tray and lighted eyeshields.
(g) Factory connected for 115 volts, power cord supplied.
(h) Factory connected for 208-230 volts, no power cord.
(i) 575 volt, 50//60 Hz.
(J) Factory connected for 115 volts, no power cord.
(p) Supplied with eye shield.

⚠ **WARNING:** Grinding Certain materials, such as lead based painted parts, can expose you to dust that may contain chemicals which are known to the state of California to cause cancer, birth defects or other reproductive harm. For more information go to www.P65Warnings.ca.gov.

Industrial Grinders

12 inch

Catalog #1215W
with #GA20 Pedestal
(sold separately)

Cast iron tool rests & exhaust type wheel guards.
Manual starter with overload protection.
Also includes lighted eyeshield (bulb not included).
All three-phase units are suitable for 50/60 Hz, 1500/1800 RPM operation.
Wheels sold separately. See chart below.

Hp	RPM	Wheel Size	Catalog Number	List Price	Disc. Sym.	Shpg. Wgt.	Voltage	Style	Agency Approval	Notes
2	1800	12"X2"X1-1/4"	**1215W**	6,180	GBX	253	208-230/460	Grinder	CSA	k
3	1800	12"X2"X1-1/4"	**1216W**	6,397	GBX	248	208-230/460	Grinder	CSA	k
2	1800	12"X2"X1-1/4"	**1217W**	6,543	GBX	253	115/230	Grinder	–	J
3	1800	12"X2"X1-1/4"	**129W**	6,397	GBX	256	575	Grinder	CSA	i

Exercise caution – wear safety glasses and a mask

14 inch

Catalog #1407W
with #GA20 Pedestal
(sold separately)

Cast iron tool rests & exhaust type wheel guards.
Magnetic starter with overload protection.
Also includes lighted eyeshields (bulbs not included).
Suitable for 50/60 Hz operation.
Wheels sold separately. See chart below.

Hp	RPM	Wheel Size	Catalog Number	List Price	Disc. Sym.	Shpg. Wgt.	Voltage	Style	Agency Approval	Notes
5	1800	14"X3"X1-1/4"	**1406W**	7,926	GBX	359	230	Grinder	CSA	m
5	1800	14"X3"X1-1/4"	**1410W**	7,926	GBX	362	460	Grinder	–	–
5	1800	14"X3"X1-1/4"	**1408W**	7,926	GBX	358	575	Grinder	CSA	–
7-1/2	1800	14"X3"X1-1/4"	**1407W**	8,646	GBX	372	230	Grinder	CSA	m
7-1/2	1800	14"X3"X1-1/4"	**1411W**	8,646	GBX	381	208-230/460	Grinder	–	m
7-1/2	1800	14"X3"X1-1/4"	**1409W**	8,646	GBX	374	575	Grinder	CSA	–

Exercise caution – wear safety glasses and a mask

Wheels for 12-Inch and 14-Inch Grinders

High quality aluminum oxide and silicon abrasive in a premium vitrified system

Catalog Number	List Price	Disc. Sym.	Diameter	Face	Bore	Grit	Shpg. Wgt.
B125	289	SVC	12"	2"	1-1/4"	30	22
B126	291	SVC	12"	2"	1-1/4"	46	22
B147	545	SVC	14"	3"	1-1/4"	30	42
B148	545	SVC	14"	3"	1-1/4"	46	41

Exercise caution – wear safety glasses and a mask

Note: When installing new wheels, check wheels for possible damage. Do not use a damaged wheel. With new wheel installed, all safety guards in place and operator standing away from front of grinder, run grinder for one minute before applying work.

Notes:
(i) 575 volt, 50//60 Hz.
(J) Factory connected for 115 volts, no power cord.
(k) Factory connected for 230, manual starter, specify voltage when ordering.
(m) Factory connected for 230, magnetic starter must be changed for other voltages.

WARNING: Grinding Certain materials, such as lead based painted parts, can expose you to dust that may contain chemicals which are known to the state of California to cause cancer, birth defects or other reproductive harm. For more information go to www.P65Warnings.ca.gov.

Industrial Tool Grinders

Diamond Wheel Grinder

Catalog #522

Diamond Wheel Tool Grinders feature all cast iron construction. Precision built, they have locked double row bearings and a maximum runout of .002 for precise tool and die work. Accommodates cup wheels with 1-1/4" center hole. Large tool tables with protractor type tool support.
Light and water pot with spout and faucet that can be moved to either side are standard equipment.
Diamond wheels sold separately. See chart below.

Hp	RPM	Wheel Size	Catalog Number	List Price	Disc. Sym.	Shpg. Wgt.	Voltage	Style	Agency Approval	Notes
1/2	3600	6"x1"x1-1/4	**522**	3,294	GBX	108	115	Tool Grinder	UL	g
1/2	3600	6"x1"x1-1/4	**532**	3,294	GBX	109	208-230/460	Tool Grinder	UL	h

Exercise caution – wear safety glasses and a mask
Note: Rough service bulb is suggested.

Carbide Tool Grinder

Catalog #500

Carbide Tool Grinders feature all cast iron construction.
Accommodates cup wheels with 1-1/4" center hole. Large tool tables with protractor type tool support. Light and water pot with spout and faucet that can be moved to either side are standard equipment.
Wheels sold separately. See chart below.

Hp	RPM	Wheel Size	Catalog Number	List Price	Disc. Sym.	Shpg. Wgt.	Voltage	Style	Agency Approval	Notes
1/2	3600	6"x1"x1-1/4	**500**	2,928	GBX	109	115	Tool Grinder	UL	g
1/2	3600	6"x1"x1-1/4	**510**	2,928	GBX	109	208-230/460	Tool Grinder	UL	h

Exercise caution – wear safety glasses and a mask
Note: Rough service bulb is suggested.

Wheels and Accessories

Catalog #D501

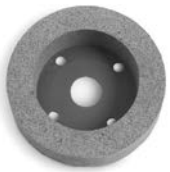

Catalog #C61

GA8

GA7

Catalog Number	List Price	Disc. Sym.	Shpg. Wgt.	Face	Grit	Description
D501	1,207	SVC	5	3/4"	120	General Purpose Diamond Wheel
D502	1,207	SVC	2	3/4"	220	Fine Finish Diamond Wheel
C61	263	SVC	5	1"	60	Silicone Carbide
C121	263	SVC	3	1"	120	Silicone Carbide
S46	173	SVC	3	1"	46	Aluminum Oxide
S61	173	SVC	3	1"	60	Aluminum Oxide
GA8	699	SVC	1	–	–	Wheel Dresser with Diamond NIB
GA7	173	SVC	1	–	–	Diamond NIB for GA8 (7/16 diameter x 1" long)

Exercise caution – wear safety glasses and a mask
Note: When installing new wheels, check wheels for possible damage.
Do not use a damaged wheel.
With new wheel installed, all safety guards in place and operator standing away from front of grinder, run grinder for one minute before applying work.

Notes:
(g) Factory connected for 115 volts, power cord supplied.
(h) Factory connected for 208-230 volts, no power cord.

⚠ **WARNING:** Grinding Certain materials, such as lead based painted parts, can expose you to dust that may contain chemicals which are known to the state of California to cause cancer, birth defects or other reproductive harm. For more information go to www.P65Warnings.ca.gov.

Industrial Belt Sanders

There are several options when it comes to industrial belt sanders – fixed and tiltable belts, grinder/sanders and even an adjustable speed sander for increased flexibility.
All units come with a base mounted on/off switch. All belt sanders are equipped with 2x48” 80 grit belt.

Catalog #602E-MT

Catalog #248-151D

Catalog #248-181TD

Catalog #248-151TD

Catalog #248-151AS

Hp	RPM	Tiltable Belt	Catalog Number	List Price	Disc. Sym.	Shpg. Wgt.	Voltage	Style	Agency Approval	Notes
1-1/2	3600	Fixed	**2048-151D**	3,539	GBX	88	115/230	Belt Sander	UL	g
1-1/2	3600	Fixed	**2048-153D**	3,373	GBX	76	208-230/460	Belt Sander	UL	h
1-1/2	3600	Three positions	**248-151TD**	3,916	GBX	95	115/230	Belt Sander	UL	g
1-1/2	3600	Three positions	**248-153TD**	3,696	GBX	84	208-230/460	Belt Sander	UL	h
1-1/2	3600	Three positions	**248-181TD**	4,516	GBX	138	115/230	Grinder/Belt Sander	–	J,l,r
1-1/2	3600	Three positions	**248-183TD**	4,431	GBX	128	208-230/460	Grinder/Belt Sander	UL	h,l,r
1-1/2	0-3600	Three positions	**248-151AS**	4,968	GBX	105	115	Adjustable Speed	–	g,l

Exercise caution – wear safety glasses and a mask

Industrial Buffers

Catalog #333B

Catalog #1458
with #GA20 Pedestal
(sold separately)

Buffers are designed for use with soft cloth wheels **only**. Specific buffing applications may require the addition of operator safety devices. Consult with a safety engineer before installation. Price includes flanges and nuts but does not include wheels.

Hp	RPM	Max. Wheel Size	Shaft Diameter	Catalog Number	List Price	Disc. Sym.	Shpg. Wgt.	Voltage	Agency Approval	Notes
3/4	1800	8″	3/4″	**332B**	1,538	GBX	55	115/230	UR	g,s
3/4	3600	8″	3/4″	**333B**	1,538	GBX	56	115/230	UR	g,s
3/4	1800	8″	3/4″	**334B**	1,503	GBX	54	208-230/460	UR, CSA	h,s
3/4	3600	8″	3/4″	**330B**	1,503	GBX	56	208-230/460	UR, CSA	h,s
1	1800	10″	7/8″	**407B**	2,041	GBX	60	115/230	UR	j,s
1-1/2	3600	10″	7/8″	**410B**	2,008	GBX	61	115/230	UR	j,s
1-1/2	1800	10″	7/8″	**409B**	1,960	GBX	59	208-230/460	UR, CSA	h,s
1-1/2	3600	10″	7/8″	**412B**	1,960	GBX	62	208-230/460	UR, CSA	h,s
2	1800	12″	1-1/4″	**1250**	4,726	GBX	164	115/230	UR	k
2	3600	12″	1-1/4″	**1251**	4,592	GBX	160	115/230	UR	k
3	1800	12″	1-1/4″	**1252**	4,340	GBX	156	208-230/460	UR, CSA	k
3	3600	12″	1-1/4″	**1253**	4,216	GBX	156	208-230/460	UR, CSA	k
5	1200	14″	1-1/4″	**1457**	6,337	GBX	228	230	UR, CSA	m
5	1800	14″	1-1/4″	**1458**	5,395	GBX	218	230	UR, CSA	m
7-1/2	1800	14″	1-1/4″	**1454**	6,024	GBX	229	230	UR, CSA	m
7-1/2	3600	14″	1-1/4″	**1453**	5,702	GBX	223	230	UR, CSA	m

Exercise caution – wear safety glasses and a mask

Notes:
(g) Factory connected for 115 volts, power cord supplied.
(h) Factory connected for 208-230 volts, no power cord.
(J) Factory connected for 115 volts, no power cord.
(k) Factory connected for 230, manual starter, specify voltage when ordering.
(l) Supplied with 8"x1"x3/4" 36 grit wheel and 80 grit belt.
(m) Factory connected for 230, magnetic starter must be changed for other voltages.
(n) Supplied with 0.014 wire wheel and 36" x 2" 100 grit belt.
(r) Grinder side eye shield included.
(s) Base mounted on-off switch.

WARNING: Grinding Certain materials, such as lead based painted parts, can expose you to dust that may contain chemicals which are known to the state of California to cause cancer, birth defects or other reproductive harm. For more information go to www.P65Warnings.ca.gov.

Big Red Grinders

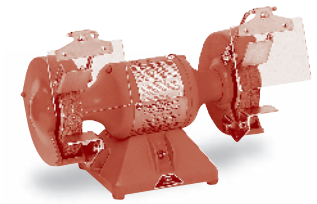

712RE

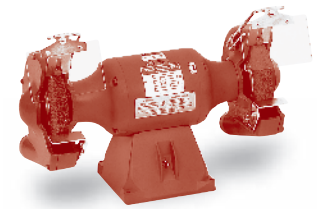

812RE

Big red grinders are available with 6", 7" or 8" wheels, equipped with base mounted on/off switch and 8 foot cord with plug. Rubber mounting feet help minimize vibration. Models ending in "E" have exhaust type wheel guards.

Hp	RPM	Wheel Size	Catalog Number	List Price	Disc. Sym.	Shpg. Wgt.	Voltage	Style	Agency Approval	Notes
1/2	3600	7"x1"x5/8"	**712R**	1,124	GBX	45	115	Grinder	UL, CSA	a,c,f,p
1/2	3600	7"x1"x5/8"	**762R**	1,124	GBX	43	115	Grinder/Buffer	UL, CSA	b,c,f,p
1/2	3600	7"x1"x5/8"	**712RE**	1,346	GBX	68	115	Grinder	UL, CSA	a,c,p
1/2	3600	7"x1"x5/8"	**762RE**	1,346	GBX	66	115	Grinder/Buffer	UL, CSA	b,c,p
3/4	3600	8"x1"3/4"	**812RE**	2,038	GBX	96	115/230	Grinder	UL	a,c,g,p
3/4	3600	8"x1"3/4"	**862RE**	2,038	GBX	95	115/230	Grinder/Buffer	UL	a,c,g,p

Exercise caution – wear safety glasses and a mask

Big Red accessories

Pedestals

GA16R GA14R

Catalog Number	Description	List Price	Disc. Sym.	Shpg. Wgt.
GA16R	Cast iron pedestal can be used on all Big Red Grinders Height is 32-7/8"	651	SVC	62
GA16RE	Light industrial version, all steel construction for use on 6" and 7" only, height is 34"	387	SVC	36
GA20RE	Light industrial version, all steel construction for use on 8" only, height is 34"	448	SVC	54
GA14R	Fabricated steel pedestal with storage shelves can be used on all Big Red Grinders, height is 34-1/2"	448	SVC	64
GA9R	2) Lighted eyeshield, 5-1/2" x 3-3/4" viewing area, 8-ft cord with plug, mounts to any Big Red Grinder	250	SVC	5
GA9SR	2) Lighted eyeshield with on/off switch, 5-1/2" x 3-3/4" viewing area, 8-ft cord with plug, mounts to any Big Red Grinder	278	SVC	5

Lighted Eyeshields

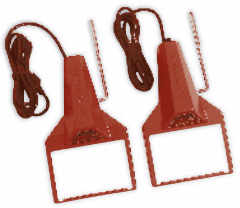

GA9R GA9SR

Notes:
(a) Supplied with 36 & 60 grit wheels.
(b) Supplied with 36 grit and 0.014 wire wheel.
(c) Stamp steel tool rests.
(d) Cast iron tool rests.
(f) Non-exhaust type wheel guards.
(g) Factory connected for 115 volts, power cord supplied.
(p) Supplied with eye shield.

⚠ **WARNING:** Grinding Certain materials, such as lead based painted parts, can expose you to dust that may contain chemicals which are known to the state of California to cause cancer, birth defects or other reproductive harm. For more information go to www.P65Warnings.ca.gov.

Accessories

Dust Control Units for Baldor-Reliance® Grinders, 115V, single phase, 60 Hz

Catalog #1022W
with DC10 and GA16
(sold separately)

Catalog Number	Dust Control Unit Price	Disc. Sym.	Grinding Wheel Maximum Dia.	Grinding Wheel Maximum Width	Cubic Ft/Min Total Cap.	Cubic Ft/Min Required Per Wheel By OSHA (o)	Air Control Valves	Shpg. Wgt.
DC7	3,210	SVC	7″	1″	440	220	Yes	60
DC8	3,210	SVC	8″	1″	440	220	Yes	62
DC10	3,210	SVC	10″	1″	440	390	Yes (p)	60
DC12	3,638	SVC	12″	2″	440	390	Yes (p)	62
DC12-3	3,638	SVC	12″	2″	440	390	Yes (p)	57
DC14-3 (n)	3,654	SVC	14″	3″	700	590	Yes (p)	73

Exercise caution – wear safety glasses and a mask

(n) DC14-3 powered with 1Hp TEFC 208-230/460 volt, three phase motor, less cord, switch, and lug.
(o) From ventilation section 1910.94 table G-4 Federal register vol. 37 #202, 10-18-72.
(p) Air control valve required to direct total CFM of collector to only the wheel being used to meet OSHA CFM requirements on 10″ and larger grinders.

Replacement Filter Bags

Catalog Number	List Price	Disc. Sym.	Dust Control Unit	Shpg. Wgt.
ARB-1	184	SVC	DC7, 8, 10, 12, 12-3	1
ARB-2	280	SVC	DC14-3	2

Note: Do not collect potentially reactive materials without consulting (NFPA) National Fire Protection Association Standards.
Powered by a 1/2 Hp TEFC single phase Baldor-Reliance® motor with cord, switch, and plug.
230 volt single phase units are available and supplied less switch, cord, and plug. Specify for 230 volt single phase operation.
Collectors with three phase motor less cord, switch, and plug are available.
For 208-230/460 volt three phase, add suffix -3 to catalog number. Add $30.00 to list price.
Mount dust control units with Grinder and GA16 or GA20 pedestal.

Dust Collector Bags

Catalog Number	List Price	Disc. Sym.	Description	Shpg. Wgt.
DA1	97	SVC	Dust Collector Bag (1 per carton). For D60 and D61 Dust Collectors	1

WARNING: Grinding Certain materials, such as lead based painted parts, can expose you to dust that may contain chemicals which are known to the state of California to cause cancer, birth defects or other reproductive harm. For more information go to www.P65Warnings.ca.gov.

Accessories

Grinder and Buffer Accessories

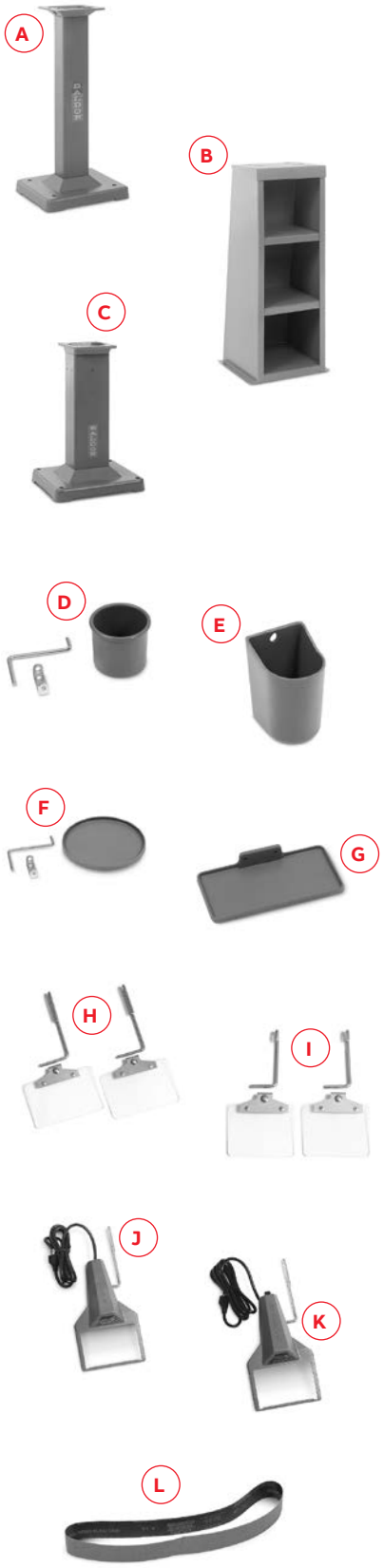

Item Number	Catalog Number	Description	List Price	Disc. Sym.	Shpg. Wgt.
A	**GA16**	Pedestal "Cast Iron"	594	SVC	62
	GA16E	Pedestal "Steel"	387	SVC	36
B	**GA14**	Pedestal "Steel"	480	SVC	64
C	**GA20**	Pedestal "Cast Iron"	975	SVC	119
	GA20E	Pedestal "Steel"	448	SVC	54
D	**GA24**	Water Pot	72	SVC	1
E	**GA3**	Water Pot	594	SVC	7
F	**GA25**	Tool Tray	71	SVC	9
G	**GA4**	Tool Tray	227	SVC	6
H	**GA11**	Eyeshield (pair)	120	SVC	2
I	**GA10**	Eyeshield (pair)	114	SVC	1
J	**GA9**	Lighted Eyeshield (less on/off switch) (pair)	250	SVC	5
J-1	**GA9-1**	Same as GA9 except packed 1 unit per carton	138	SVC	3
K	**GA9S**	Lighted Eyeshield (with on/off switch) (pair)	278	SVC	6
L	**AB248**	Abrasive Belt 2" x 48" – 80 Grit	38	SVC	1

(A) GA16 Pedestal for 6", 7", 8" and 10" grinders, carbide and diamond wheel grinders, 1/4 Hp through 1-1/2 Hp buffers and belt grinders. Height 32-7/8".
GA16E for 6" and 7" grinders "all steel construction". Height 34".

(B) GA14 Pedestal – fabricated steel, for 7", 8" and 10" grinders, 1/4 Hp through 1-1/2 Hp buffers. Height 34-1/2".

(C) GA20 Pedestal for 8", 10", 12" and 14" grinders and 3/4 through 7-1/2 Hp buffers. Height 30".
GA20RE for 8" & 10" grinders "all steel construction". Height 34".

(D) GA24 Water Pot for 623E, 673E, 612E, 662E, and 7" (except #712, #712R, #762, & #762R), 8" and 10" grinders.
Supplied with mounting bracket and swivel arm. Capacity 1-1/2 pints.

(E) GA3 Water Pot for GA20 pedestal. Capacity 3 pints.

(F) GA25 Tool Tray for 623E, 632E, 673E, 612E, 662E, 7" (except #712, #712R, #762, & #762R), 8" and 10" grinders.
Supplied with mounting bracket and swivel arm.
Diameter 8". Area 48 square inches.

(G) GA4 Tool Tray for GA20 pedestal. Dimensions 12" x 6".

(H) GA11 Eyeshield – 6" x 4" shatter resistant Plexiglas®.
Fits grinders 7" through 14".

(I) GA10 Eyeshield – 5" x 4" shatter resistant Plexiglas®.
Fits 6" Grinders and #712, #712R, #762 and #762R.

(J) GA9 Lighted Eyeshield – 5-1/2" x 3 3/4" viewing area made of shatter resistant Plexiglas®.
Supplied with 8 foot, 3 conductor cord with plug.
Accommodates standard 115 volt 60 watt bulb.
Supplied less bulb and on/off switch.
Mounts to grinders (except tool and belt grinders). Adjusts horizontally and vertically.
U.L. listed/CSA certified.

(J-1) GA9-1 – Same as GA9 except packed 1 per carton. 115 volt only.

(K) GA9S Lighted Eyeshield with On/Off Switch – 115 volt only.

(L) AB248 Abrasive Belt – 2" x 48" – 80 Grit.

Accessories

Wheels for Grinders

6" 7" 8" 10" 12" 14"

Features: Extremely durable aluminum oxide abrasive grain.
Excellent for steels and alloy steels.
Ideal for numerous general purpose applications.

Catalog Number	List Price	Disc. Sym.	Diameter	Face	Bore	Grit	Shpg. Wgt.
B73	72	SVC	7″	1″	5/8″	36	4
B74	72	SVC	7″	1″	5/8″	60	3
B80	86	SVC	8″	1″	3/4″	36	5
B81	86	SVC	8″	1″	3/4″	60	4
B102	127	SVC	10″	1″	7/8″	36	8
B103	127	SVC	10″	1″	7/8″	60	6
B125	289	SVC	12″	2″	1-1/4″	30	22
B126	291	SVC	12″	2″	1-1/4″	46	22
B147	545	SVC	14″	3″	1-1/4″	30	42
B148	545	SVC	14″	3″	1 1/4″	46	41

Exercise caution – wear safety glasses and a mask

Sewed Cotton Buffing Wheels

6" 8" 10"

Features: Wheels are muslin cloth, spiral sewn.
These bore sizes will fit shafts 1/8” greater diameter than bore.

Catalog Number	List Price	Disc. Sym.	Diameter	Face	Bore	Shpg. Wgt.
A65	37	SVC	6″	1/4″	1/2″	1
A82	46	SVC	8″	1/4″	3/4″	1
A103	69	SVC	10″	1/4″	7/8″	1

Exercise caution – wear safety glasses and a mask

Note: Cotton wheels are supplied in sections 1/4″ wide.
Two (or more) sections may be put together to make up wheel of desired width.

Wire Brush Wheels

6" 7" 8"

Features: Wheels are crimped, carbon steel wire.

Catalog Number	List Price	Disc. Sym.	Diameter	Face	Bore	Diameter of Wire	Shpg. Wgt.
W70	75	SVC	7″	5/8″	5/8″	0.014	1
W82	85	SVC	8″	3/4″	3/4″	0.014	1

Exercise caution – wear safety glasses and a mask

Note: 6″, 7″ & 8″ grinders equipped with grinding wheels can be converted to have wire brush wheels. To properly fit the wire brush wheels, flat washers or spacer must be placed on both sides of the wheel flanges. This will accommodate the width differences between the wire brush wheel and the original grinding wheel.
Order washers/spacers as follows:
6" (3) HW1000A50, 7″ (2) HA2047A01, 8″ (4) HW1000A75

Note: When installing new wheels, check wheel for possible damage. Do not use a damaged wheel.
With new wheel installed and all safety guards in place, and operator standing away from front of grinder, run grinder for one minute before applying work.
Exercise Caution. Wear safety glasses and a mask.

⚠ **WARNING:** Grinding Certain materials, such as lead based painted parts, can expose you to dust that may contain chemicals which are known to the state of California to cause cancer, birth defects or other reproductive harm. For more information go to www.P65Warnings.ca.gov.

Polishing Lathes and Chucks

340

353T

380WCT

LPL50

Polishing lathes have features preferred by dentists, dental lab technicians, jewelers, lapidary and other for precision, trouble-free polishing.

All lathes are supplied with 8-foot cord with plug, rubber feet and heavy construction to minimize vibration, provisions for mounting to a laboratory bench are provided as well.

Hp	RPM	Shaft Diameter/Taper	Catalog Number	List Price	Disc. Sym.	Shpg. Wgt.	Voltage	Style	Notes
1/4	3600/1800	0.375 / 0.250	**340**	916	GBX	31	115	Dual Speed	q
1/4	3000/1500	0.375 / 0.250	**342**	916	GBX	31	220-240	Dual Speed	r
1/4	3600/1800	0.375 / 0.250	**353T**	1,004	GBX	35	115	Dual Speed	q
1/2	3600	0.375 / 0.250	**359T**	1,006	GBX	36	115	Single speed	q
1/3	3600/1800	0.375 / 0.250	**380T**	1,117	GBX	42	115	Dual Speed	q
1/3	3600/1800	0.375 / 0.250	**380WCT**	2,570	GBX	47	115	Dual Speed	q,s
1/2	3600	0.625 / straight	**LPL50**	977	GBX	43	115	Single speed	q,t
3/4	3600	0.625 / straight	**LPL75**	1,193	GBX	48	115/230	Single speed	q,t

Exercise caution – wear safety glasses and a mask

Notes:
(q) Factory connected for 115 volts, power cord supplied.
(r) Factory connected for 220-240 volts, power cord without plug.
(s) Right side equipped with Wells Dental "Super Quick" chuck, 2 mandrels, 2 stone, 1 arbor band, 1 soft wheel chuck.
(t) Single shaft, right side.

True-Running Chucks

R1 R2 L3 L4 R5A R6 L7

Made to close-tolerance specifications, keeps vibration to an absolute minimum.

All chucks guaranteed to match lathes with standard tapered shafts. Mounting hole 0.370" tapered 0.250 per foot.

Catalog Number	List Price	Disc. Sym.	Description	Shpg. Wgt.
R1	116	SVC	Hard Wheel, Right Hand, Brass	1
R2	57	SVC	Soft Wheel, Right Hand, Brass	1
L3	111	SVC	Hard Wheel, Left Hand, Brass	1
L4	129	SVC	Soft Wheel, Left Hand, Brass	1
R5A	191	SVC	Burr Chuck, Right Hand	1
R6	64	SVC	Arbor Band, Right Hand, Brass	1
L7	250	SVC	Burr Chuck, Left Hand, Stainless	1

Exercise caution – wear safety glasses and a mask

Note: R1 & L3 hard wheel chucks accommodate up to 1/4" wide wheel with 1/4" arbor hole. R6 arbor band chuck accommodates 1/2" wide x 3/4" diameter arbor band.

Three Year Warranty

Polishing lathes are warranted against burnouts, defective materials, and workmanship for three full years. Warranty covers all parts except those subject to normal wear. "Wells Quick Chuck" warranted one year by manufacturer.

⚠ **WARNING:** Grinding Certain materials, such as lead based painted parts, can expose you to dust that may contain chemicals which are known to the state of California to cause cancer, birth defects or other reproductive harm. For more information go to www.P65Warnings.ca.gov.

Motor Mod Express®

Modification Number	Motor Mod Express®	Page No.
Balance		327
M1A	Dynamic Balance of Rotors	
Bearings		327
M2A	Sealed	
M2B	Ball to Roller 1800 RPM or Below	
M2F	Add Isolated Bearings NEMA 56 through 449T (SKF Insocoat or equivalent)	
Brake Motors		329
M3D	Change Stearns Brake Voltage	
Conduit Box		329
M4A	Tap or Provide Additional Lead Hole	
M4B	Rotate Conduit Box Lead Opening	
M4F	Replace Die Cast Aluminum Conduit Box	
M4G	Add Conduit Box for Thermostat or Heater Leads	
Cord		331
M5A	Install Line Cord in Conduit Box or Terminal Panel	
M5B	Install 6 Foot, 3 Conductor, Type SO Cord with Plug	
Drains		332
M7A	Add Condensation Drain Holes	
M7C	Close Standard Condensation Drain Holes	
M7D	Add Breather Drains to Cast Iron Explosion-Proof Motor	
Dripcovers		332
M8A	Install Dripcover on TEFC or ODP	
Leads		333
M10A	Install Terminal Lugs	
M10B	Reconnect Motor from Nine Leads to Three	
M10C	Reconnect Motor to High or Low Voltage in Conduit Box	
M10D	Longer Leads, Additional Leads Added	
Lubrication		334
M11A	Install Low Temperature Lubricant in Bearings	
M11B	Add High Temperature Grease	
Seals		335
M12A	Install Oil Seals	
M12B	Install Inpro/Seal® Drive End Only	
M12C	Install V-Ring Seals to Motor	
Mountings		336
M13A	Add Rigid Base	
M13B	Install NEMA C-Face – Steel Band Motor Construction	
M13C-1	Install NEMA C-Face – Cast Iron Construction	
M13C-2	Install NEMA C-Face – IEEE 841 Motors	
M13D	Add D-Flange	
M13E	Remove Rigid Base from Foot Mounted Steel Band Motors	
M13F-2	Convert Mounting Configuration for Cast Iron Motor	
M13G	Install C-Face to Explosion-Proof Motors	
M13I	Labor Only to Mount Grinder or Buffer onto a Pedestal and Package for Shipment	
Mounting Drawings		340

Motor Mod Express®

Modification Number	Motor Mod Express®	Page No.
Export Packaging		341
M14A	Open Crate Packaging	
M14B	Totally Enclosed Crate Packaging	
M14C	Motor and Nameplate Photograph	
Nameplate		342
M15A	Provide Original Nameplate for Remote Mounting	
M15B	Replace Nameplate	
M15C	Laser Engrave Nameplate into Stainless Steel Motor	
M15E	Mail Nameplates to Customer	
Blowers		342
M16A	Add Constant Velocity Blower Unit	
M16B	Convert from a 3 Phase to a Single Phase Blower	
Paint		343
M17A	Paint Motor Baldor-Reliance® Stock Paint Color	
M17B	Paint Motor or Parts Customer Specified Color	
Lifting Lugs		343
M18A	Add Lifting Lugs Up to a 326T Frame Size	
Hardware		344
M20A	Exchange Plated Hardware with Stainless Steel	
Space Heaters		344
M21A	Add Space Heaters to TEFC or Open Motors	
Thermal Protectors		345
M23A	Thermostats	
Winding Thermocouples		345
M24A	Iron Constantan (3 per motor)	
Winding Thermistors		346
M25A	Thermistors	
Tropicalization		346
M26A	Protection of Windings and Mechanical Parts	
Weatherproofing		346
M27A	Treatment of Windings and Mechanical Parts	
Shaft Modifications		347
M29A	Drill and Tap One Hole in End of Shaft or Mill Flat on Shaft Extension	
M29B	Convert from TEFC to TEAO	
M29C	Threading	
M29D	Convert “T” Frame to “U” Frame Shaft Dimension or Smaller (TS)	
M29F	Shorten Shafts Without Reducing the Overall Diameter	
Tach and Encoder Mounting Kits		349
M31D	Add Encoder Kit to Inverter Duty V*S Master or RPMAC Motor	
M31E	Additional Mounted Encoder Options for IDRPM Motors	
Testing		350
M32A	CSA C390 Method 1 Equivalent to IEEE 112 Method B Performance Testing	
M33A	Short Motor Test	
M33B	Routine Motor Test	
M33C	Complete Performance Test	
M33D	Calibration Test	
M33E	Sound Measurement Test	

Motor Mod Express®

Modification Number	Motor Mod Express®	Page No.
Terminal Blocks		352
M35A	Install IEC Terminal Blocks in Conduit Box and Connect Leads	
Starters		353
	Add Magnetic or Manual Starter to Grinder or Buffer	
M36A	Starter – Single Phase	
M36B	Starter – Three Phase	
M36C	Magnetic Starter – Three Phase	
M36D	Overload Protection for Dust Control Unit	
Shaft Grounding		355
M39A	Shaft Grounding Systems	
M39B-1	AEGIS® Bearing Protection Ring	
M39C	Baldor-Reliance® Shaft Grouding Brush Assembly	
M39D	Add AEGIS® Colloidal Silver Shaft Coating to Shaft	
Check Total Indicated Runout (TIR)		357
M40A	Check Total Indicated Runout (TIR)	
ABB Ability™		357
M43A	Install ABB Ability™ Smart Sensor for Motors	

Motor Mod Express®

Ordering Information

Note: Motors made for sale in the U.S. must comply with the Small Motor Rule and the Integral Horsepower Rule (10 CFR 431) including those modified from stock. After any modification, the motor must comply with the minimum efficiency levels if the motor is sold for use in the United States.

Motors sold for use in Canada must comply with the applicable regulations such as Natural Resources Canada if used in that country. Motors sold through distribution into Mexico must be registered and comply with NOM ANCE standards. Motors modified and sold for use in Europe must comply with CE for efficiency and other markings. Other countries have their own specific requirements and certifications for those specific countries.

Order size limited to qty. (1-10) and will ship as a single lot upon completion of modification. To order, specify the catalog number of the stock product and the MOD number. Apply the motor discount to the motor list price. Apply the modification discount symbol MX to the modification list price. Customer will absorb all freight costs when motor is shipped to Fort Smith from field warehouses. For order qty. (1-5) lead times will be as indicated and are subject to availability of stock motors in the Fort Smith Warehouse. Orders with qty. (6-10) may require additional scheduling lead time, contact your ABB sales office.

ModEx is intended for stock motors only. Motor orders for stock above the qty: 10 will need to run through product management for aproval prior to entry. No blanket orders and no more then 4 different mods per motor will be accepted. If you have more than 4 mods per motor you need to enter a custom.

Lead times indicated are subject to availability of stock motors in the Fort Smith Warehouse.

Customer will absorb all freight costs when motor is shipped to Fort Smith from field warehouses.

Note: Some modifications do not apply to explosion-proof motors. Contact your local sales office for approval.

MOD Express Cancellation Policy

Should it be necessary to cancel an order for a motor after it is modified, but before it ships – a cancellation charge of double the modification charge will be invoiced to the customer. Any MOD order cancelled before modification is completed is subject to 25% cancellation charge.

Once shipped, modified motors returned at purchaser's expense will be invoiced at double the MOD fee plus 10% restock fee.

Some modifications cannot be performed on UL, CSA, or UL/CSA Certified Grinders, Buffers, or Belt Sanders without voiding the Certification.

In such instances, the Certification Mark(s) would need to be removed.

Please contact your sales representative.

Motor Mod Express®

Modification Number	Motor Mod Express® Description and List Price	Working Days Required

Balance

M1A Dynamic Balance of Rotor

TWO DAYS

Re-balance stock motor to special balance NEMA 42 through 440 frame.

Squirrel Cage Type

NEMA Frame	Standard Balance	Special Balance	List Price Per Motor
40 - 140	0.15”/s	0.08”/s	512
180 - 210	0.15”/s	0.08”/s	1,242
250 - 280	0.15”/s	0.08”/s	1,788
320 - 360	0.15”/s	0.08”/s	3,468
400	0.15”/s	0.10”/s	4,200
440	0.15”/s	0.10”/s	4,384

Note: Balance units are for velocity in inches per second.
Special balance is the standard level for IEEE-841 (2009).

Bearings

M2A Sealed

TWO DAYS

This modification provides the option of replacing standard bearings in AC motors with sealed bearings.

NEMA Frame	List Price Per Motor (2 Bearings)
48, 56	362
143 - 145	370
182 - 184	466
213 - 215	466
254 - 256	870
284 - 286	870
324 - 326	1,124
364 - 365	1,124

Note: Grease fittings will be replaced with slotted head pipe plugs.
Contact your sales representative.

Grease fittings will be replaced with slotted head pipe plugs unless otherwise specified.

Motor Mod Express®

Modification Number	Motor Mod Express® Description and List Price	Working Days Required

Bearings continued...

M2B — Ball to Roller 1800 RPM or Below

THREE DAYS

Roller bearings have the capability to handle higher radial loads than ball bearings, but must have high minimum radial loads to operate correctly.

Roller bearings must only be used in heavy belted loads, they are not suitable for coupled loads. Only the stock 449T frames 2300V and above, TEFC motors with "L" shafts have high strength steel shafts.

Also see the main catalog section for stocked Baldor-Reliance® motors with roller bearings already installed. These stock motors are identified with a "LR" suffix after the catalog number.

Does Not Apply to Explosion-Proof Motors or designs that must be built as custom motors.

NEMA Frame	List Price Per Motor
449T*	3,896

Note: *449T - Applicable to 449T, 2300 volt and above.
Users must ensure to not exceed load carrying capability of installed roller bearing.
Maxium load capability of a rating can be provided.
If unsure of your load data, a belt load datasheet can be provided to assist.

M2F — Add Isolated Bearings NEMA 56 through 449T (SKF Insocoat or equivalent)

TWO DAYS

If insulating both bearings, the addition of M39A is recommended.

NEMA Frame	List Price (x2 per set)
56 - 145T	1,078
182T - 184T	1,120
213T - 215T	1,524
254T - 256T	2,336
284T - 286T	2,932
324T - 326T	3,268
364T - 365T	3,386
404T - 405T	3,544
444T - 445T	3,704
447T - 449T	6,348

Note: Totally Enclosed (TEFC) 449T frames at 2300/4000V motors come standard with an insulated opposite drive bearing.

Motor Mod Express®

Modification Number	Motor Mod Express® Description and List Price	Working Days Required

Brake Motors

M3D — Change Stearns Brake Voltage

CONTACT YOUR LOCAL SALES OFFICE

Brake coils will be changed to allow operation from different voltage supplies for both 50 and 60 hertz AC or from DC supplies.

External brake coil lead connections will be brought from the brake or from the motor conduit box when necessary in the application.

Specify brake lead location, voltage of brake coil, frequency of supply source. (Allow 2 weeks for brake coil delivery.)

List price: $564 per brake (plus any difference in coil cost).

Conduit Box

M4A — Tap or Provide Additional Lead Hole

TWO DAYS

Lead outlet hole in conduit box with dimensions as shown below will be tapped to accept threaded conduit as shown in "Optional threaded hole..." column below.

An additional clearance hole or threaded hole may be supplied if specified. Use same list adder for threaded hole.

NEMA Frame	Stock Motor Hole Diameter *	Stock Motor For Conduit Size	Optional Threaded Hole For Conduit Size	List Price Per Motor
48 - 145T	7/8"	1/2"	3/4"	252
182 - 215T	1-1/16"	3/4"	1"	252
254 - 256T	1-3/8"	1"	1-1/4"	412
284 - 326T	2"	1-1/2"	2"	412
364 - 365T	2-1/2"	2"	2-1/2"	552
404 - 405T	3"	2 1/2"	3"	600
444 - 447T	3"	2-1/2"	3"	600

Note: * Stock motor lead holes are not threaded except on Dirty Duty and Chemical Process motors.
Extra lead holes do not apply to Explosion-Proof motors.
If additional hole is needed, specify hole diameter and exact location.
Contact your sales representative for application assistance.

Motor Mod Express®

Modification Number	Motor Mod Express® Description and List Price	Working Days Required

Conduit Box continued...

M4B

Rotate Conduit Box Lead Opening

Specify lead opening location facing conduit box

List Price Per Motor: $294

TWO DAYS

M4F

Replace Die Cast Aluminum Conduit Box

Install cast iron conduit box with drilled and tapped entrance hole.

NEMA Frame	List Price Per Motor
42 - 56	324
143 - 215T	374
254 - 286T	460
324 - 365T	736

TWO DAYS

M4G

Add Conduit Box for Thermostat or Heater Leads

Not for Explosion-Proof motors

NEMA Frame	List Price Per Motor
56 - 145T	882
182 - 215T	1030
254 - 365T	1556
404 - 449T	1968

CONTACT YOUR LOCAL SALES OFFICE

Motor Mod Express®

Modification Number	Motor Mod Express® Description and List Price	Working Days Required

Cord

M5A Install Line Cord in Conduit Box or Terminal Panel

TWO DAYS

Heavy duty, industrial type SO oil resistant cord with ground will be installed in conduit box or terminal panel. Strain relief included.

Plug not included.

Does Not Apply to Explosion-Proof Motors.

Some modifications cannot be performed on UL, CSA, or UL/CSA Certified Grinders, Buffers, or Belt Sanders without voiding the Certification. In such instances, the Certification Mark(s) would need to be removed.

Please contact your sales representative.

Wire Gauge	Amp Rating Single Phase	Amp Rating Three Phase	Six Feet or Less List Price	Each Additional Foot to Ten Max List Price
18	10	7	266	20
16	13	10	266	22
14	18	15	308	28
12	25	20	324	30

Note: Specify voltage and rotation facing drive end of motor.

M5B Install 6 Foot, 3 Conductor, Type SO Cord with Plug

TWO DAYS

With ground plug for 115VAC, single phase only.

Does Not Apply to Explosion-Proof Motors.

Some modifications cannot be performed on UL, CSA, or UL/CSA Certified Grinders, Buffers, or Belt Sanders without voiding the Certification. In such instances, the Certification Mark(s) would need to be removed. Please contact your sales representative.

Hp	List Price Per Motor
1 Hp and smaller	284

Note: Advise rotation facing drive end of motor

Motor Mod Express®

Modification Number	Motor Mod Express® Description and List Price	Working Days Required

Drains

M7A Add Condensation Drain Holes

TWO DAYS

A maximum of two additional drilled holes will be made in both endplates of 215T frame and smaller TEFC motors.

A maximum of one additional plastic T-drain fitting will be installed in both endplates of 254T frame and larger TEFC motors.

Does Not Apply to Explosion-Proof Motors

NEMA Frame	List Price Per Motor
215 and Smaller	446
254 - 449	606

Note: Indicate position of drain holes in each endplate.

M7C Close Standard Condensation Drain Holes

TWO DAYS

Close existing drain holes with plugs.

Does Not Apply to Explosion-Proof Motors

NEMA Frame	List Price Per Motor
215 and Smaller	370
254 - 449	446

M7D Add Breather Drains to Cast Iron Explosion-Proof Motor

TWO DAYS

Drain Type	List Price Per Motor
UL Listed Explosion-Proof Drain – ANSI 316 S.S.	778
UL Listed Explosion-Proof Drain – Crouse-Hinds ECD	874

Dripcovers

M8A Install Dripcover on TEFC or ODP

TWO DAYS

NEMA Frame	List Price Per Motor ODP or TEFC
48 - 145	294
182 - 184	316
213 - 215	352
254 - 256	404
284 - 286	488
324 - 326	540
364 - 365	976
404-405 (NEMA Frame)	976
444 - 449 (NEMA Frame)	1,384

Note: Lifting provisions for 250 and up may require additional lifting provision M18A

Motor Mod Express®

Modification Number	Motor Mod Express® Description and List Price	Working Days Required

Leads

M10A Install Terminal Lugs

TWO DAYS

Ring-type non insulated terminals made of copper alloy and seamless compression type lugs.

Prices are standard 3-lead single voltage three-phase motors.

Multiply mod list adder for actual number of leads per motor.

NEMA Frame	List Additions for 3 Terminal Lugs
215 and Smaller	360
254-365	446
404-445	530
447-449	530

M10B Reconnect Motor from Nine Leads to Three

TWO DAYS

Specify Voltage When Ordering

NEMA Frame	List Price Per Motor
42 - 145	324
182 - 184	502
213 - 215	666
254 - 256	750
284 - 286	988
324 - 326	1,248

Note: On explosion proof, leads are connected in conduit box.

M10C Reconnect Motor to High or Low Voltage in Conduit Box

TWO DAYS

Please specify voltage.

NEMA Frame	List Price Per Motor
42 - 145	324
182 - 184	502
213 - 215	666
254 - 256	750
284 - 286	988
324 - 326	1,248

M10D Longer Leads, Additional Leads Added

TWO DAYS

Does Not Apply to Explosion-Proof Motors.

Some modifications cannot be performed on UL, CSA, or UL/CSA Certified Grinders, Buffers, or Belt Sanders without voiding the Certification.

In such instances, the Certification Mark(s) would need to be removed.

Please contact your sales representative.

NEMA Frame	Number of Leads	18 Inches	24 Inches	List Price 36 Inches
42-286	3 - 12 Leads	430	436	448
324-449	3 Leads	648	670	692
	6 Leads	716	760	806
	9 Leads	784	850	918
	12 Leads	850	940	1,030

Note: If lead requirements are longer than 8 feet contact your sales representative.

Motor Mod Express®

Modification Number	Motor Mod Express® Description and List Price	Working Days Required

Lubrication

M11A Install Low Temperature Lubricant in Bearings

TWO DAYS

(Single Shield or Open Bearing)

Standard grease is Exxon POLYREX® EM, with bearing operating temperature range of -15° to +250°F.

For low temperature operation, please specify either Aeroshell #7 or Mobil Temp SHC-32 low temperature grease which allows an operating temperature range for bearings of -55° to +200°F.

New bearings are installed when grease is changed.

Does Not Apply to Explosion-Proof Motors

NEMA Frame	List Price Per Motor
48	252
56 - 145T	270
182 - 184T	290
213 - 215T	300
254 - 256T	384
284 - 286T	426
324 - 326T	598
364 - 365T	638
404 - 405T	1,014
444 - 449T	1,400

Note: Low temperature operation below -25C (-13F)

M11B Add High Temperature Grease

TWO DAYS

Standard grease is Exxon POLYREX® EM, with bearing operating temperature range of -15° to +250°F. For High temperature operation, please specify Mobilith SHC 220 high temperature grease which allows an operating temperature range for bearings of -40° to +302°F.

New bearings are installed when grease is changed.

Does Not Apply to Explosion-Proof Motors

NEMA Frame	List Price Per Motor
48	252
56 - 145T	270
182 - 184T	290
213 - 215T	300
254 - 256T	384
284 - 286T	426
324 - 326T	598
364 - 365T	638
404 - 405T	1,014
444 - 449T	1,400

Note: Contact your sales representative to discuss application prior to ordering.

Motor Mod Express®

Modification Number	Motor Mod Express® Description and List Price	Working Days Required

Seals

M12A Install Oil Seals

CONTACT YOUR LOCAL SALES OFFICE

Nitrile is the standard oil seal material

Does Not Apply to Explosion-Proof Motors

NEMA Frame	List Price Each
48, 56	684
143T - 145T	684
182T - 184T	756
213T - 215T	834
254T - 256T	1,148
284T - 286T	1,346
324T - 326T	1,520
364T - 365T	1,912
404T - 405T	1,912
444T - 449T*	2,016

*** For 449T frames 2300 Volt and above, consult M27B Mod.**

M12B Install Inpro/Seal® Drive End Only

FOUR DAYS

Inpro/Seal® VBX is the standard material used.

Note: Contact your sales representative for opposite drive end installation or order IEEE 841 motor from stock.

Does Not Apply to Explosion-Proof Motors

NEMA Frame	List Price Each
143T-215T	2,140
254-256T	2,680
284-286T	2,856
324-326T	3,032
364-365T	3,478
404-405T	3,650
444-449T	4,448

M12C Install V-Ring Seals to Motor

TWO DAYS

Add set of V-Ring seals to the motor. One seal in the DE, and another seal between the fan and ODE Endplate.

TENV and OPEN motors only get a seal on the DE.

List per motor: $532

Motor Mod Express®

Modification Number	Motor Mod Express® Description and List Price	Working Days Required

Mountings

M13A Add Rigid Base

TWO DAYS

Weld stamped steel base to steel band explosion proof motor unless motor meets VEM or VEL.

Not available if conversion results in motors that fall under EISA/NRCAN requirements.

NEMA Frame	List Price Per Motor
42 - 48	336
56	344
143 - 145T	344
182 - 184T	418
213 - 215T	502

Note: Not available for cast iron motors.

M13B Install NEMA C-Face – Steel Band Motor Construction

TWO DAYS

284T & LARGER SUBJECT TO CASTING AVAILABILITY

Add to rigid base mounted motor.

Not for explosion proof motors.

NEMA Frame	List Price Per Motor
42, 48 & 56	442
143 - 145T (1)	442
182 - 184T (1)	484
213 - 215T (1)	586
254 - 256T (2)	1,114
284 - 286T (2)	1,512
324 - 326T (2)	1,976

Note: (1) These motors will have a non-NEMA BA dimension when C-Face is added.

(2) Applies to ODP only.

Open motors having type numbers beginning with "34" cannot be modified to C-Face. Contact your local sales office for details.

Motor Mod Express®

Modification Number	Motor Mod Express® Description and List Price	Working Days Required

Mountings continued...

M13C-1 Install NEMA C-Face – Cast Iron Construction

TWO DAYS

Install Cast Iron Endplate where aluminum die cast parts are supplied as standard.

Does Not Apply to Explosion-Proof Motors, See M13G

NEMA Frame	List Price Per Motor
48 & 56	468
143 - 145T (1)	468
182 - 184T (1)	564
213 - 215T (1)	648
254 - 256T	1,434
284 - 286T	1,976
324 - 326T	2,138
364 - 365T	2,306
404 - 405T	2,876
444 - 449T	3,450

Note: (1) These motors will have a non-NEMA BA dimension when C-Face is added. Specify C-face or Standard horizontal endplate.

M13C-2 Install NEMA C-Face – IEEE 841 Motors

TWO DAYS

NEMA Frame	NEMA C-Face Price
284 - 365TC	2,044
324 - 326TC	3,180
364 - 326TC	3,222
404 - 405TC	3,586
447 - 449TC	3,804

Motor Mod Express®

Modification Number	Motor Mod Express® Description and List Price	Working Days Required

Mountings continued...

M13D Add D-Flange

CONTACT YOUR LOCAL SALES OFFICE

Some motors may be converted to D-Flange mounting and meet NEMA BA dimensions.

All other frame sizes needing D-Flange mounting please order as custom motor.

Does Not Apply to Explosion-Proof Motors

Steel Band

NEMA Frame	List Price Per Motor
140	442
180	1,196
320	1,972

Cast Iron

NEMA Frame	List Price Per Motor
180	642 * †
250	2,138 * †
280	2,384 *
320	2,714 *

Note: * TEFC motors only
† Must start with motor that already has C-Face on it.

M13E Remove Rigid Base from Foot Mounted Steel Band Motors

TWO DAYS

NEMA Frame	List Price Per Motor
42 - 48	448
56	460
143 - 145T	460
182 - 184T	558

Notes: Bases cannot be removed from motors above 180T frame.
Bases cannot be removed from explosion proof motors.

Motor Mod Express®

Modification Number	Motor Mod Express® Description and List Price	Working Days Required

Mountings continued...

M13F-2 Convert Mounting Configuration for Cast Iron Motor

THREE DAYS

Available on all Cast Iron AC motors through 449T Frame. For conversion to F2 designs, check available inventory before using Mod.

Consists of repositioning endplate vents, condensation drains, and where applicable, the conduit to positions shown in the Mountings chart at the end of Mountings mods.

Does Not Apply to Explosion-Proof Motors

NEMA Frame Enclosure	Specify Mounting configuration using Drawing at the end of ModEx Mountings section ODP	TEFC	List Price Per Motor
Up to 184T	Yes	Yes	426
213 - 215T	Yes	Yes	426
254 - 326T	Yes	Yes	426
365 - 449T	Yes	Yes	426

M13G Install C-Face to Explosion-Proof Motors

THREE DAYS

Only available on NEMA frames shown below.

NEMA Frame	List Price Per Motor
56	536
143 - 145T (Steel Band only)	536
284 - 286T	3,864
324 - 326T	5,286
364 - 365T	5,914
404 - 405T	6,978

Note: Any other frame size must be built as a custom motor.

M13I Labor Only to Mount Grinder or Buffer onto a Pedestal and Package for Shipment

TWO DAYS

Price does not include the grinder or buffer, pedestal or any accessories.

Wheel Size	List Price Per Grinder or Buffer
All	426

Motor Mod Express®

Modification Number	Motor Mod Express® Description and List Price	Working Days Required

Mountings continued...

Floor Mountings

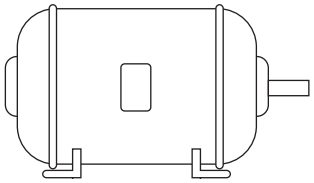
Assembly F-1

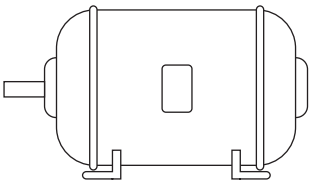
Assembly F-2

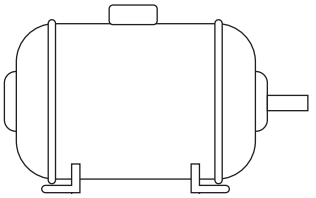
Assembly F-3

Wall Mountings

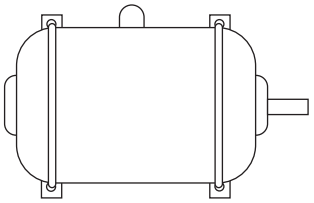
Assembly W-1

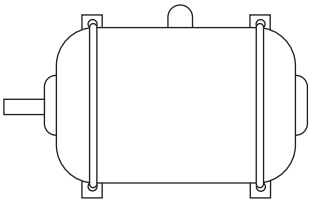
Assembly W-2

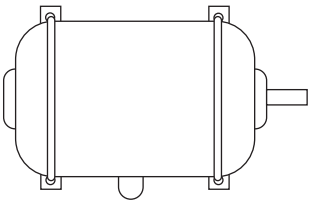
Assembly W-3

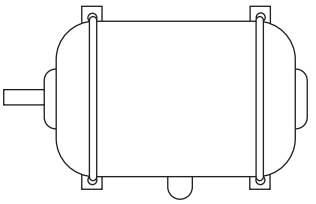
Assembly W-4

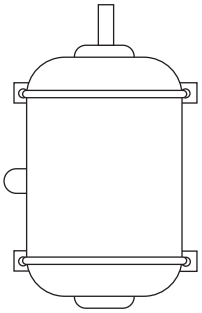
Assembly W-5

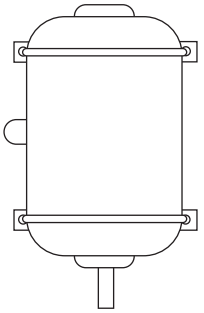
Assembly W-6

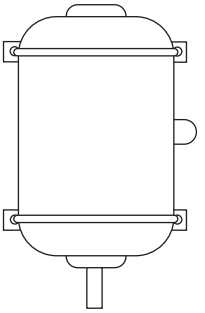
Assembly W-7

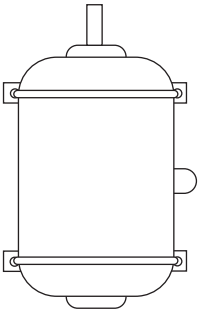
Assembly W-8

Ceiling Mountings

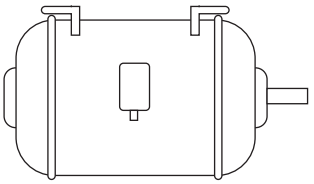
Assembly C-1

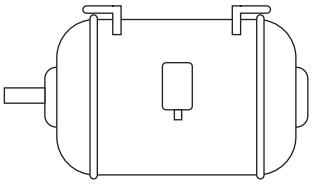
Assembly C-2

Note: For all NEMA mounting configurations, refer to NEMA MG 1-2016.

Motor Mod Express®

Modification Number	Motor Mod Express® Description and List Price	Working Days Required

Export Packaging

M14A Open Crate Packaging

EIGHT DAYS

Replace standard motor packaging with Open Crate.

For NEMA 360 thru 449 frames the open crate has Euro base as standard. Requests for Euro pallet on NEMA 320 frame and smaller must be made in shipping instructions.

NEMA Frame	Open Crate List Price
56-215	1,008
254-326	1,312
364-445	1,852
447-449	2,096

M14B Totally Enclosed Crate Packaging

EIGHT DAYS

Replace standard motor packaging with Enclosed Crate.

For NEMA 360 thru 449 frames the enclosed crate has Euro base as standard.

Requests for Euro pallet on NEMA 320 frame and smaller must be made in shipping instructions.

NEMA Frame	Open Crate List Price
56-215	1,262
254-326	1,776
364-445	2,210
447-449	2,568

M14C Motor and Nameplate Photograph

FIVE DAYS

Take photo of motor and nameplate for FAA Security Endorsement Documents.

Photos will be attached to sales order.

List price per motor: $170

Motor Mod Express®

Modification Number	Motor Mod Express® Description and List Price	Working Days Required

Nameplate

M15A **Provide Original Nameplate for Remote Mounting** — TWO DAYS

Extra nameplate is packed with motor, not mounted.
All CSA and UL_R markings are removed on duplicate nameplates.
Shipped loose.

List per motor: $190

M15B **Replace Nameplate** — TWO DAYS

Replace motor nameplate which may include customer part numbers, voltage, hertz, etc.

List per motor: $230

M15C **Laser Engrave Nameplate into Stainless Steel Motor** — TWO DAYS

Motor nameplate is laser etched on stainless steel band surface up to 210 frame motor

List per motor: $230

M15E **Mail Nameplates to Customer** — TWO DAYS

(All CSA and UL_R markings are removed on nameplates ordered as a mail out order)

No Explosion-Proof Nameplates (No Exceptions!)

Order minimum charge of $31 net. Add $3.00 net for each additional nameplate.

Note: No charge orders, only accepted if with RA or warranty claim.
Nameplates for Explosion-proof motors will not be mailed out, no exceptions.

Blowers

M16A **Add Constant Velocity Blower Unit** — TWO DAYS

Contact your sales representative for details

M16B **Convert from a 3 Phase to a Single Phase Blower** — TWO DAYS

NEMA Frame	List Price Per Motor
All	456

Motor Mod Express®

Modification Number	Motor Mod Express® Description and List Price	Working Days Required

Paint

M17A — Paint Motor Baldor-Reliance® Stock Paint Color

TWO DAYS

Baldor-Reliance® Stock colors are: Metallic Gray, Reliance Blue/Green, Gold Super-E, Black, White, Silver, Lite Tan. Please specify color on order.

All orders that call for Epoxy paint require an additional day to allow for complete drying of paint.

NEMA Frame	Open Crate List Price
42 - 215T	294
254 - 449T	1,158

M17B — Paint Motor or Parts Customer Specified Color

TWO DAYS

Painted parts include, but are not limited to, fan covers, conduit boxes, drip covers, etc.

Please provide color chip or RAL number on order.

All orders that call for Epoxy paint require an additional day to allow for complete drying of paint.

List price: Contact your local sales office for quote.

Lifting Lugs

M18A — Add Lifting Lugs Up to a 326T Frame Size

TWO DAYS

NEMA Frame	List Price Per Motor
48 - 145T	438
182 - 215T	544
254 - 286T	706
324 - 326T	862

Motor Mod Express®

Modification Number	Motor Mod Express® Description and List Price	Working Days Required

Hardware

M20A Exchange Plated Hardware with Stainless Steel

TWO DAYS

Replaces all mounting hardware for fan cover, conduit box, bearing retainers, thru-bolts, and frame bolts with 304 stainless steel hardware.

NEMA Frame	List Price Per Motor
56-184	674
213-215	746
254-256	862
284-286	976
324-326	1,122
364-405	1,294
444-445	1,584
447-449	1,752

Space Heaters

M21A Add Space Heaters to TEFC or Open Motors

TWO DAYS

Standard space heater voltage is 110VAC.
Heaters for 230 or 460 volts are available. Specify circuit voltage.

Does Not Apply to Explosion-Proof Motors

NEMA Frame	List Price Per Motor
145T and Smaller	638
182 - 215T	804
254 - 365T	1,196
404 - 449T	1,360

Note: Strip type space heaters are standard.

Motor Mod Express®

Modification Number	Motor Mod Express® Description and List Price	Working Days Required

Thermal Protectors

M23A Thermostats

TWO DAYS

One or More Thermostats Laced to Winding

For over temperature protection.

These are pilot circuit devices only with leads into conduit box tagged "JJ".

Specify normally open or closed contacts.

All ECP motors require hermetically sealed thermostats to maintain Division 2 marking.

Does Not Apply to Explosion-Proof Motors

NEMA Frame	Number of Devices	Standard List Price Per Motor	Hermetically Sealed for Division 2
Single Phase	1	370	N/A
Three Phase 42 - 215T	3 (3)	418	608
Three Phase 254 - 449T	3 (3)	1,114	1,306
Direct Current 48 - 215T	1	418	N/A

Note: (3) In Series with two leads into conduit box. Normally open are in parallel.

Winding Thermocouples

(3 per motor, 6 foot standard length)

M24A Iron Constantan (3 per motor)

TWO DAYS

Specify location.

Does Not Apply to Explosion-Proof Motors

NEMA Frame	List Price Per Thermocouple
42 - 215T	404
254 - 449T	834

Note: Thermocouples are installed on end turns.

Motor Mod Express®

Modification Number	Motor Mod Express® Description and List Price	Working Days Required

Winding Thermistors

M25A Thermistors

TWO DAYS

Thermistors are normally applied in sets of Three (3) per Motor, One (1) per Phase.

Does Not Apply to Explosion-Proof Motors

List Price per motor: $1,338

Tropicalization

M26A Protection of Windings and Mechanical Parts

TWO DAYS

Protection from tropical environments.

NEMA Frame	List Price Per Motor AC
Through 215T	488
254 - 365T	700
404 - 449T	1,196

Weatherproofing

M27A Treatment of Windings and Mechanical Parts

TWO DAYS

Protection from the elements or high moisture areas.

Does Not Apply to Explosion-Proof Motors

NEMA Frame	List Price Per Motor AC
42 - 215T	476
254 - 365T	2,224
404 - 449T	2,612

Note: "Dirty Duty", "CP" and "ECP" motors are weatherproofed as standard.

Motor Mod Express®

Modification Number	Motor Mod Express® Description and List Price	Working Days Required

Shaft Modifications

Includes modifications to existing shafts only.
Not applicable if new shaft is required. Price each modification per table.
One or both bearings will be replaced after shaft modification is complete.

FIVE DAYS

NEMA Frame	List Price Per Modification	NEMA Frame	List Price Per Modification
42 - 145T	438	254T - 256T	582
182 - 184T	460	284 - 286T	582
ASM62 (5)	540	324-326T	674
213 - 215T	638	364-365T	718
ASM75 (5)	638	404-405T	802

Note: (5) Arbor Saw Motors.

M29A Drill and Tap One Hole in End of Shaft or Mill Flat on Shaft Extension.

THREE DAYS

Provide details on order.
Price this modification per table above.

M29B Convert from TEFC to TEAO

THREE DAYS

Cut off shaft extension for external fan.
Price this modification per table above.

Does Not Apply to Explosion-Proof Motors

M29C Threading

FIVE DAYS

Specify right hand or left hand thread, also type and length of thread.

Price this modification per table above.

Motor Mod Express®

Modification Number	Motor Mod Express® Description and List Price	Working Days Required

Shaft Modifications continued...

M29D — Convert "T" Frame to "U" Frame Shaft Dimension or Smaller (TS)

FIVE DAYS

Shorten shaft and reduce overall diameter. Provide details on order. For "U" frame conversion on 280, 320, 360, and 440 frames, please enter custom order. Not available through Mod Express.

NEMA Shaft	Conversion of T Frame to TS or U Frame List Price Per Motor
143 thru 145T	438
182 thru 215T	804
254 thru 286T	1,832
324 thru 365T	2,728
404 thru 449T	4,496

M29F — Shorten Shafts Without Reducing the Overall Diameter

THREE DAYS

Shortening the shaft may cause the motor to fall out of NEMA standards. If motor falls out of NEMA standards, the nameplate will be designated with a "TZ" to signify short shaft.

NEMA Shaft	List Price Per Motor
48 - 145T	464
182 - 215T	494
254 - 256T	506
324 - 326T	534
364 - 365	562
404 - 405	562
447 - 449	588

Motor Mod Express®

Modification Number	Motor Mod Express® Description and List Price	Working Days Required

Tach and Encoder Mounting Kits

M31D — Add Encoder Kit to Inverter Duty V*S Master or RPMAC Motor

TWO DAYS

Order encoders separately.
Encoders can be found in the Variable Speed AC motors section.

NEMA Frame	RPMAC Frame	List Price Per Motor
56 - 215T	FL/RL180-210	382
254T - 404T	FL/RL 250-400	794
444T - 449T	FL/RL440	1,238

M31E — Additional Mounted Encoder Options for IDRPM Motors

TWO DAYS

List price includes encoder and mounting to motor.

Type	Frame Size	Mfg.	PPR	Mag or Optical	Conn Type	Input Voltage VDC	List Price
HS35	All	BEI	1024	O	MS-TL	5-28	3,668
HS35	All	BEI	2048	O	MS-TL	5-28	3,668
LP35	All	BEI	1024	M	Term. Block	5-15	3,668
LP35	All	BEI	1024	M	MS-TL	5-15	3,668
LP35	All	BEI	1024	M	MS-ST	5-15	3,668
HS20	All	Dynapar	1024	O	MS-TL	5-26	3,668
ST85	All	Northstar	1024	O	EPIC Latch	5-15	6,452
HS35M	All	Avtron	1024	M	MS-ST	5-24	3,990
HS35M	All	Avtron	1024	M	EPIC Latch	5-24	3,990

Motor Mod Express®

Modification Number	Motor Mod Express® Description and List Price	Working Days Required

Testing

Contact your local sales office for original factory test reports.

M32A CSA C390 Method 1 Equivalent to IEEE 112 Method B Performance Testing

SEVEN * DAYS

Three phase stock motors will be tested under lab conditions according to CSA C390 (equivalent to IEEE 112b).

Complete test data will be supplied.

Bearings are replaced after testing.

NEMA Frame	List Price Per Motor
42 - 215	4,800
254 - 320	7,802
360 - 449	9,388

Note: 449T frames 2300V motors will be tested at factory.

M33A Short Motor Test

SEVEN * DAYS

Three phase or single phase motors will have any or all of the following motor characteristics measured. Test data will be supplied.
All data will be taken on cold motor.

- No Load Current
- Full Load Current
- Breakdown Torque
- Locked Rotor (Starting) Current
- Locked Rotor Torque
- Hi-Potential Test

NEMA Frame	List Price Per Motor
42 - 215T	800
254 - 449T	1,462

Note: Not available for 449T Frame 2300 Volt and up.

M33B Routine Motor Test

SEVEN * DAYS

This is a test reported per IEEE Std. 112 – 2004 Annex B.

All data will be taken on a cold motor.
Test includes:

- No Load Current
- Locked Rotor Current
- High-Potential
- Winding Resistance

NEMA Frame	List Price Per Motor
42 - 215T	540
254 - 449T*	992

Note: * Lead time is dependent on Test Lab availability. Contact your local sales office.

Motor Mod Express®

Modification Number	Motor Mod Express® Description and List Price	Working Days Required

Testing continued...

M33C Complete Performance Test

SEVEN * DAYS

A Complete test uses a dynamometer to verify nameplate description and electrical design characteristics. The motor is allowed to achieve its full load temperature rise before making performance measurements.

Testing conducted per IEEE Std 112-2004 Annex C. Test report includes:

- No Load Current
- Full Load Current
- Locked Rotor Current
- High-Potential
- Winding Resistance
- Full Load Heat Run
- Temperature Rise
- Full Load Slip
- Measure breakdown and starting torques
- Measure efficiency at 100%, 75%, 50% of full load
- Measure power factor at 100%, 75%, 50% of full load

NEMA Frame	List Price Per Motor
42 - 215T	4,800
254 - 320T	7,802
360T - 449T*	17,574

Note: For 449T frame 2300 Volt and up please see M32A.

M33D Calibration Test

* CONTACT YOUR LOCAL SALES OFFICE

This test consists of 0 to 125% rated load test measurement of speed, torque, current, power factor and efficiency at rated voltage.

The data is provided as a curve plotted on Baldor-Reliance® standard format.

Tests may also be performed as a witnessed test.

NEMA Frame	Calibration Test
42 - 215T	4,320
254T - 320T	5,756
360T - 449T*	15,826

Note: Not available for 449T frame 2300 Volt and above.

M33E Sound Measurement Test

SEVEN * DAYS

Two tests are available to measure the sound produced by the motor at idle and operated from a line power supply.

The basic test is an overall sound measurement (one band). The Noise test that verifies sound levels per procedures defined in IEEE-85 under a No Load Condition showing an octave band analysis is also available.

Double these prices for witnessed tests.

Note: Sound tests must be performed in Fort Smith or the Motor R&D Lab in Greenville. Allow for extra shipping time and freight charges from plant.

NEMA Frame	List Price Per Motor
42 - 215T	1,970
254 - 445T	2,944
447 - 449T	7,190

Note: * Lead time is dependent on Test Lab availability. Contact your local sales office.

Motor Mod Express®

Modification Number	Motor Mod Express® Description and List Price	Working Days Required

Terminal Blocks

M35A Install IEC Terminal Blocks in Conduit Box and Connect Leads

TWO DAYS

IEC Frame, stocked with terminal blocks.

Advise how motors leads are to be connected.

Does Not Apply to Explosion-Proof Motors

NEMA Frame	List Price
34 FRAME - 56-143T	456
35 FRAME - 56-145T	490
182-184	544
213-215	596
254-256	684
284-286	706
324-326	2,062
364-365	2,062
404-405	2,062
444-449	2,062

Motor Mod Express®

Modification Number	Motor Mod Express® Description and List Price	Working Days Required

Starters

Add Magnetic or Manual Starter to Grinder or Buffer

Mounted and wired on Baldor-Reliance® industrial grinders and buffers.
Starters are in NEMA 1 enclosure and have the push button in cover.
Available only as factory installed options.

Lead time is dependent on delivery of the starter.

Price of the starter is included.

M36A ### Starter – Single Phase — TWO DAYS

Full voltage control.

Some modifications cannot be performed on UL, CSA, or UL/CSA Certified Grinders, Buffers, or Belt Sanders without voiding the Certification.

In such instances, the Certification Mark(s) would need to be removed.

Please contact your sales representative.

Grinder Wheel Size	Buffer Hp	Manual 115/230 Volts List Price	115 Volts List Price	Magnetic 230 Volts List Price
6"	1/3	1,006	1,650	1,844
7"	N/A	1,006	1,650	1,844
8"	3/4	1,006	1,892	1,844
10"	1	1,006	1,892	1,844
N/A	1-1/2	1,006	1,892	1,620
12"	2	Standard Equipment	1,606*	1,620*

Note: Specify voltage when ordering.

*Price includes allowance for omission of standard starter.

M36B ### Starter – Three Phase — TWO DAYS

Full voltage control. **Price of the starter is included.**

Some modifications cannot be performed on UL, CSA, or UL/CSA Certified Grinders, Buffers, or Belt Sanders without voiding the Certification.

In such instances, the Certification Mark(s) would need to be removed.

Please contact your sales representative.

Grinder Wheel Size	Buffer Hp	Manual 208-230/460 Volts List Price	208-230 Volts List Price	Magnetic 460 Volts List Price
7"	N/A	1,162	1,844	1,700
8"	N/A	1,162	1,844	1,700
10"	3/4	1,162	1,844	1,700
12"	1	Standard Equipment	1,300*	1,194*
12"	2	Standard Equipment	1,300*	1,194*

Note: Specify voltage when ordering.

*Price includes allowance for omission of standard starter.

Motor Mod Express®

Modification Number	Motor Mod Express® Description and List Price	Working Days Required

Starters continued...

M36C Magnetic Starter – Three Phase

TWO DAYS

With Low Voltage Control.

Price of the starter is included.

Grinder Wheel Size	Buffer Hp	Magnetic With 110 Volt Control Circuit Transformer 208-230 Volts List Price	460 Volts List Price
7"	N/A	4,142	4,582
8"	N/A	4,142	4,582
10"	3/4	4,142	4,582
12"	1	4,064*	4,148*
12"	2	4,064*	4,148*
14"	5	4,064*	4,148*
14"	7-1/2	4,064*	4,148*

Note: Specify voltage when ordering.

*Price includes allowance for omission of standard starter.

M36D Overload Protection for Dust Control Unit

TWO DAYS

Price of the starter is included.

NEMA Frame	List Price
All	1,238

Note: Must be used with magnetic control. Contact your sales representative for details.

Motor Mod Express®

Modification Number	Motor Mod Express® Description and List Price	Working Days Required

Shaft Grounding

A shaft ground may be specified by many HVAC, pump and conveyor manufacturers to mitigate the effects of Adjustable Speed Drive circulating currents and prolong bearing life. Shaft grounding is available as an option on Baldor-Reliance custom motors or can be installed on a stock motor in Motor Mod Express®. On applications where washdown or debris may be present, mounting the ground internally on the motor (as custom) may be required.

Note: A shaft ground is a sparking device not suited for explosion-proof Division 1 or 2 applications, even when mounted internally.

ABB offers three main types of shaft grounding devices:

- **M39A - Shaft Grounding Systems**
- **M39B - Shaft Grounding Rings**
- **M39C - Shaft Grounding Brush**

M39A Shaft Grounding Systems

THREE DAYS

The SGS™ (Shaft Grounding Systems) design is a robust, enclosed unit designed for harsh environments.

Mounts to the opposite drive end of the motor on TEFC, TENV, TEBC and ODP motors.

Does Not Apply to Explosion-Proof or Division 2 Motors

NEMA Frame	List Price
56 - 449T	2,462

M39B-1 AEGIS® Bearing Protection Ring

TWO DAYS

NEMA Frame	Shaft Diameter	External List Price	Internal List Price
56	0.625	442	1,326
140T, 180	0.875	464	1,392
180T, 210	1.125	488	1,464
210T, 250U	1.375	516	1,548
250T, 280U	1.625	644	1,932
280T, 320U, 320TS, 360TS	1.875	686 (1)	2,058
320T, 360U, 400TS	2.125	758 (1)	2,274
360T, 400U, 440TS	2.375	912 (1)	2,736
400T, 440U	2.875	1,286 (1)	3,858
440T	3.375	1,532 (1)	4,596

(1) Motors over 100 Hp / 75 kW require an additional modification to add an insulated bearing on the opposite drive end. Reference Mod M2F to add for one insulated bearing on the ODE of the motor.

Notes: For this modification, the AEGIS Bearing Protection Ring mounts to the drive end of the motor.

JM motors the AEGIS Bearing Protection Ring can not be mounted internally to the motor.

Motor Mod Express®

Modification Number	Motor Mod Express® Description and List Price	Working Days Required

Shaft Grounding continued...

M39C Baldor-Reliance® Shaft Grounding Brush Assembly

TWO DAYS

Add external or internal shaft grounding brush to motor endplate.

Brush contacts motor shaft diameter.

Does Not Apply to Explosion-Proof Motors

NEMA Frame	External List Price	Internal List Price
48, 56	442	1,326
140	464	1,392
180	488	1,464
210	516	1,548
250	544	1,632
280	582 (1)	1,746 (1)
320	636 (1)	1,908 (1)
360	700 (1)	2,100 (1)
400	772 (1)	2,316 (1)
440	862 (1)	2,586 (1)

(1) Motors over 100 Hp / 75 kW require an additional modification to add an insulated bearing on the opposite drive end.
Reference Mod M2F to add for one insulated bearing on the ODE of the motor.

M39D Add AEGIS® Colloidal Silver Shaft Coating to Shaft

TWO DAYS

Add a coating of AEGIS colloidal silver to shaft of motor to enhance the conductivity of the surface.

List price: $700

Motor Mod Express®

Modification Number	Motor Mod Express® Description and List Price	Working Days Required
Check Total Indicated Runout (TIR)		
M40A	**Check Total Indicated Runout (TIR)** Check C-face and shaft run out. If applicable, check foot flatness. **List price: $246**	TWO DAYS
ABB Ability™		
M43A	**Install ABB Ability™ Smart Sensor for Motors** Pricing includes the installation of a Smart Sensor to NEMA 140 - 440 Cast Iron frames. All sensors mounted through the mod shop come with a 2 year web subscription. Specify between F1, F2 or F3 mounting orientation. **List per motor: $1,548** **Note:** Choosing F3 position may require lifting provisions to be omitted.	CONTACT YOUR LOCAL SALES OFFICE

ABB Mod Express®

Modification Number	ABB Mod Express®	Page No.
VC002	Replace/Add Customer Motor Nameplate	360
VC005	Add Drip Cover	360
VC008	Add IEC B14 C-Face	360
VC009	Add IEC B5 D-Flange	361
VC066	Convert Motor for other than Horizontal Mounting	361
VC096	Fulfilling Marine Duty LR, without Certificate	361
VC122	Bimetal Detectors 150° C	362
VC135	Additional Stainless Motor Nameplate	362
VC148	Routine Test Report	362
VC161	Additional Loose Motor Nameplate	363
VC163	Add Adjustable Speed Motor Nameplate	363
VC186	Fulfilling Marine Duty DNV, without Certificate	363
VC450	Add 100-120V Space Heater	364
VC451	Add 200-240V Space Heater	364
VC502	Pt100 3-wire in stator winding, 1 per phase	365
VC675	Fulfilling Marine Duty ABS, without certificate	365
VCM13E	Remove Mounting Feet	365

ABB Mod Express®
Ordering information

Note: Motors made for sale in the U.S. by ABB must comply with the Integral Motor Horsepower Rule including those modified from stock.
After any modification, the motor must comply with the Integral Motor Horsepower Rule or the applicable regulations such as Natural Resources Canada if used in that country.

Note that 50 Hz efficiency levels may not be the same level when operated at 60 Hz.
Changing the voltage may also change the IE class.

To order, specify the catalog number of the stock product and the MOD variant code number.
Use the motor discount for the motor.

All modifications should be priced using the modification list price, applying the appropriate multiplier symbol for the motor.

Lead times indicated are subject to availability of stock motors in the Fort Smith warehouse.

Customer will absorb all freight costs when motor is shipped to Fort Smith for modification from field warehouses.

Note:

Some modifications do not apply to explosion-proof or hazardous duty motors.

Modifications for process performance aluminum and cast iron, M3AA/M3BP.

Contact your local sales office for approval

MOD Express Cancellation Policy

Should it be necessary to cancel an order for a motor after it is modified, but before it ships – a cancellation charge of double the modification charge will be invoiced to the customer. Any MOD order cancelled before modification is completed is subject to 25% cancellation charge.

Once shipped, modified motors returned at purchaser's expense will be invoiced at double the MOD fee plus 10% restock fee.

Notes

All lead times indicated are subject to availability of stock motors and parts in the Fort Smith warehouse. Please check stock availability before quoting lead time.

Some conversions may not be allowed if they result in a change of operating parameters that affect efficiency or change the EISA or NRCan classification of compliant motors.

Modification prices do not include the cost of the motor, speed reducer, etc.

NEW modifications are indicated with **RED** titles.

ABB Mod Express®

Modification Number	Motor Mod Express® Description and List Price	Working Days Required

VC002 Replace/Add Customer Motor Nameplate

TWO DAYS

Restamp voltage, frequency and output, continuous duty.
Rating data according to quotation and engineering approval.
Rerate must be compliant with pertinent MEPS requirements.
You will be required to provide end destination country.
MotSize data sheet is required.

List per motor: $201

VC005 Add drip cover

TWO DAYS

Add metal drip cover to motor for vertical mounting.

Requires VC066.

Not for ATEX or hazardous duty motors.

IEC Frame Size	Aluminum List Price	Cast Iron List Price
63	N/A	N/A
71 - 80	223	182
90 – 100	162	182
112 – 132	162	182
160	296	331
180	340	380
200	360	403
225	484	542
250	602	675
280	N/A	768

VC008 Add IEC B14 C-Face

TWO DAYS

Add IEC B14 C-face to B3 base mounted motor

(Convert to B34).

Not for ATEX or hazardous duty motors.

IEC Frame Size	Aluminum List Price	Cast Iron List Price
63	270	N/A
71 – 80	255	163
90 – 100	197	236
112 – 132	221	236
160	678	N/A
180	N/A	N/A
200	N/A	N/A
225	N/A	N/A
250	N/A	N/A
280	N/A	N/A

ABB Mod Express®

Modification Number	Motor Mod Express® Description and List Price	Working Days Required

VC009 Add IEC B5 D-Flange

TWO DAYS

Add IEC B5 D-flange to B3 base mounted motor
(Convert to B35).
Not for ATEX or hazardous duty motors.

IEC Frame Size	Aluminum List Price	Cast Iron List Price
63	270	N/A
71 – 80	207	163
90 – 100	297	163
112 – 132	221	235
160	424	617
180	592	661
200	803	898
225	891	997
250	975	1,091
280	N/A	1,124

VC066 Convert motor for other than horizontal mounting

TWO DAYS

Adjust placement of weep holes if motor is used as other than horizontally mounted in normal plane
Not for ATEX or hazardous duty motors.

IEC Frame Size	Aluminum List Price	Cast Iron List Price
63 - 250	83	83

VC096 Fulfilling Marine Duty LR, without certificate (non-essential service only)

TWO DAYS

IEC Frame Size	Aluminum List Price	Cast Iron List Price
63	105	N/A
71 – 80	105	110*
90 - 100	105	110*
112 – 132	105	110*
160 - 180	211	214
200 - 250	296	308
280	N/A	728

* Pricing for IE2 motor only; Variant is not available for IE3 motors.

ABB Mod Express®

Modification Number	Motor Mod Express® Description and List Price	Working Days Required

VC122 Bimetal Detectors 150° C

FIVE DAYS

Install normally-closed winding thermostats (3 in series)

IEC Frame Size	Aluminum List Price	Cast Iron List Price
63	N/A	N/A
71 - 80	254	N/A
90 - 100	289	N/A
112 - 132	303	N/A
160 – 180	N/A	N/A
200 - 250	N/A	N/A
280	N/A	N/A

VC135 Additional Stainless Motor Nameplate

TWO DAYS

Add customer part number, PO, job number, etc.
Not to be used for electrical ratings.

List per motor: $201

VC148 Routine Test Report

SEVEN DAYS

Supply copies of test report for specific motor on order.
Three phase motors will have the following motor characteristics measured.
Test data will be supplied.
All data will be taken on cold motor.

1. Visual inspection.
2. Terminal markings and direction of rotation.
3. Resistance measurement at ambient temperature.
4. No load test (speed and current).
5. Locked rotor test (torque and current).
6. Withstand voltage test (hipot).
7. Insulation resistance measurement (meg ohm).

IEC Frame Size	Aluminum List Price	Cast Iron List Price
63	277	N/A
71 - 80	277	364
90 – 100	296	364
112 – 132	360	402
160 – 180	394	523
200 - 250	507	568
280	N/A	580

ABB Mod Express®

Modification Number	Motor Mod Express® Description and List Price	Working Days Required

VC161 Additional Loose Motor Nameplate

TWO DAYS

Add customer part number, PO, job number, etc.

Not to be used for electrical ratings.

List per motor: $201

VC163 Add Adjustable Speed Motor Nameplate

TWO DAYS

Add adjustable speed nameplate.

Rating data according to quotation and engineering approval.

Rating must be compliant with pertinent MEPS requirements.

You will be required to provide end destination country.

DriveSize data sheet is required.

List per motor: $201

VC186 Fulfilling Marine Duty DNV, without certificate (non-essential service only)

TWO DAYS

IEC Frame Size	Aluminum List Price	Cast Iron List Price
63	104	N/A
71 – 80	104	109*
90 - 100	104	109*
112 – 132	104	109*
160 - 180	192	214
200 - 250	276	309

* Pricing for IE2 motor only; Variant is not available for IE3 motors.

ABB Mod Express®

Modification Number	Motor Mod Express® Description and List Price	Working Days Required

VC450 Add 100-120V Space Heater

FIVE DAYS

Standard space heater is 120V.

Not for ATEX or hazardous duty motors.

IEC Frame Size	Aluminum List Price	Cast Iron List Price
63	493	N/A
71 – 80	493	402
90 – 100	493	402
112 – 132	493	455
160	655	734
180	723	811
200	807	905
225	923	1,034
250	1,112	1,243
280	N/A	N/A

Crusher Duty Motors Only

NEMA Frame Size	ABB Crusher Duty List Price
586-588	1,144

VC451 Add 200-240V Space Heater

FIVE DAYS

Standard space heater is 240V.

Not for ATEX or hazardous duty motors.

IEC Frame Size	Aluminum List Price	Cast Iron List Price
63	493	N/A
71 – 80	493	402
90 – 100	493	402
112 – 132	493	455
160	655	734
180	722	810
200	807	905
225	923	1,034
250	1,112	1,243
280	N/A	N/A

Crusher Duty Motors Only

NEMA Frame Size	ABB Crusher Duty List Price
586-588	1,144

ABB Mod Express®

Modification Number	Motor Mod Express® Description and List Price	Working Days Required

VC502 Pt100 3-wire in stator winding, 1 per phase

FIVE DAYS

Crusher Duty Motors Only

Not for ATEX or hazardous duty motors.

NEMA Frame Size	ABB Crusher Duty List Price
586-588	1,865

VC675 Fulfilling Marine Duty ABS, without certificate (non-essential service only)

TWO DAYS

IEC Frame Size	Aluminum List Price	Cast Iron List Price
80-132	109*	110*
160-180	211	180
200-225	296	309
280	N/A	728

* Pricing for IE2 motor only; Variant is not available for IE3 motors.

VCM13E Remove mounting feet from aluminum motors only (To be used with VC008 or VC009.)

TWO DAYS

IEC Frame Size	Aluminum List Price	Cast Iron List Price
63-132	N/A	N/A
160-180	205	N/A
200-250	273	N/A

Index

Catalog Number	Page Number	List Price	Disc. Sym.	Ship Wgt(1)	Type Code
09-1309	296	478	SVC	21	–
09-1309GLD	295	478	SVC	22	–
09-1309XT	295	478	SVC	21	–
09-1310	296	724	SVC	28	–
09-1310GLD	295	724	SVC	22	–
09-9154CR	296	531	SVC	22	–
09CB5001A01SP	298	100	SVC	2	–
09CB5001A01SP-GLD	298	100	SVC	2	–
09CB5001A15SP	298	84	SVC	2	–
09CB5001A15SP-GLD	298	84	SVC	2	–
10-1304	296	586	SVC	32	–
10-1304GLD	295	586	SVC	32	–
10-1305	296	555	SVC	33	–
10-1305ECP8	296	1,086	SVC	32	–
10-1305GLD	295	555	SVC	32	–
10-1305XT	295	555	SVC	33	–
1021W	314	2,710	GBX	134	3528M
1021WD	314	3,103	GBX	146	3528M
1022W	314	2,748	GBX	133	3528C
1022WD	314	3,147	GBX	145	3528C
105W	314	2,710	GBX	133	3528M
10CB5001A01SP	298	145	SVC	3	–
10CB5001A01SP-GLD	298	145	SVC	3	–
10CB5002A01SP	298	160	SVC	3	–
10CB5002A01SP-GLD	298	160	SVC	3	–
10EP1502A01SP	299	706	SVC	39	–
12-1105	296	683	SVC	25	3528M
12-1105ECP8	296	1,365	SVC	48	3528M
12-1105GLD	295	683	SVC	48	3528M
12-1105XT	295	683	SVC	25	3528M
12-9404CR	296	798	SVC	48	3528M
1215W	315	6,180	GBX	253	3628M
1216W	315	6,397	GBX	248	3628M
1217W	315	6,543	GBX	253	3634L
1250	317	4,726	GBX	164	3634L
1251	317	4,592	GBX	160	3634L
1252	317	4,340	GBX	156	3628M
1253	317	4,216	GBX	156	3628M
129W	315	6,397	GBX	256	3628M
12EP1501A03SP	299	1,218	SVC	61	–
133-6FbA	302	84	SVC	–	–
14009-1	285	1,774	SVC	2	–
1406W	315	7,926	GBX	359	3736M
1407W	315	8,646	GBX	372	3744M
1408W	315	7,926	GBX	358	3735M
1409W	315	8,646	GBX	374	3740M
1410W	315	7,926	GBX	362	3736M
1411W	315	8,646	GBX	381	3740M
1453	317	5,702	GBX	223	3735M
1454	317	6,024	GBX	229	3744M
1457	317	6,337	GBX	228	3744M
1458	317	5,395	GBX	218	3735M
180-5002	297	1,097	SVC	21	3735M
2048-151D	317	3,539	GBX	88	3528L
2048-153D	317	3,373	GBX	76	3516M
210-5001	297	1,449	SVC	45	–
248-151AS	317	4,968	GBX	105	3516M
248-151TD	317	3,916	GBX	95	3528L
248-153TD	317	3,696	GBX	84	3516M
248-181TD	317	4,516	GBX	138	3535LC
248-183TD	317	4,431	GBX	128	3535M
250-5001	297	2,026	SVC	60	3535M
280-5002	297	2,846	SVC	80	–
320-5002	297	3,742	SVC	87	–
330B	317	1,503	GBX	56	3524M
332B	317	1,538	GBX	55	3524C
333B	317	1,538	GBX	56	3524C
334B	317	1,503	GBX	54	3524M
33CB5000A01SP	298	49	SVC	1	–

Catalog Number	Page Number	List Price	Disc. Sym.	Ship Wgt(1)	Type Code
34-171	295	72	SVC	2	3524M
34-3300FD	295	84	SVC	2	3524M
34-3900T	295	72	SVC	1	–
34-3903A	296	88	SVC	2	3524M
34-3903A-GLD	296	88	SVC	2	3524M
34-3903T	295	92	SVC	2	3524M
34-3903T-GLD	295	92	SVC	2	3524M
340	322	916	GBX	31	3424S
342	322	916	GBX	31	3424S
34CB5001A01SP	298	47	SVC	1	–
34CB5001A01SP-GLD	298	47	SVC	1	–
35-1300	295	145	SVC	6	3424S
35-1300GLD	295	145	SVC	6	3424S
35-1325	295	187	SVC	11	3424S
35-1325GLD	295	187	SVC	11	3424S
35-1409	296	208	SVC	11	3424S
35-1409GLD	296	208	SVC	11	3424S
35-3300FD	295	168	SVC	6	3424S
35-3304	295	145	SVC	4	3424S
35-8762	295	145	SVC	3	3424S
35-8762GLD	295	145	SVC	3	3424S
35-8764	296	145	SVC	3	3424S
35-8764GLD	296	145	SVC	3	3424S
353T	322	1,004	GBX	35	3520Q
359T	322	1,006	GBX	36	3520S
35CB5001A01SP	298	51	SVC	1	–
35CB5001A01SP-GLD	298	51	SVC	1	–
35CB5016WWSP	298	43	SVC	2	–
35EP1506A01SP	299	298	SVC	8	–
36-1037	295	166	SVC	7	3520S
36-1037GLD	295	166	SVC	7	3520S
36-1206A	296	214	SVC	13	3520S
36-1206A-GLD	296	214	SVC	13	3520S
36-1206B	296	225	SVC	14	3520S
36-1206B-GLD	296	225	SVC	14	3520S
36-1749	295	210	SVC	12	3520S
36-1749GLD	295	210	SVC	12	3520S
36-3301	295	151	SVC	5	3520S
36-3301FD	295	241	SVC	7	3520S
36-3301FDA	295	241	SVC	6	3520S
36-3301GLD	295	151	SVC	5	3520S
36-3303FD	295	192	SVC	8	3520S
36-3303FDA	295	192	SVC	8	3520S
36-3403	296	140	SVC	5	3520S
36-3403GLD	296	140	SVC	5	3520S
36-486	296	235	SVC	8	3520S
36-486GLD	296	235	SVC	8	3520S
36CB5001A01SP	298	55	SVC	1	–
36CB5001A01SP-GLD	298	55	SVC	1	–
36CB5001A06SP	298	60	SVC	2	–
36CB5001A06SP-GLD	298	60	SVC	2	–
36CB5001A07SP	298	85	SVC	2	–
36CB5016WWSP	298	69	SVC	2	–
36EP1304A62SP	299	334	SVC	15	–
37-1302	295	354	SVC	18	3520S
37-1302GLD	295	354	SVC	18	3520S
37-1304	295	233	SVC	12	3520S
37-1304GLD	295	233	SVC	12	3520S
37-1402	296	332	SVC	18	3520S
37-1402GLD	296	332	SVC	18	3520S
37-1404	296	308	SVC	14	3520S
37-1404GLD	296	308	SVC	14	3520S
37-3301FD	295	268	SVC	12	3520S
37CB5002A06SP	298	60	SVC	2	–
37CB5002A06SP-GLD	298	60	SVC	2	–
37CB5002A07SP	298	60	SVC	4	–
37CB5002A07SP-GLD	298	60	SVC	4	–
37CB5016WWSP	298	80	SVC	5	–
380T	322	1,117	GBX	42	3528L

(1) Shipping weight (lbs.) is approximate.

Index

Catalog Number	Page Number	List Price	Disc. Sym.	Ship Wgt(1)	Type Code
380WCT	322	2,570	GBX	47	3528L
39-1403	296	510	SVC	21	3528L
39-1403GLD	296	510	SVC	21	3528L
39-3400	296	310	SVC	9	3528L
39CB5016WWSP	298	182	SVC	5	–
3AFP9127707	309	–	SS	–	–
3AFP9191436	309	–	SS	1	–
3AFP9225986	309	–	SS	10	–
3AFP9234751	309	–	SS	9	–
3AFP9234757	309	–	SS	1	–
3AFP9234758	309	–	SS	1	–
3AFP9253862	309	–	SS	2	–
3AFP9253863	309	–	SS	–	–
3AFP9253864	309	–	SS	–	–
3BSM045700-A	310	–	SS	25	–
3BSM045705-1	310	–	SS	1	–
3BSM045708-1	310	–	SS	1	–
3GGP072450-ASLUS01	232	1,657	IHA	33	–
3GGP082440-ASKUS02	232	1,766	IHA	44	–
3GGP082470-ASKUS02	232	1,846	IHA	49	–
3GGP092530-ADKUS02	232	2,004	IHA	73	–
3GGP092530-ASKUS02	232	2,004	IHA	73	–
3GGP092540-ADKUS02	232	2,171	IHA	75	–
3GGP092540-ASKUS02	232	2,171	IHA	75	–
3GGP102810-ADKUS02	232	2,418	IHA	108	–
3GGP102810-ASKUS02	232	2,418	IHA	108	–
3GGP102820-ADKUS02	232	2,737	IHA	108	–
3GGP102820-ASKUS02	232	2,737	IHA	108	–
3GGP112370-ADKUS02	232	3,042	IHA	115	–
3GGP112370-ASKUS02	232	3,042	IHA	115	–
3GGP132260-ADKUS02	232	3,533	IHA	179	–
3GGP132260-ASKUS02	232	3,533	IHA	179	–
3GGP132270-ADKUS02	232	4,027	IHA	179	–
3GGP132270-ASKUS02	232	4,027	IHA	179	–
3GGP162410-ADKUS02	232	5,476	IHA	414	–
3GGP162420-ADKUS02	232	6,477	IHA	414	–
3GGP182410-ADKUS02	232	7,292	IHA	518	–
3GGP182420-ADKUS02	232	8,527	IHA	518	–
3GGP202410-ADKUS02	232	10,340	IHA	703	–
3GGP222210-ADKUS02	232	12,243	IHA	877	–
3GGP222220-ADKUS02	232	14,711	IHA	877	–
3GGP252210-ADKUS02	232	17,478	IHA	1049	–
3GGP282220-ADKUS03	232	29,231	IHA	1466	–
3GGP282230-ADKUS03	232	32,570	IHA	1598	–
3GKP082440-ADKUS04	233	3,285	IHA	88	–
3GKP082440-ASKUS04	233	3,285	IHA	88	–
3GKP082470-ADKUS04	233	3,382	IHA	90	–
3GKP082470-ASKUS04	233	3,382	IHA	90	–
3GKP092030-ADKUS04	233	3,679	IHA	115	–
3GKP092030-ASKUS04	233	3,679	IHA	115	–
3GKP092540-ADKUS04	233	3,926	IHA	117	–
3GKP092540-ASKUS04	233	3,926	IHA	117	–
3GKP102810-ADKUS04	233	4,444	IHA	154	–
3GKP102810-ASKUS04	233	4,444	IHA	154	–
3GKP102820-ADKUS04	233	4,882	IHA	154	–
3GKP102820-ASKUS04	233	4,882	IHA	154	–
3GKP112370-ADKUS04	233	5,686	IHA	157	–
3GKP112370-ASKUS04	233	5,686	IHA	157	–
3GKP132260-ADKUS04	233	6,651	IHA	243	–
3GKP132260-ASKUS04	233	6,651	IHA	243	–
3GKP132270-ADKUS04	233	7,553	IHA	243	–
3GKP132270-ASKUS04	233	7,553	IHA	243	–
3GKP162410-ADKUS04	233	9,145	IHA	516	–
3GKP162420-ADKUS04	233	10,847	IHA	558	–
3GKP182410-ADKUS04	233	13,578	IHA	628	–
3GKP182420-ADKUS04	233	14,747	IHA	639	–
3GKP202410-ADKUS04	233	18,333	IHA	750	–
3GKP222210-ADKUS04	233	22,230	IHA	869	–
3GKP222220-ADKUS04	233	24,667	IHA	950	–

Catalog Number	Page Number	List Price	Disc. Sym.	Ship Wgt(1)	Type Code
3GKP252210-ADKUS04	233	29,956	IHA	974	–
3GKP282220-ADKUS04	233	41,300	IHA	1475	–
3GKP282230-ADKUS05	233	45,641	IHA	1607	–
40-1400	296	540	SVC	28	3528L
40-1400GLD	296	540	SVC	30	3528L
40-1401	296	569	SVC	40	3528L
40-1401GLD	296	569	SVC	40	3528L
407B	317	2,041	GBX	60	3528C
409B	317	1,960	GBX	59	3528M
410B	317	2,008	GBX	61	3528C
412B	317	1,960	GBX	62	3528M
413336-1R	279	2,295	SVC	20	3528M
413336-2R	279	2,295	SVC	5	3528M
417077-102	255, 280	1,415	SVC	6	–
417077-124	255, 280	2,300	SVC	17	–
417077-126	280	5,756	SVC	225	3528M
417077-127	280	2,579	SVC	117	3528M
417077-130	255	1,367	SVC	64	3528M
417077-131	255	1,367	SVC	90	3528M
417077-133	252	1,752	SVC	4	3528M
417077-136	252	1,752	SVC	4	3528M
417077-141	256	1,387	SVC	6	3528M
417077-143	256	1,090	SVC	5	3528M
417077-144	256	1,387	SVC	72	3528M
417077-145	256	2,130	SVC	82	3528M
417077-151	252	2,503	SVC	12	3528M
417077-153	252	2,393	SVC	9	3528M
417077-156	252	2,997	SVC	14	3528M
417077-165	252	1,752	SVC	14	3528M
417077-167	252	2,503	SVC	20	3528M
417077-168	252	2,997	SVC	10	3528M
417077-170	252	2,173	SVC	10	3528M
417077-173	252	2,612	SVC	10	3528M
417077-182	252	2,612	SVC	10	3528M
417077-183	252	2,612	SVC	15	3528M
417708-184	253	1,443	SVC	–	–
417708-185	253	1,443	SVC	–	–
417708-186	253	1,276	SVC	–	–
417708-187	253	1,443	SVC	–	–
417077-188	252	1,752	SVC	10	3528M
417077-189	252	1,752	SVC	10	3528M
417077-191	252	2,503	SVC	10	3528M
417077-192	252	2,997	SVC	10	3528M
417077-201	255	2,102	SVC	–	–
417077-202	255	1,519	SVC	122	3528M
417077-205	252	2,612	SVC	20	–
417077-206	252	2,997	SVC	5	–
417077-208TL	252	1,752	SVC	5	3528M
417077-212TL	252	1,752	SVC	6	3528M
417077-213TL	252	1,752	SVC	6	3528M
417077-242TL	252	2,173	SVC	6	3528M
417077-244	252	1,752	SVC	4	3528M
417077-245	252	2,855	SVC	9	–
417077-246	252	2,612	SVC	10	–
417077-300	252	3,152	SVC	5	3528M
417077-301	252	4,155	SVC	13	3528M
417077-302	252	4,155	SVC	15	3528M
417077-303	252	4,155	SVC	15	3528M
417077-304	252	4,155	SVC	15	3528M
417077-305	252	3,912	SVC	5	3528M
417077-51	280	1,811	SVC	34	3528M
417077-57	255, 280	1,107	SVC	2	–
417077-58	280	1,107	SVC	4	3528M
417077-59	255, 280	1,107	SVC	4	–
417077-65	280	1,415	SVC	7	3528M
417077-74	280	2,579	SVC	80	3528M
417077-75	280	2,823	SVC	85	3528M
417708-120	252	2,997	SVC	23	3528M
417708-126	279	6,230	SVC	6	3528M

(1) Shipping weight (lbs.) is approximate.

Index

Catalog Number	Page Number	List Price	Disc. Sym.	Ship Wgt(1)	Type Code
417708-133	279	4,903	SVC	9	3528M
417708-134	279	4,903	SVC	5	3528M
417708-135	279	4,903	SVC	5	3528M
417708-136	279	6,230	SVC	6	3528M
417708-137	279	6,230	SVC	6	3528M
417708-151	279	4,903	SVC	5	3528M
417708-156	279	2,295	SVC	5	3528M
417708-184	253	834	SVC	3	3528M
417708-185	253	966	SVC	11	3528M
417708-186	253	973	SVC	13	3528M
417708-187	253	1,071	SVC	13	3528M
417708-188	253	1,054	SVC	13	–
417708-189	253	721	SVC	3	–
417708-201	253	577	SVC	2	3528M
417708-202	253	577	SVC	1	3528M
417708-203	253	577	SVC	1	3528M
417708-21	279	2,295	SVC	7	3528M
417708-22	279	2,295	SVC	9	3528M
417708-26	279	2,295	SVC	7	3528M
417708-27	279	2,295	SVC	9	3528M
417708-32	279	3,844	SVC	5	3528M
417708-33	279	3,844	SVC	5	3528M
417708-34	279	4,573	SVC	5	3528M
417708-36	279	4,573	SVC	5	3528M
417708-37	279	4,573	SVC	5	3528M
417708-41	279	1,325	SVC	2	3528M
417708-42	279	1,325	SVC	0	3528M
417708-85	252	2,306	SVC	5	3528M
417708-87	252	2,745	SVC	6	3528M
417709-17	279	5,157	SVC	6	3528M
417709-65	279	5,157	SVC	6	3528M
417709-66	279	5,157	SVC	9	3528M
417709-67	279	5,157	SVC	15	3528M
418057-501	256	3,360	SVC	1	–
418057-645	256	1,197	SVC	5	–
418057-764	256	2,020	SVC	2	–
418057-786	256	1,181	SVC	2	–
419914-10A	254	899	SVC	30	–
419914-10B	254	899	SVC	27	–
419914-10D	254	1,020	SVC	48	–
419914-10G	254	1,154	SVC	67	–
419914-10K	254	1,222	SVC	80	–
419914-10L	254	1,020	SVC	52	3528M
419914-10M	254	1,020	SVC	48	–
419914-10N	254	1,853	SVC	38	–
419914-10P	254	1,804	SVC	50	3528M
419914-10R	254	1,727	SVC	42	–
419914-10S	254	1,727	SVC	90	–
419914-11G	254	4,580	SVC	141	–
419914-11N	254	2,168	SVC	124	3528M
419914-11P	254	1,849	SVC	108	–
419914-11R	254	1,849	SVC	130	–
419914-1B	280	856	SVC	33	–
419914-1D	280	1,951	SVC	69	–
419914-1E	280	2,631	SVC	76	–
419914-1S	280	1,485	SVC	36	–
419914-1T	280	1,485	SVC	40	–
419914-9A	254	899	SVC	13	3528M
419914-9B	254	899	SVC	14	3528M
419914-9C	254	899	SVC	15	3528M
419914-9D	254	899	SVC	17	3528M
419914011F	254	3,008	SVC	5	–
419914011H	254	5,675	SVC	140	–
419914011J	254	5,675	SVC	150	–
419914011K	254	5,675	SVC	160	–
419914011L	254	5,675	SVC	100	–
419914011M	254	1,970	SVC	105	–
419947-29	280	1,811	SVC	82	3528M
419947-30	280	1,811	SVC	85	3528M
419947-32	280	2,215	SVC	84	3528M
419947-34	280	2,579	SVC	90	3528M
419947-40	256	2,122	SVC	10	3528M
419947-41	256	2,579	SVC	110	3528M
419947-42	256	2,823	SVC	92	3528M
419947-43	256	2,361	SVC	100	3528M
42-1300	296	911	SVC	36	3528M
42-1300GLD	296	911	SVC	36	3528M
42-1400	296	886	SVC	44	3528M
42-1400GLD	296	886	SVC	30	3528M
42384-26BE	280	1,183	SVC	30	–
44-1402	295	1,319	SVC	40	3528M
44-1402GLD	295	1,319	SVC	40	3528M
44-1403	295	1,319	SVC	40	3528M
44-1403A	296	1,025	SVC	40	3528M
44-1403A-GLD	296	1,025	SVC	40	3528M
44-1403GLD	295	1,319	SVC	40	3528M
500	316	2,928	GBX	109	3524C
510	316	2,928	GBX	109	3524M
522	316	3,294	GBX	108	3524C
532	316	3,294	GBX	109	3524M
712	313	1,124	GBX	45	3420C
712E	313	1,314	GBX	68	3420C
712R	318	1,124	GBX	45	3420C
712RE	318	1,346	GBX	68	3420C
7306	313	1,424	GBX	70	3420C
7306D	313	1,791	GBX	84	3420C
7307	313	1,424	GBX	70	3420C
7307D	313	1,791	GBX	84	3420C
7308	313	1,424	GBX	71	3420M
7309	313	1,424	GBX	72	3420M
7309D	313	1,791	GBX	87	3420M
7312D	313	2,166	GBX	90	3428LC
7351	313	1,424	GBX	67	3420C
762	313	1,124	GBX	43	3420C
762E	313	1,314	GBX	68	3420C
762R	318	1,124	GBX	43	3420C
762RE	318	1,346	GBX	66	3420C
802386201R	162	1,791	SCG	23	–
802386201T	162	2,887	SCG	42	–
802386201V	162	4,619	SCG	81	–
802386203R	162	1,286	SCG	17	–
802386203T	162	1,805	SCG	50	–
802386203V	162	2,887	SCG	51	–
802386204R	162	1,937	SCG	32	–
802386204T	162	3,143	SCG	58	–
802386204V	162	5,006	SCG	110	–
8100W	314	2,156	GBX	99	3524C
8100WD	314	2,459	GBX	110	3524C
8102W	314	2,087	GBX	98	3524M
8102WD	314	2,420	GBX	111	3524M
8107W	314	2,156	GBX	99	3524L
8107WD	314	2,459	GBX	111	3524C
8123W	314	2,087	GBX	99	3524M
8123WD	314	2,420	GBX	112	3524M
8125W	314	2,087	GBX	99	3524M
812RE	318	2,038	GBX	96	3524C
8250W	314	2,156	GBX	97	3524C
8252W	314	2,087	GBX	95	3524M
862RE	318	2,038	GBX	95	3524L
A103	321	69	SVC	1	–
A65	321	37	SVC	1	–
A82	321	46	SVC	1	–
AB248	320	38	SVC	1	–
AEM2237-4	211	5,470	DPL	270	0932M
AEM2238-4	211	6,615	DPL	270	0932M
AEM2333-4	211	9,190	DPL	268	0944M
AEM2334-4	211	11,079	DPL	420	1046M
AEM3683-4	211	2,360	DPL	89	0620M

(1) Shipping weight (lbs.) is approximate.

Index

Catalog Number	Page Number	List Price	Disc. Sym.	Ship Wgt(1)	Type Code
AEM3686-4	211	2,534	DPL	91	0626M
AEM3689-4	211	2,699	DPL	91	0626M
AEM3783-4	211	3,114	DPL	155	0728M
AEM3787-4	211	4,077	DPL	166	0728M
AEM4103-4	211	14,122	DPL	437	1056M
AEM4104-4	211	15,955	DPL	469	1250M
AEM4307-4	211	18,958	DPL	874	A36050M
AEM4311-4	211	22,831	DPL	915	A36062M
AEM4314-4	211	27,896	DPL	1326	A40064M
AFL3504A	201	626	FD1	32	3424LC
AFL3510A	201	906	FD1	47	3528LC
AFL3520A	201	657	FD1	29	3420L
AFL3521A	201	774	FD1	39	3524L
AFL3522A	201	1,072	FD1	43	3528L
AFL3523A	201	1,309	FD1	51	3535L
AFL3524A	201	1,365	FD1	52	3535LC
AFL3525A	201	1,001	FD1	42	3528L
AFM3528	201	665	FD3	24	3413M
AFM3529	201	723	FD3	22	3416M
AFM3530	201	835	FD3	30	3424M
AFM3532	201	1,107	FD3	45	3528M
ANFL3501M	200	904	FD1	24	3414L
ANFL3504M	200	1,014	FD1	28	3421L
ANFL3507M	200	1,182	FD1	34	3428LC
ANFL3510M	200	1,459	FD1	41	3524L
ANFL3514M	200	2,165	FD1	49	3532LC
AOM25904T	186	5,259	HV3	208	3936M
AOM3454	186	555	HV3	18	3410M
AOM3455	186	871	HV3	19	3411M
AOM3458	186	619	HV3	18	3410M
AOM3535	186	917	HV3	22	3414M
AOM3538	186	728	HV3	25	3413M
AOM3539	186	988	HV3	24	3418M
AOM3542	186	784	HV3	23	3416M
AOM3543	186	1,016	HV3	31	3428M
AOM3546T	186	815	HV3	33	3428M
AOM3554T	186	848	HV3	34	3520M
AOM3556T	186	1,031	HV3	35	3520M
AOM3558T	186	899	HV3	38	3524M
AOM3607T	186	1,179	HV3	50	3618M
AOM3611T	186	1,054	HV3	59	3622M
AOM3614T	186	1,265	HV3	63	3628M
AOM3615T	186	1,219	HV3	71	3634M
AOM3617T	186	1,996	HV3	62	3622M
AOM3702T	186	3,028	HV3	97	3724M
AOM3704T	186	1,584	HV3	92	3720M
AOM3705T	186	3,310	HV3	113	3744M
AOM3708T	186	2,267	HV3	115	3732M
AOM3710T	186	1,563	HV3	106	3728M
AOM3714T	186	1,894	HV3	126	3740M
ARB-1	319	184	SVC	1	–
ARB-2	319	280	SVC	2	–
B102	321	127	SVC	8	–
B103	321	127	SVC	6	–
B125	315, 321	289	SVC	22	–
B126	315, 321	291	SVC	22	–
B143T	302, 303	166	SVC	6	–
B145T	302, 303	166	SVC	7	–
B147	315, 321	545	SVC	42	–
B148	315, 321	545	SVC	41	–
B182T	302, 303	176	SVC	10	–
B184T	302, 303	176	SVC	10	–
B213T	302, 303	204	SVC	14	–
B215T	302, 303	204	SVC	15	–
B254T	302, 303	335	SVC	21	–
B256T	302, 303	335	SVC	21	–
B284T	302, 303	381	SVC	24	–
B286T	302, 303	381	SVC	24	–
B324T	302, 303	589	SVC	34	–

Catalog Number	Page Number	List Price	Disc. Sym.	Ship Wgt(1)	Type Code
B326T	302, 303	589	SVC	37	–
B364T	302, 303	733	SVC	48	–
B365T	302, 303	733	SVC	50	–
B404T	302, 303	1,090	SVC	62	–
B405T	302, 303	1,090	SVC	66	–
B444T	302, 303	1,332	SVC	70	–
B445T	302, 303	1,332	SVC	71	–
B447T	302, 303	1,570	SVC	93	–
B449T	302, 303	1,570	SVC	99	–
B48T	302, 303	129	SVC	3	–
B5000RLS	303	–	SVC	62	–
B56T	302, 303	129	SVC	5	–
B73	321	72	SVC	4	–
B74	321	72	SVC	3	–
B80	321	86	SVC	5	–
B81	321	86	SVC	4	–
BC138	288, 293	359	PMS	1	–
BC139	288, 293	359	PMS	1	–
BC140	288, 293	608	PMS	3	–
BC140-FBR	288, 293	840	PMS	3	–
BC141	289, 294	333	PMS	1	–
BC141-SIH	289	785	PMS	3	–
BC142	289, 294	333	PMS	2	–
BC142-5	289, 294	371	PMS	3	–
BC142-6	289, 294	369	PMS	1	–
BC142-6-SIH	289	822	PMS	1	–
BC142-SIH	289	822	PMS	3	–
BC143	288, 292	119	PMS	2	–
BC144	288	204	PMS	1	–
BC145	288, 291	347	PMS	1	–
BC147	288	49	PMS	1	–
BC148	288	21	PMS	1	–
BC149	288	25	PMS	1	–
BC152	288	318	PMS	1	–
BC153	291	367	PMS	1	–
BC154	291, 293	769	PMS	5	–
BC154-P	291	769	PMS	3	–
BC154-R	291	1,014	PMS	3	–
BC154-SI	291	1,237	PMS	3	–
BC155	289, 294	1,087	PMS	5	–
BC156	291	239	PMS	1	–
BC157	291	44	PMS	1	–
BC158	291	99	PMS	1	–
BC159	291	53	PMS	1	–
BC160	291, 293	884	PMS	3	–
BC200	289, 292, 294	1,159	PMS	4	–
BC201	289, 292, 294	1,377	PMS	6	–
BC203	289, 292, 294	1,732	PMS	10	–
BC204	289, 292, 294	621	PMS	3	–
BC204-BPSI	289, 292	802	PMS	3	–
BC212	292	356	PMS	1	–
BC215	292	165	PMS	3	–
BC216	292	127	PMS	1	–
BC218	288, 292	81	PMS	1	–
BC24-LF	288	124	PMS	1	–
BC245	292	351	PMS	1	–
BC253	292	44	PMS	1	–
BC254	291, 292, 293	1,108	PMS	5	–
BC254-FBR	291, 292, 293	1,163	PMS	3	–
BC258	292	99	PMS	1	–
BC259	292	69	PMS	5	–
BC354	291, 293	1,191	PMS	5	–
BCWD140	291, 293	1,029	PMS	6	–
BEI HS35	253	–	–	–	–
BL3507	218	2,396	BE1	42	3428LC
BL3510	218	2,536	BE1	52	3524L
BL3516	216	1,548	BE1	27	3414L
BL3517	216	1,632	BE1	27	3414L
BL3518	216	1,770	BE1	32	3421L

(1) Shipping weight (lbs.) is approximate.

Index

Catalog Number	Page Number	List Price	Disc. Sym.	Ship Wgt(1)	Type Code
BLWL05-L	265	1,099	SVC	7	–
BLWL06-L	265	1,276	SVC	8	–
BLWL07-L	265	2,126	SVC	21	–
BLWL09-L	265	2,217	SVC	28	–
BLWL10-L	265	2,247	SVC	35	–
BLWL12-L	265	2,247	SVC	46	–
BLWL14-L	265	2,247	SVC	55	–
BLWM07-F	265	1,409	SVC	20	–
BLWM09-F	265	1,525	SVC	30	–
BLWM10-F	265	1,761	SVC	25	–
BLWM12-F	265	1,761	SVC	46	–
BLWM14-F	265	2,900	SVC	55	–
BLWM16-F	265	3,371	SVC	70	–
BLWM18-F	265	3,517	SVC	166	–
BM3108	220	1,495	BO3	27	3416M
BM3112	220	1,741	BO3	31	3420M
BM3116	220	1,951	BO3	33	3424M
BM3538	216	1,635	BE3	31	3420M
BM3539	216	2,253	BE3	35	3418M
BM3542	216	1,913	BE3	31	3420M
BM3543	216	2,365	BE3	39	3428M
BM3569	216	1,505	BE3	27	3416M
BNM3538-D	214	1,571	UH3	43	3512M
BNM3542-D	214	2,136	UH3	47	3514M
BR0006	290	18	PMS	1	–
BR0010SP	290	18	PMS	1	–
BR0015SP	290	18	PMS	1	–
BR0025	290	18	PMS	1	–
BR0035	290	18	PMS	1	–
BR0050	290	18	PMS	1	–
BR0100	290	18	PMS	1	–
BR0101	290	18	PMS	1	–
BR0180	290	18	PMS	1	–
BR0250	290	18	PMS	1	–
BR0251	290	18	PMS	1	–
BR0350	290	40	PMS	1	–
BR0510	290	18	PMS	1	–
BR1000	290	18	PMS	1	–
C121	316	263	SVC	3	–
C61	316	263	SVC	5	–
CB1814T	304	166	SVC	2	–
CB2118T	304	196	SVC	2	–
CB2521T	304	225	SVC	6	–
CB2825T	304	304	SVC	7	–
CB3228T	304	420	SVC	9	–
CB3632T	304	517	SVC	12	–
CB4036T	304	709	SVC	20	–
CB5049T	68, 304	3,960	SVC	328	–
CB50549T	68	4,452	SVC	328	3514M
CB5844T	68	9,257	SVC	465	3514M
CBK003-1	297	813	SVC	12	–
CBK006-1	297	1,197	SVC	12	–
CBK006-2	297	1,197	SVC	12	–
CBK010-1	297	1,397	SVC	12	–
CBK015-1	297	2,096	SVC	12	–
CBL015ZD-2	263	240	SVC	1	–
CBL030ZD-2	263	279	SVC	1	–
CBL046ZD-2	263	319	SVC	2	–
CBL061ZD-2	263	353	SVC	2	–
CBL091ZD-2	263	431	SVC	3	–
CBL152ZD-2	263	579	SVC	6	–
CBL229ZD-2	263	768	SVC	8	–
CBL305ZD-2	263	956	SVC	8	–
CBL455ZD-2	263	1,242	SVC	15	–
CBL606ZD-2	263	1,709	SVC	16	–
CBLST2TL	263	486	SVC	2	–
CBLTL2ST	263	486	SVC	1	–
CBXM18342T	118	10,237	XPB	184	0632M
CBXM18542T	118	12,332	XPB	241	0640M
CBXMN050542	118	5,444	XPB	75	3512M
CBXMN050742	118	6,063	XPB	86	3518M
CBXMN14142T	118	8,037	XPB	88	3524M
CBXMN18242T	118	9,729	XPB	141	3630M
CCPX18326T	122	4,133	XSM	127	0618M
CCPX18346T	122	3,412	XSM	111	0632M
CCPX18526T	122	4,756	XSM	122	0640M
CCPX18546T	122	3,954	XSM	123	0642M
CCPX21126T	122	5,691	XSM	174	0730M
CCPX21146T	122	6,554	XSM	252	0750M
CCPX21366T	122	5,421	XSM	221	0736M
CCPX21726T	122	5,449	XSM	169	0726M
CCPX21746T	122	4,917	XSM	228	0738M
CCPX251526T	122	6,850	XSM	270	0934M
CCPX251546T	122	7,846	XSM	302	0944M
CCPX25166T	122	8,447	XSM	335	0960M
CCPX25226T	122	8,981	XSM	314	0950M
CCPX25246T	122	9,854	XSM	335	0960M
CCPX25766T	122	7,203	XSM	322	0954M
CCPX281566T	122	13,277	XSM	438	1046M
CCPX282526T	122	11,581	XSM	525	1048M
CCPX282546T	122	12,035	XSM	447	1054M
CCPX28266T	122	13,595	XSM	459	1056M
CCPX28326T	122	13,811	XSM	495	1046M
CCPX28346T	122	14,375	XSM	459	1056M
CCPX322566T	122	16,906	XSM	741	1260M
CCPX32366T	122	18,487	XSM	766	1264M
CCPX32426T	122	17,117	XSM	745	1252M
CCPX32446T	122	19,052	XSM	720	1254M
CCPX32526T	122	21,468	XSM	766	1264M
CCPX32546T	122	21,858	XSM	782	1276M
CCPX36466T	122	21,469	XSM	908	A36062M
CCPX36566T	122	23,987	XSM	982	A3668M
CCPX36626T	122	24,451	XSM	999	A36056M
CCPX36646T	122	24,557	XSM	910	A36062M
CCPX36726T	122	25,420	XSM	1005	A36068M
CCPX36746T	122	26,821	XSM	965	A36070M
CCPX40666T	122	30,272	XSM	1322	A40064M
CCPX40766T	122	31,270	XSM	1322	A40064M
CD1803R	274	15,665	R3B	212	–
CD1805R	274	17,536	R3B	175	–
CD2003P-2	283	14,659	RSV	170	–
CD2003R-2	274	18,561	R3B	198	–
CD2005P-2	283	14,884	RSV	170	–
CD2005R-2	274	18,759	R3B	209	–
CD2007P-2	283	17,009	RSV	222	–
CD2007R-2	274	18,947	R3B	235	–
CD2010P-2	283	17,616	RSV	250	–
CD2015P-2	283	19,994	RSV	408	–
CD2015R-BV	276	26,149	R3B	345	–
CD2105R	274	22,253	R3B	355	–
CD3425	272	1,186	WFS	23	–
CD3433	272	1,296	WFS	24	–
CD3434	272	1,296	WFS	24	–
CD3450	272	1,474	WFS	29	–
CD3451	272	1,474	WFS	29	–
CD3475	272	1,833	WFS	34	–
CD3476	272	1,833	WFS	34	–
CD5318	272	2,587	WFS	54	–
CD5319	272	2,587	WFS	53	–
CD5333	272	1,869	WFS	31	–
CD5350	272	2,063	WFS	38	–
CD5375	272	2,429	WFS	45	–
CD6202	272	4,576	WFS	98	–
CD6203	272	5,197	WFS	135	–
CD6215	272	3,870	WFS	84	–
CD6218	272	3,456	WFS	65	–
CD6219	272	3,456	WFS	66	–
CD7502	272	8,031	WFS	105	–

(1) Shipping weight (lbs.) is approximate.

Index

Catalog Number	Page Number	List Price	Disc. Sym.	Ship Wgt(1)	Type Code
CD7503	272	8,541	WFS	137	–
CDD1803R	274	16,117	R3B	160	–
CDM3537	64	990	SDD	26	3414M
CDM3538	64	1,030	SDD	29	3420M
CDM3539	64	1,336	SDD	30	3428M
CDM3542	64	1,070	SDD	33	3428M
CDM3543	64	1,355	SDD	38	3518M
CDMG2310	284	17,918	RSV	250	–
CDMG2315	284	26,225	RSV	250	–
CDMG2320	284	29,276	RSV	613	–
CDMG2325	284	31,854	RSV	886	–
CDMG2333	284	39,962	RSV	880	–
CDP3306	267	1,179	PMS	23	–
CDP3310	267	1,179	PMS	24	–
CDP3316	267	1,243	PMS	27	–
CDP3320	267	1,391	PMS	27	–
CDP3326	267	1,391	PMS	31	–
CDP3330	267	1,391	PMS	32	–
CDP3335	267	1,243	PMS	26	–
CDP3410-V12	271	1,268	PMS	23	–
CDP3410-V24	271	1,202	PMS	23	–
CDP3420-V12	271	1,391	PMS	31	–
CDP3420-V24	271	1,327	PMS	31	–
CDP3430-V12	271	1,442	PMS	37	–
CDP3430-V24	271	1,375	PMS	35	–
CDP3436	267	1,689	PMS	38	–
CDP3440	267	1,689	PMS	38	–
CDP3440-V12	271	2,070	PMS	42	–
CDP3440-V24	271	2,058	PMS	41	–
CDP3443	267	1,495	PMS	36	–
CDP3445	267	2,055	PMS	44	–
CDP3445-V12	271	2,994	PMS	45	–
CDP3445-V24	271	2,980	PMS	46	–
CDP3450	267	1,689	PMS	38	–
CDP3455	267	2,055	PMS	44	–
CDP3460	267	1,689	PMS	38	–
CDP3575	267	3,784	PMS	65	–
CDP3580	267	3,293	PMS	53	–
CDP3585	267	4,515	PMS	74	–
CDP3590	267	3,784	PMS	66	–
CDP3603	267	5,561	PMS	112	–
CDP3604	267	5,530	PMS	112	–
CDP3605	267	9,437	PMS	161	–
CDPSWD3406	269	1,828	PMS	28	–
CDPSWD3410	269	1,828	PMS	29	–
CDPSWD3426	269	2,165	PMS	38	–
CDPSWD3430	269	2,165	PMS	37	–
CDPSWD3545	269	3,199	PMS	63	–
CDPSWD3555	269	3,199	PMS	63	–
CDPT3306	268	3,366	PMS	27	–
CDPT3310	268	3,366	PMS	27	–
CDPT3316	268	3,433	PMS	30	–
CDPT3320	268	3,433	PMS	30	–
CDPT3326	268	3,649	PMS	36	–
CDPT3330	268	3,433	PMS	35	–
CDPT3436	268	3,860	PMS	45	–
CDPT3440	268	3,860	PMS	44	–
CDPT3445	268	4,306	PMS	50	–
CDPT3455	268	4,306	PMS	50	–
CDPT3575	268	5,976	PMS	71	–
CDPT3585	268	6,705	PMS	79	–
CDPT3603	268	7,799	PMS	122	–
CDPT3605	268	11,667	PMS	164	–
CDPWD3306	269	1,526	PMS	24	–
CDPWD3310	269	1,526	PMS	25	–
CDPWD3316	269	1,612	PMS	27	–
CDPWD3320	269	1,612	PMS	27	–
CDPWD3326	269	1,813	PMS	32	–
CDPWD3330	269	1,813	PMS	32	–
CDPWD3436	269	2,187	PMS	38	–
CDPWD3440	269	2,187	PMS	38	–
CDPWD3445	269	2,668	PMS	44	–
CDPWD3455	269	2,668	PMS	44	–
CDPWD3575	269	5,103	PMS	66	–
CDPWD3585	269	4,443	PMS	75	–
CDPWD3603	269	7,794	PMS	116	–
CDPWD3605	269	13,201	PMS	157	–
CDPX3406	268	3,236	PMS	38	–
CDPX3410	268	3,236	PMS	38	–
CDPX3416	268	4,064	PMS	44	–
CDPX3420	268	4,064	PMS	43	–
CDPX3426	268	4,589	PMS	46	–
CDPX3430	268	4,589	PMS	46	–
CDPX3436	268	5,673	PMS	51	–
CDPX3440	268	5,673	PMS	51	–
CDPX3545	268	7,555	PMS	73	–
CDPX3555	268	7,555	PMS	71	–
CDPX3575	268	8,075	PMS	81	–
CDRX050544	124	1,764	XDM	37	3512M
CDRX050744	124	1,928	XDM	33	3514M
CDRX05144	124	2,557	XDM	50	3520M
CDRX14124T	124	2,406	XDM	41	3516M
CDRX14124T-5	126	2,406	XDM	41	3516M
CDRX14144T	124	2,570	XDM	50	3520M
CDRX14144T-5	126	2,570	XDM	50	3520M
CDRX141524T	124	2,538	XDM	47	3520M
CDRX141544T	124	2,608	XDM	50	3526M
CDRX14164T	124	3,208	XDM	49	3526M
CDRX14224T	124	2,948	XDM	46	3526M
CDRX14224T-5	126	2,948	XDM	55	3526M
CDRX14244T	124	2,673	XDM	48	3528M
CDRX14244T-5	126	2,673	XDM	59	3528M
CDRX181564T	124	4,230	XDM	149	0630M
CDRX18264T	124	4,561	XDM	152	0642M
CDRX18324T	124	3,936	XDM	127	0618M
CDRX18324T-5	126	3,936	XDM	127	0618M
CDRX18344T	124	3,254	XDM	111	0632M
CDRX18344T-5	126	3,254	XDM	127	0632M
CDRX18524T	124	4,525	XDM	150	0640M
CDRX18524T-5	126	4,525	XDM	150	0640M
CDRX18544T	124	3,766	XDM	123	0642M
CDRX18544T-5	126	3,766	XDM	152	0642M
CDRX21124T	124	5,411	XDM	174	0730M
CDRX21124T-5	127	5,411	XDM	235	0742M
CDRX21144T	124	6,228	XDM	252	0750M
CDRX21144T-5	127	6,228	XDM	252	0750M
CDRX21364T	124	5,129	XDM	221	0736M
CDRX21564T	124	5,632	XDM	245	0748M
CDRX21724T	124	5,182	XDM	184	0726M
CDRX21724T-5	126	5,182	XDM	169	0726M
CDRX21744T	124	4,680	XDM	154	0738M
CDRX21744T-5	126	4,680	XDM	193	0738M
CDRX251524T	124	6,534	XDM	349	0934M
CDRX251524T-5	127	6,534	XDM	349	0934M
CDRX251544T	124	7,476	XDM	302	0944M
CDRX251544T-5	127	7,476	XDM	373	0944M
CDRX25164T	124	8,044	XDM	327	0956M
CDRX25224T	124	8,279	XDM	390	0950M
CDRX25224T-5	127	8,279	XDM	390	0950M
CDRX25244T	124	9,374	XDM	335	0960M
CDRX25244T-5	127	9,374	XDM	335	0960M
CDRX25764T	124	6,867	XDM	374	0954M
CDRX281564T	124	12,627	XDM	478	1046M
CDRX282524T	124	10,843	XDM	408	1038M
CDRX282524T-5	127	10,843	XDM	525	1048M
CDRX282544T	124	11,453	XDM	447	1054M
CDRX282544T-5	127	11,453	XDM	506	1054M
CDRX28264T	124	12,928	XDM	459	1056M

(1) Shipping weight (lbs.) is approximate.

Index

Catalog Number	Page Number	List Price	Disc. Sym.	Ship Wgt(1)	Type Code
CDRX28324T	124	12,683	XDM	438	1046M
CDRX28324T-5	127	12,683	XDM	495	1046M
CDRX28344T	124	13,666	XDM	518	1056M
CDRX28344T-5	127	13,666	XDM	518	1056M
CDRX322564T	124	16,071	XDM	741	1260M
CDRX32364T	124	17,567	XDM	766	1264M
CDRX32424T	124	16,271	XDM	593	1252M
CDRX32424T-5	127	16,271	XDM	745	1252M
CDRX32444T	124	18,100	XDM	720	1254M
CDRX32444T-5	127	18,100	XDM	720	1254M
CDRX32524T	125	20,384	XDM	648	1264M
CDRX32524T-5	127	20,384	XDM	766	1264M
CDRX32544T	125	20,753	XDM	782	1276M
CDRX32544T-5	127	20,753	XDM	782	1276M
CDRX36464T	124	21,114	XDM	908	A36062M
CDRX36644T	125	24,145	XDM	910	A36062M
CDRX36744T	125	26,324	XDM	965	A36070M
CDRX40144T	125	30,702	XDM	1326	A40064M
CDRXL050344	128	1,507	XDP	35	3513L
CDRXL050544	128	1,597	XDP	43	3520L
CDRXL050744	128	1,745	XDP	53	3528L
CDRXL05144	128	1,912	XDP	57	3532L
CDX1850	273	4,696	WFS	100	3532L
CDX1875	273	6,218	WFS	100	3532L
CDX2001	273	7,734	WFS	102	3532L
CDX7100	273	6,420	WFS	102	3532L
CDX7150	273	8,502	WFS	121	3532L
CDX7200	273	9,547	WFS	135	3532L
CEBM3546T	216	2,587	BE3	43	3522M
CEBM3554T	216	2,786	BE3	48	3526M
CEBM3558T	216	2,865	BE3	52	3528M
CEBM3558T-D	214	2,923	UH3	61	3528M
CEBM3611T	216	3,203	BE3	81	3632M
CEBM3611T-D	214	3,705	UH3	103	3628M
CEBM3615T	216	3,753	BE3	101	3642M
CEBM3615T-D	214	4,295	UH3	121	3642M
CEBM3615T-DI	219	3,753	BE3	123	3642M
CEBM3710T	216	6,881	BE3	149	3738M
CEBM3710T-D	214	6,056	UH3	141	3738M
CEBM3714T	216	7,504	BE3	183	3752M
CEBM3714T-D	214	7,402	UH3	165	3752M
CECP2276T	55	4,808	SDM	305	0954M
CECP2294T	55	5,509	SDM	307	0930M
CECP2332T	55	6,151	SDM	323	0960M
CECP2333T	55	5,256	SDM	297	0944M
CECP2333T-4	55	5,256	SDM	296	0944M
CECP2333T-5	55	5,256	SDM	296	0944M
CECP2334T	55	5,571	SDM	339	0960M
CECP2334T-4	55	5,571	SDM	336	0960M
CECP2334T-5	55	5,571	SDM	336	0960M
CECP3581T	55	1,727	SDM	67	0524M
CECP3581T-5	55	1,727	SDM	60	0518M
CECP3582T	55	1,903	SDM	75	0526M
CECP3584T	55	1,762	SDM	72	0530M
CECP3584T-5	55	1,762	SDM	72	0530M
CECP3587T	55	1,833	SDM	76	0534M
CECP3587T-5	55	1,833	SDM	76	–
CECP3660T	55	2,257	SDM	112	0628M
CECP3661T	55	2,366	SDM	114	0632M
CECP3661T-5	55	2,366	SDM	114	0628M
CECP3663T	55	2,741	SDM	121	0632M
CECP3664T	55	2,235	SDM	113	0642M
CECP3665T	55	2,403	SDM	130	0642M
CECP3665T-5	55	2,403	SDM	130	0642M
CECP3667T	55	2,212	SDM	99	0630M
CECP3764T	55	3,257	SDM	187	0738M
CECP3768T	55	3,298	SDM	226	0748M
CECP3769T	55	3,686	SDM	173	0732M
CECP3770T	55	3,144	SDM	170	0738M
CECP3770T-5	55	3,144	SDM	170	0738M
CECP3771T	55	3,901	SDM	203	0742M
CECP3774T	55	3,700	SDM	231	0748M
CECP3774T-5	55	3,700	SDM	231	0748M
CECP4100T	55	7,633	SDM	435	1046M
CECP4102T	55	10,034	SDM	460	1054M
CECP4103T	55	7,362	SDM	449	1056M
CECP4103T-4	55	7,362	SDM	440	1056M
CECP4103T-5	55	7,362	SDM	449	1056M
CECP4104T	55	8,497	SDM	478	1060M
CECP4104T-4	55	8,497	SDM	475	1060M
CECP4104T-5	55	8,497	SDM	475	1060M
CECP4106T	55	6,273	SDM	333	0944M
CECP4107T	55	7,652	SDM	396	1048M
CECP4108T	55	9,063	SDM	454	1048M
CECP4109T	56	12,183	SDM	571	1240M
CECP4110T	56	10,847	SDM	628	1254M
CECP4111T	55	10,808	SDM	626	1260M
CECP4114T	56	12,699	SDM	639	1252M
CECP4115T	56	12,482	SDM	656	1272M
CECP4117T	55	13,554	SDM	640	1264M
CECP4308T	56	16,493	SDM	908	A36062M
CECP4310T	56	17,464	SDM	874	A36056M
CECP4312T	56	19,248	SDM	908	A36062M
CECP4313T	56	19,783	SDM	899	A36068M
CECP4314T	56	17,287	SDM	880	A3658M
CECP4314T-4	56	16,631	SDM	961	A3658M
CECP4314T-5	56	16,631	SDM	961	A3658M
CECP4316T	56	19,660	SDM	905	A36070M
CECP4400T-4	56	25,036	SDM	1388	A40064M
CECP4402T-4	56	24,946	SDM	1327	A40060M
CECP4406T-4	56	34,673	SDM	2138	A4488M
CECP4407T-4	56	41,710	SDM	2455	A44120M
CECP4410T-4	56	30,072	SDM	1669	A44076M
CECP82276T-4	60	5,204	SD8	346	0954M
CECP82332T-4	60	6,709	SD8	362	0960M
CECP82333T-4	60	5,446	SD8	322	0944M
CECP82333T-5	61	5,446	SD8	309	0944M
CECP82334T-4	60	5,762	SD8	356	0964M
CECP82334T-5	61	5,762	SD8	357	0964M
CECP82394T-4	60	5,578	SD8	308	0934M
CECP83580-4	60	2,105	SD8	56	0516M
CECP83580T-4	60	1,709	SD8	63	0516M
CECP83581-4	60	2,267	SD8	56	0524M
CECP83581T-4	60	1,870	SD8	71	0524M
CECP83581T-5	61	1,870	SD8	71	0524M
CECP83582-4	60	2,397	SD8	56	0526M
CECP83582T-4	60	2,001	SD8	56	0526M
CECP83583T-4	60	1,830	SD8	71	0524M
CECP83584T-4	60	1,905	SD8	75	0530M
CECP83586T-4	60	2,007	SD8	80	0526M
CECP83587T-4	60	1,984	SD8	78	0534M
CECP83587T-5	61	1,984	SD8	80	0534M
CECP83660T-4	60	2,439	SD8	121	0632M
CECP83661T-4	60	2,584	SD8	120	0632M
CECP83661T-5	61	2,584	SD8	122	0632M
CECP83663T-4	60	2,964	SD8	136	0642M
CECP83664T-4	60	2,642	SD8	113	0642M
CECP83665T-4	60	2,598	SD8	131	0642M
CECP83665T-5	61	2,598	SD8	131	0642M
CECP83667T-4	60	2,296	SD8	99	0630M
CECP83764T-4	60	3,530	SD8	211	0736M
CECP83768T-4	60	3,612	SD8	226	0748M
CECP83769T-4	60	3,843	SD8	179	0732M
CECP83770T-4	60	3,291	SD8	178	0740M
CECP83770T-5	61	3,291	SD8	211	0740M
CECP83771T-4	60	4,079	SD8	225	0742M
CECP83774T-4	60	3,978	SD8	231	0748M
CECP83774T-5	61	3,978	SD8	231	0748M

(1) Shipping weight (lbs.) is approximate.

Index

Catalog Number	Page Number	List Price	Disc. Sym.	Ship Wgt(1)	Type Code
CECP84100T-4	60	8,114	SD8	420	1054M
CECP84102T-4	60	10,619	SD8	460	1056M
CECP84103T-4	60	8,087	SD8	430	1056M
CECP84103T-5	61	8,087	SD8	444	1056M
CECP84104T-4	60	9,261	SD8	465	1060M
CECP84104T-5	61	9,261	SD8	487	1060M
CECP84106T-4	60	6,327	SD8	328	0954M
CECP84107T-4	60	8,629	SD8	433	1048M
CECP84108T-4	60	10,052	SD8	470	1048M
CECP84109T-4	61	13,368	SD8	587	1256M
CECP84110T-4	61	12,004	SD8	600	1260M
CECP84110T-5	61	12,004	SD8	670	1260M
CECP84111T-4	60	11,960	SD8	660	1264M
CECP84114T-4	61	13,881	SD8	670	1266M
CECP84115T-4	61	13,816	SD8	683	1272M
CECP84115T-5	61	13,816	SD8	663	1272M
CECP84117T-4	60	15,124	SD8	640	1268M
CECP84308T-4	61	18,298	SD8	908	A36062M
CECP84310T-4	61	19,269	SD8	899	A36056M
CECP84312T-4	61	21,053	SD8	925	A36062M
CECP84313T-4	61	21,587	SD8	1007	A36068M
CECP84314T-4	61	19,091	SD8	906	A3658M
CECP84316T-4	61	21,465	SD8	1050	A36070M
CECR9154T	68	3,611	SDC	286	0948M
CECR9204T	68	4,142	SDC	325	0962M
CECR9254T	68	5,230	SDC	465	1072M
CECR9304T	68	5,955	SDC	465	1072M
CECR9404T	68	7,555	SDC	650	1264M
CECR9504T	68	8,939	SDC	700	1272M
CECR9604T	68	12,164	SDC	977	A36068M
CECR9754T	68	14,465	SDC	982	A3668M
CEDM3545	64	1,426	SDD	39	3516M
CEDM3546	64	1,578	SDD	38	3520M
CEDM3550	64	1,559	SDD	42	3520M
CEDM3554	64	1,707	SDD	42	3526M
CEDM3554T	64	1,723	SDD	41	3526M
CEDM3555	64	1,668	SDD	38	3526M
CEDM3556	64	1,764	SDD	45	3526M
CEDM3558	64	1,781	SDD	49	3528M
CEDM3558T	64	1,797	SDD	52	3528M
CEDM3559T	64	1,787	SDD	59	3532M
CEDM3611T	64	1,984	SDD	90	3632M
CEDM3613T	64	2,122	SDD	97	3630M
CEDM3615T	64	2,029	SDD	108	3642M
CEDM3704T	64	3,054	SDD	154	3738M
CEDM3708T	64	3,329	SDD	181	3752M
CEDM3709T	64	3,236	SDD	138	3728M
CEDM3710T	64	3,018	SDD	146	3738M
CEDM3711T	64	3,268	SDD	138	3730M
CEDM3714T	64	3,287	SDD	185	3752M
CEL11301	22	779	GO1	27	3418LC
CEL11303	22	812	GO1	24	3413LC
CEL11304	22	868	GO1	32	3424LC
CEL11307	22	1,024	GO1	39	3524LC
CEL11310	22	1,172	GO1	44	3528LC
CEM2276T-G	170	6,142	HV3	281	0954M
CEM2332T-G	170	6,822	HV3	322	0960M
CEM2333T	29	4,222	GE3	269	0944M
CEM2333T-5	30	4,222	GE3	263	0944M
CEM2333T-G	170	5,681	HV3	270	0944M
CEM2334T	29	5,564	GE3	298	0960M
CEM2334T-5	30	5,564	GE3	289	0960M
CEM2334T-G	170	6,610	HV3	295	0960M
CEM2394T	29	5,110	GE3	250	0930M
CEM2394T-G	170	6,086	HV3	239	0930M
CEM2506T	38	3,399	GO3	248	3950M
CEM2506T-G	174	3,647	HV3	248	3950M
CEM2511T	38	4,262	GO3	255	3954M
CEM2511T-G	174	4,640	HV3	255	3954M
CEM2513T	38	4,433	GO3	213	3948M
CEM2513T-G	174	4,836	HV3	251	3948M
CEM2514T	38	4,490	GO3	194	3928M
CEM2514T-G	174	4,904	HV3	185	3928M
CEM2515T	38	4,812	GO3	231	3948M
CEM2515T-G	174	5,273	HV3	250	3948M
CEM2516T	38	5,284	GO3	219	3938M
CEM2516T-G	174	7,002	HV3	233	3938M
CEM2524T	38	5,984	GO3	300	4038M
CEM2524T-G	174	6,226	HV3	300	4038M
CEM2528T	38	7,074	GO3	369	4056M
CEM2528T-G	174	7,479	HV3	369	4056M
CEM2531T	38	6,173	GO3	336	4050M
CEM2531T-G	174	7,746	HV3	314	4050M
CEM2532T	38	8,717	GO3	383	4072M
CEM2532T-G	174	8,976	HV3	383	4072M
CEM2534T	38	6,565	GO3	320	4040M
CEM2534T-G	174	6,895	HV3	320	4040M
CEM2535T	38	6,661	GO3	378	4060M
CEM2535T-G	174	8,429	HV3	340	4060M
CEM2536T	38	9,035	GO3	482	4084M
CEM2536T-G	174	9,342	HV3	482	4084M
CEM2538T	39	8,181	GO3	330	4046M
CEM2538T-G	174	8,752	HV3	328	4046M
CEM2539T	39	8,769	GO3	378	4064M
CEM2539T-G	174	9,035	HV3	392	4064M
CEM2542T	39	9,197	GO3	375	4058M
CEM2542T-G	175	9,526	HV3	392	4058M
CEM2543T	39	9,537	GO3	494	4256M
CEM2543T-G	175	9,920	HV3	497	4256M
CEM2546T	39	11,283	GO3	472	4250M
CEM2546T-G	175	11,927	HV3	489	4250M
CEM2547T	39	11,868	GO3	632	4278M
CEM2547T-G	175	12,772	HV3	565	4278M
CEM2549T	39	14,588	GO3	475	4254M
CEM2549T-G	175	15,899	HV3	472	4250M
CEM2550T	39	15,489	GO3	574	4266M
CEM2550T-4G	175	22,069	HV3	589	4272M
CEM2551T	39	14,217	GO3	457	4462M
CEM2551T-G	175	15,474	HV3	597	4462M
CEM2554T-4	39	19,282	GO3	590	4476M
CEM2555T	39	16,526	GO3	945	4484M
CEM2555T-4G	175	22,390	HV3	898	–
CEM2559T-4	39	19,872	GO3	787	4488M
CEM31104	38	789	GO3	24	3416M
CEM31107	38	840	GO3	20	3416M
CEM31108	38	865	GO3	31	3424M
CEM31112	38	947	GO3	35	3516M
CEM31115	38	1,018	GO3	37	3512M
CEM31115-G	174	1,317	HV3	37	3512M
CEM31155	38	1,153	GO3	43	3524M
CEM3116T	38	1,233	GO3	35	3520M
CEM3116T-G	174	1,597	HV3	34	3520M
CEM3120T	38	1,070	GO3	34	3518M
CEM3120T-G	174	1,410	HV3	34	3518M
CEM3154T	38	1,286	GO3	31	3522M
CEM3154T-G	174	1,657	HV3	38	3522M
CEM3155T-G	174	1,610	HV3	41	3524M
CEM3156T	38	1,260	GO3	41	3526M
CEM3156T-G	174	1,627	HV3	40	3524M
CEM3157T	38	1,373	GO3	41	3526M
CEM3157T-G	174	1,759	HV3	41	3526M
CEM3158T	38	1,260	GO3	46	3530M
CEM3158T-G	174	1,627	HV3	51	3530M
CEM3207T	38	1,520	GO3	68	3628M
CEM3207T-G	174	1,882	HV3	68	3628M
CEM3211T	38	1,531	GO3	71	3630M
CEM3211T-G	174	1,895	HV3	72	3630M
CEM3212T	38	1,426	GO3	64	3622M

(1) Shipping weight (lbs.) is approximate.

Index

Catalog Number	Page Number	List Price	Disc. Sym.	Ship Wgt(1)	Type Code
CEM3212T-G	174	1,773	HV3	63	3622M
CEM3215T	38	1,551	GO3	82	3636M
CEM3215T-G	174	1,918	HV3	82	3636M
CEM3218T	38	1,666	GO3	87	3640M
CEM3218T-G	174	2,050	HV3	84	3640M
CEM3219T	38	2,192	GO3	77	3632M
CEM3219T-G	174	2,654	HV3	77	3632M
CEM3305T	38	2,090	GO3	131	3734M
CEM3305T-G	174	2,384	HV3	131	3734M
CEM3309T	38	2,656	GO3	141	3744M
CEM3309T-G	174	3,036	HV3	141	3744M
CEM3311T	38	2,541	GO3	118	3734M
CEM3311T-G	174	2,905	HV3	130	3734M
CEM3312T	38	2,638	GO3	121	3728M
CEM3312T-G	174	3,015	HV3	121	3728M
CEM3313T	38	3,020	GO3	133	3742M
CEM3313T-G	174	3,455	HV3	148	3742M
CEM3314T	38	3,634	GO3	128	3734M
CEM3314T-G	174	4,161	HV3	131	3734M
CEM3538-BG	168	1,406	HV3	33	3514M
CEM3542-BG	168	1,451	HV3	37	3516M
CEM3545	28	1,102	GE3	33	3516M
CEM3545-G	170	1,494	HV3	32	3516M
CEM3546	28	1,261	GE3	36	3520M
CEM3546-5	29	1,261	GE3	38	3520M
CEM3546-8	29	1,261	GE3	38	3520M
CEM3546T	28	1,135	GE3	36	3520M
CEM3546T-5	29	1,135	GE3	37	3520M
CEM3546T-BG	168	1,494	HV3	38	3520M
CEM3546T-G	170	1,711	HV3	30	3520M
CEM3550	28	1,242	GE3	37	3520M
CEM3550T	28	1,258	GE3	40	3520M
CEM3550T-G	170	1,688	HV3	36	3520M
CEM3554-5	29	1,396	GE3	41	3526M
CEM3554T	28	1,255	GE3	42	3526M
CEM3554T-5	29	1,255	GE3	42	3526M
CEM3554T-BG	168	1,540	HV3	41	3526M
CEM3554T-G	170	1,866	HV3	42	3526M
CEM3555	28	1,355	GE3	46	3526M
CEM3555T	28	1,372	GE3	44	3526M
CEM3555T-G	170	1,820	HV3	46	3526M
CEM3556	28	1,439	GE3	41	3526M
CEM3556T	28	1,456	GE3	43	3526M
CEM3556T-G	170	1,915	HV3	43	3526M
CEM3558	28	1,474	GE3	46	3528M
CEM3558-5	29	1,474	GE3	45	3528M
CEM3558T	28	1,324	GE3	46	3528M
CEM3558T-5	29	1,324	GE3	47	3528M
CEM3558T-BG	168	1,584	HV3	45	3528M
CEM3558T-G	170	1,956	HV3	42	3530M
CEM3559	28	1,480	GE3	50	3532M
CEM3559T	28	1,497	GE3	52	3532M
CEM3559T-5	29	1,497	GE3	52	3532M
CEM3559T-G	170	2,277	HV3	53	3532M
CEM3581T	28	1,610	GE3	54	0518M
CEM3581T-5	29	1,610	GE3	54	0518M
CEM3583T	28	1,698	GE3	55	0520M
CEM3583T-5	29	1,698	GE3	54	0520M
CEM3584T	28	1,666	GE3	60	0526M
CEM3584T-5	29	1,666	GE3	63	0526M
CEM3586T	28	1,777	GE3	60	0526M
CEM3586T-5	29	1,777	GE3	60	0526M
CEM3587T	28	1,742	GE3	62	0528M
CEM3587T-5	29	1,742	GE3	61	0528M
CEM3607T	28	1,747	GE3	77	3632M
CEM3607T-G	170	2,263	HV3	76	3632M
CEM3610T	28	1,571	GE3	50	3532M
CEM3610T-5	29	1,571	GE3	58	3532M
CEM3610T-G	170	2,420	HV3	64	3540M
CEM3611T	28	1,406	GE3	75	3632M
CEM3611T-5	29	1,406	GE3	75	3632M
CEM3611T-BG	168	1,826	HV3	70	3632M
CEM3611T-G	170	2,075	HV3	74	3632M
CEM3613T	29	1,729	GE3	78	3630M
CEM3613T-5	30	1,729	GE3	78	3630M
CEM3613T-G	170	2,241	HV3	76	3630M
CEM3614T	28	1,826	GE3	97	3644M
CEM3614T-G	170	2,353	HV3	94	3644M
CEM3615T	29	1,449	GE3	93	3642M
CEM3615T-5	30	1,449	GE3	93	3642M
CEM3615T-BG	168	1,956	HV3	93	3642M
CEM3615T-G	170	2,129	HV3	92	3642M
CEM3616T	29	2,243	GE3	101	3646M
CEM3660T	28	1,968	GE3	90	0618M
CEM3660T-5	29	1,968	GE3	89	0618M
CEM3661T	28	2,019	GE3	104	0632M
CEM3661T-5	29	2,019	GE3	102	0632M
CEM3663T	29	2,384	GE3	99	0628M
CEM3663T-5	30	2,384	GE3	99	0628M
CEM3664T	28	2,200	GE3	115	0642M
CEM3665T	29	2,062	GE3	114	0642M
CEM3665T-5	30	2,062	GE3	113	0642M
CEM3704T	28	2,450	GE3	141	3738M
CEM3704T-G	170	3,073	HV3	135	3738M
CEM3708T	29	2,738	GE3	161	3752M
CEM3708T-G	170	3,404	HV3	154	0748M
CEM3709T	29	2,641	GE3	120	3728M
CEM3709T-G	170	3,292	HV3	133	3728M
CEM3710T	29	2,142	GE3	134	3738M
CEM3710T-5	30	2,142	GE3	129	3738M
CEM3710T-G	170	3,028	HV3	129	3738M
CEM3711T	29	2,674	GE3	121	3730M
CEM3711T-5	30	2,674	GE3	123	3728M
CEM3711T-G	170	3,330	HV3	118	3730M
CEM3713T	29	3,679	GE3	182	3752M
CEM3713T-5	30	3,679	GE3	169	3752M
CEM3714T	29	2,391	GE3	165	3752M
CEM3714T-5	30	2,391	GE3	165	3752M
CEM3714T-G	170	3,353	HV3	156	3752M
CEM3764T	28	2,860	GE3	173	0736M
CEM3768T	29	3,267	GE3	190	0746M
CEM3769T	29	2,893	GE3	155	0726M
CEM3769T-5	30	2,893	GE3	179	0724M
CEM3770T	29	2,799	GE3	170	0738M
CEM3770T-5	30	2,799	GE3	170	0738M
CEM3771T	29	3,336	GE3	182	0730M
CEM3771T-5	30	3,336	GE3	182	0730M
CEM3774T	29	3,101	GE3	195	0748M
CEM3774T-5	30	3,101	GE3	231	0748M
CEM4100T-G	170	9,070	HV3	369	1046M
CEM4102T-G	170	11,505	HV3	393	1054M
CEM4103T	29	7,296	GE3	430	1054M
CEM4103T-5	30	7,296	GE3	401	1056M
CEM4103T-G	170	8,648	HV3	400	1054M
CEM4104T	29	8,418	GE3	425	1056M
CEM4104T-5	30	8,418	GE3	449	1056M
CEM4104T-G	171	9,938	HV3	410	1056M
CEM4106T	29	5,515	GE3	265	0936M
CEM4106T-5	30	5,515	GE3	280	0936M
CEM4106T-G	170	6,552	HV3	271	0936M
CEM4107T	29	7,217	GE3	346	0944M
CEM4107T-G	170	8,558	HV3	323	1048M
CEM4108T	29	8,335	GE3	389	1048M
CEM4108T-G	171	9,844	HV3	336	1048M
CEM4109T	29	11,148	GE3	600	1058M
CEM4109T-G	171	13,083	HV3	532	1256M
CEM4110T	29	10,812	GE3	590	1254M
CEM4110T-G	171	12,696	HV3	596	1254M

(1) Shipping weight (lbs.) is approximate.

Index

Catalog Number	Page Number	List Price	Disc. Sym.	Ship Wgt(1)	Type Code
CEM4111T-G	170	13,022	HV3	507	1260M
CEM4114T	29	12,057	GE3	591	1252M
CEM4114T-G	171	14,156	HV3	584	1266M
CEM4115T	29	11,678	GE3	585	1272M
CEM4115T-G	171	13,692	HV3	648	1272M
CEM4117T-G	171	14,741	HV3	604	1264M
CEM4310T	29	16,472	GE3	830	A36056M
CEM4310T-G	171	19,294	HV3	900	A36056M
CEM4313T	29	18,900	GE3	905	A36068M
CEM4313T-G	171	22,087	HV3	966	A36068M
CEM4314T	29	16,286	GE3	915	A3658M
CEM4314T-G	171	19,078	HV3	907	A3658M
CEM4316T	29	18,772	GE3	907	A36070M
CEM4316T-G	171	21,939	HV3	956	A36070M
CEM4400T	29	23,327	GE3	1360	A40064M
CEM4400T-G	171	29,877	HV3	1214	A40064M
CENCP83580T-4	60	1,633	SD8	61	0520M
CENCP83581T-4	60	1,776	SD8	64	0524M
CENM3546	28	1,261	GE3	38	3520M
CESSWDM23933T	91	10,283	WDS	293	3956M
CESSWDM23933T-5	92	10,283	WDS	281	3956M
CESSWDM23934T	91	11,925	WDS	299	3960M
CESSWDM23994T	91	10,448	WDS	293	3952M
CESSWDM3545	91	2,323	WDS	39	3520M
CESSWDM3545-H	91	2,323	WDS	38	3520M
CESSWDM3546	91	2,314	WDS	41	3524M
CESSWDM3546-5	92	2,314	WDS	46	3524M
CESSWDM3546-H	91	2,314	WDS	41	3524M
CESSWDM3546T	91	2,348	WDS	52	3524M
CESSWDM3546T-5	92	2,348	WDS	51	3524M
CESSWDM3550	91	2,337	WDS	56	3532M
CESSWDM3550-5	92	2,337	WDS	50	3532M
CESSWDM3550-H	91	2,337	WDS	50	3532M
CESSWDM3550T	91	2,356	WDS	60	3532M
CESSWDM3554	91	2,358	WDS	41	3526M
CESSWDM3554-H	91	2,358	WDS	45	3528M
CESSWDM3554T	91	2,393	WDS	55	3528M
CESSWDM3554T-5	92	2,393	WDS	56	3528M
CESSWDM3555T	91	2,855	WDS	60	3532M
CESSWDM3558	91	2,841	WDS	45	3528M
CESSWDM3558-H	91	2,841	WDS	45	3528M
CESSWDM3558T	91	2,875	WDS	45	3528M
CESSWDM3558T-5	92	2,875	WDS	45	3528M
CESSWDM3559T	91	3,440	WDS	74	3546M
CESSWDM3559T-5	92	3,440	WDS	73	3546M
CESSWDM3610T	91	3,674	WDS	90	3624M
CESSWDM3611T	91	3,361	WDS	102	3636M
CESSWDM3611T-5	92	3,361	WDS	92	3636M
CESSWDM3613T	91	3,909	WDS	106	3636M
CESSWDM3613T-5	92	3,909	WDS	106	3636M
CESSWDM3615T	91	3,782	WDS	112	3646M
CESSWDM3615T-5	92	3,782	WDS	112	3646M
CESSWDM3709T	91	4,588	WDS	166	3734M
CESSWDM3709T-5	92	4,588	WDS	129	3734M
CESSWDM3710T	91	4,731	WDS	137	3740M
CESSWDM3710T-5	92	4,731	WDS	139	3738M
CESSWDM3711T	91	5,119	WDS	184	3744M
CESSWDM3711T-5	92	5,119	WDS	154	3744M
CESSWDM3713T	91	7,682	WDS	187	3756M
CESSWDM3714T	91	5,218	WDS	190	3756M
CESSWDM3714T-5	92	5,218	WDS	185	3754M
CESSWDM41906T	91	11,993	WDS	312	3960M
CESSWDNM3555-H	91	3,114	WDS	61	3532M
CESSWDNM3555T-5	92	2,855	WDS	61	3546M
CESSWDNM3556-H	91	2,620	WDS	64	3544M
CESSWDNM3558-5	92	2,841	WDS	63	3546M
CESSWDNM3610T-5	92	3,674	WDS	96	3646M
CESSWDNM3611T-5	92	3,361	WDS	101	3646M
CESWDM3546	94	1,894	WDP	40	3524M

Catalog Number	Page Number	List Price	Disc. Sym.	Ship Wgt(1)	Type Code
CESWDM3546-5	95	1,894	WDP	39	3524M
CESWDM3546T	94	1,853	WDP	39	3524M
CESWDM3546T-5	95	1,853	WDP	39	3524M
CESWDM3554	94	1,933	WDP	50	3534M
CESWDM3554-5	95	1,933	WDP	47	3534M
CESWDM3554T	94	1,984	WDP	50	3534M
CESWDM3554T-5	95	1,984	WDP	47	3534M
CESWDM3555T	94	2,350	WDP	52	3532M
CESWDM3558	94	2,287	WDP	45	3528M
CESWDM3558T	94	2,435	WDP	56	3536M
CESWDM3559T	94	2,892	WDP	62	3546M
CESWDM3611T	94	2,979	WDP	79	3632M
CESWDM3613T	94	3,667	WDP	88	3636M
CESWDM3615T	94	3,466	WDP	92	3642M
CESWDM3709T	94	4,629	WDP	134	3734M
CESWDM3710T	94	4,265	WDP	135	3740M
CESWDM3711T	94	5,131	WDP	154	3744M
CESWDM3714T	94	4,853	WDP	165	3752M
CESWDNM3558-5	95	2,287	WDP	56	3538M
CEUHM3546	212	1,107	UH3	38	3520M
CEUHM3546T	212	1,121	UH3	39	3520M
CEUHM3554	212	1,169	UH3	41	3526M
CEUHM3554T	212	1,184	UH3	45	3526M
CEUHM3558	212	1,291	UH3	45	3528M
CEUHM3558T	212	1,304	UH3	50	3528M
CEUHM3611T	212	1,525	UH3	73	3632M
CEUHM3615T	212	1,675	UH3	94	3642M
CEWDBM3538	104, 221	3,435	WDW	42	3516M
CEWDBM3542	104, 221	3,712	WDW	42	3516M
CEWDBM3546	104, 221	3,810	WDW	50	3524M
CEWDBM3546T	104, 221	3,736	WDW	51	3524M
CEWDBM3554T	104, 221	4,146	WDW	61	3534M
CEWDBM3558T	104, 221	4,219	WDW	60	3528M
CEWDBM3611T	104, 221	5,105	WDW	93	3632M
CEWDBM3615T	104, 221	6,167	WDW	110	3642M
CEWDM2280T	109	9,335	WDW	256	0940M
CEWDM22976T	100	6,358	WDW	280	3954M
CEWDM23932T	100	7,227	WDW	289	3956M
CEWDM23933T	100	8,517	WDW	256	3942M
CEWDM23933T-5	102	8,517	WDW	258	3942M
CEWDM23934T	100	9,877	WDW	283	3952M
CEWDM23934T-5	102	9,877	WDW	289	3952M
CEWDM2395T	109	14,772	WDW	455	1060M
CEWDM23994T	100	8,653	WDW	188	3752M
CEWDM2401T	109	10,040	WDW	320	0960M
CEWDM2402T	109	11,387	WDW	391	1046M
CEWDM3545	99	1,711	WDW	33	3516M
CEWDM3545T	99	1,675	WDW	35	3516M
CEWDM3546	99	1,719	WDW	41	3524M
CEWDM3546-5	102	1,719	WDW	39	3524M
CEWDM3546-H	99	1,719	WDW	39	3524M
CEWDM3546T	99	1,754	WDW	37	3524M
CEWDM3546T-5	102	1,754	WDW	38	3524M
CEWDM3550	99	1,759	WDW	46	3528M
CEWDM3550-H	99	1,759	WDW	48	3528M
CEWDM3550T	99	1,797	WDW	48	3528M
CEWDM3554	99	1,798	WDW	50	3534M
CEWDM3554-H	99	1,798	WDW	56	3534M
CEWDM3554T	99	1,836	WDW	48	3534M
CEWDM3554T-5	102	1,836	WDW	46	3534M
CEWDM3555	99	1,902	WDW	35	3526M
CEWDM3555-H	99	1,902	WDW	41	3526M
CEWDM3555T	99	1,940	WDW	45	3526M
CEWDM3556	99	1,930	WDW	43	3526M
CEWDM3556-H	99	1,930	WDW	41	3526M
CEWDM3556T	99	1,981	WDW	41	3526M
CEWDM3558	99	1,961	WDW	48	3530M
CEWDM3558-H	99	1,961	WDW	48	3530M
CEWDM3558T	99	2,024	WDW	46	3528M

(1) Shipping weight (lbs.) is approximate.

Index

Catalog Number	Page Number	List Price	Disc. Sym.	Ship Wgt(1)	Type Code
CEWDM3558T-5	102	2,024	WDW	46	3528M
CEWDM3559T	100	2,389	WDW	60	3532M
CEWDM3559T-5	102	2,389	WDW	52	3532M
CEWDM3607T	99	2,139	WDW	72	3632M
CEWDM3610T	100	2,253	WDW	57	3532M
CEWDM3611T	100	2,658	WDW	78	3632M
CEWDM3611T-5	102	2,658	WDW	77	3632M
CEWDM3613T	100	3,162	WDW	80	3630M
CEWDM3613T-5	102	3,162	WDW	70	3630M
CEWDM3614T	99	2,373	WDW	93	3644M
CEWDM3615T	100	3,012	WDW	96	3642M
CEWDM3615T-5	102	3,012	WDW	94	3642M
CEWDM3616T	100	3,758	WDW	101	3646M
CEWDM3617T	99	3,089	WDW	65	3628M
CEWDM3618T	99	3,595	WDW	101	3646M
CEWDM3702T	99	5,054	WDW	111	3744M
CEWDM3704T	100	3,127	WDW	136	3738M
CEWDM3705T	100	5,758	WDW	111	3744M
CEWDM3708T	100	3,703	WDW	185	3752M
CEWDM3709T	100	4,454	WDW	143	3728M
CEWDM3709T-5	102	4,454	WDW	143	3738M
CEWDM3710T	100	3,810	WDW	151	3738M
CEWDM3710T-5	102	3,810	WDW	130	3738M
CEWDM3711T	100	4,902	WDW	122	3730M
CEWDM3711T-5	102	4,902	WDW	122	3728M
CEWDM3713T	100	6,160	WDW	174	3752M
CEWDM3714T	100	4,331	WDW	165	3752M
CEWDM3714T-5	102	4,331	WDW	165	3752M
CEWDM4100T	109	8,635	WDW	447	1054M
CEWDM4102T	109	11,275	WDW	429	1056M
CEWDM4103T	109	8,062	WDW	437	1054M
CEWDM4104T	109	9,183	WDW	437	1056M
CEWDM4107T	109	8,357	WDW	307	0944M
CEWDM4108T	109	9,908	WDW	299	0950M
CEWDM4109T	109	13,330	WDW	470	1058M
CEWDM4110T	109	11,816	WDW	578	1254M
CEWDM4111T	109	11,920	WDW	605	1260M
CEWDM4112T	109	16,859	WDW	606	1256M
CEWDM4114T	109	13,898	WDW	575	1252M
CEWDM4115T	109	13,615	WDW	700	1272M
CEWDM4116T	109	20,687	WDW	606	1256M
CEWDM4117T	109	14,942	WDW	640	1264M
CEWDM41906T	100	9,931	WDW	274	3940M
CEWDM4308T	109	19,187	WDW	908	A36062M
CEWDM4310T	109	20,493	WDW	999	A36056M
CEWDM4312T	109	20,333	WDW	908	A36062M
CEWDM4313T	109	21,953	WDW	1005	A36068M
CEWDM4314T	109	19,426	WDW	961	A3658M
CEWDM4316T	109	20,980	WDW	965	A36070M
CEWDM4338T	109	21,919	WDW	813	A36050M
CEWDM4348T	109	24,963	WDW	875	A36062M
CEWDM4403T	109	27,590	WDW	1322	A40064M
CEWDM4404T	109	33,142	WDW	1322	A40064M
CEWDM4419T	109	44,327	WDW	1815	A44072M
CEWDM4458T	109	33,533	WDW	1216	A40060M
CEWDM4468T	109	35,764	WDW	1216	A40060M
CEWDNM3545	99	1,615	WDW	35	3516M
CEWDNM3545-H	99	1,615	WDW	35	3516M
CEWDNM3558T	99	1,976	WDW	54	3538M
CFDL3504M	195	1,144	FD1	28	3421L
CFDL3507M	195	1,329	FD1	39	3432LC
CFDL3510M	195	1,500	FD1	47	3524L
CFDL3514M	195	1,686	FD1	51	3532LC
CFDL3516TM	195	2,137	FD1	53	3535LC
CFM3036A	187	932	HV3	25	3418M
CFM3046A	187	1,011	HV3	33	3428M
CFM3136A	187	965	HV3	28	3516M
CFM3146A	187	1,042	HV3	33	3520M
CFM3156A	187	1,189	HV3	38	3522M
CFM3166A	187	1,293	HV3	48	3534M
CFSWDL3503	81	2,289	WDF	33	3516L
CFSWDL3504	81	2,453	WDF	41	3524L
CFSWDL3506	81	2,534	WDF	33	3516L
CFSWDL3507	81	2,683	WDF	47	3532L
CFSWDL3509	81	2,705	WDF	41	3524L
CFSWDL3510	81	2,885	WDF	63	3540L
CFSWDM22976T-E	83	11,494	WDF	255	3954M
CFSWDM23932T-E	83	13,067	WDF	290	3964M
CFSWDM23933T-5E	83	11,488	WDF	281	3956M
CFSWDM23933T-E	83	11,488	WDF	281	3956M
CFSWDM23934T-E	83	13,140	WDF	290	3960M
CFSWDM23994T-E	83	11,653	WDF	260	3952M
CFSWDM3537-5E	83	2,733	WDF	35	3516M
CFSWDM3537-E	82	2,691	WDF	35	3516M
CFSWDM3538-5E	83	2,772	WDF	35	3516M
CFSWDM3538-E	82	2,731	WDF	38	3516M
CFSWDM3538-E-G	86	3,156	WDF	38	–
CFSWDM3539-E	82	3,281	WDF	37	3522M
CFSWDM3541-E	82	2,781	WDF	41	3520M
CFSWDM3542-5E	83	2,865	WDF	41	3522M
CFSWDM3542-E	82	2,824	WDF	37	3522M
CFSWDM3542-E-G	86	3,249	WDF	37	–
CFSWDM3543-E	82	3,372	WDF	45	3530M
CFSWDM3545-E	82	2,920	WDF	38	3520M
CFSWDM3546-5E	83	2,991	WDF	41	3522M
CFSWDM3546-E	82	2,950	WDF	37	3522M
CFSWDM3546-E-G	86	3,375	WDF	37	–
CFSWDM3546T-5E	83	3,014	WDF	43	3522M
CFSWDM3546T-E	82	2,973	WDF	37	3522M
CFSWDM3546T-E-G	86	3,398	WDF	37	–
CFSWDM3550-E	82	3,087	WDF	50	3532M
CFSWDM3550T-E	82	3,112	WDF	50	3532M
CFSWDM3554-5E	83	3,193	WDF	45	3528M
CFSWDM3554-E	82	3,152	WDF	45	3528M
CFSWDM3554T-5E	83	3,278	WDF	45	3528M
CFSWDM3554T-E	82	3,236	WDF	48	3528M
CFSWDM3555-E	82	3,644	WDF	50	3532M
CFSWDM3555T-E	82	3,667	WDF	50	3532M
CFSWDM3556-E	82	3,487	WDF	45	3534M
CFSWDM3558-5E	83	3,642	WDF	45	3528M
CFSWDM3558-E	82	3,642	WDF	45	3528M
CFSWDM3558T-5E	83	3,752	WDF	45	3528M
CFSWDM3558T-E	82	3,710	WDF	45	3528M
CFSWDM3559-E	82	4,136	WDF	61	3546M
CFSWDM3559-E-G	86	4,561	WDF	61	–
CFSWDM3559T-5E	83	4,363	WDF	61	3546M
CFSWDM3559T-E	82	4,322	WDF	61	3546M
CFSWDM3607T-E	82	3,865	WDF	90	3640M
CFSWDM3611T-5E	83	4,561	WDF	86	3636M
CFSWDM3611T-E	82	4,454	WDF	83	3636M
CFSWDM3613T-5E	83	4,822	WDF	84	3634M
CFSWDM3613T-E	83	4,716	WDF	84	3634M
CFSWDM3614T-E	82	4,290	WDF	101	3646M
CFSWDM3615T-5E	83	4,857	WDF	101	3646M
CFSWDM3615T-E	83	4,751	WDF	101	3646M
CFSWDM3615T-E-G	86	5,176	WDF	101	–
CFSWDM3704T-E	82	5,653	WDF	158	3748M
CFSWDM3708T-E	83	6,695	WDF	179	3756M
CFSWDM3709T-5E	83	5,916	WDF	131	3734M
CFSWDM3709T-E	83	5,916	WDF	129	3734M
CFSWDM3710T-5E	83	6,039	WDF	139	3740M
CFSWDM3710T-E	83	6,039	WDF	136	3740M
CFSWDM3710T-E-G	86	6,464	WDF	136	–
CFSWDM3711T-5E	83	6,708	WDF	154	3744M
CFSWDM3711T-E	83	6,708	WDF	149	3744M
CFSWDM3711T-E-G	86	7,133	WDF	149	–
CFSWDM3713T-E	83	10,061	WDF	188	3756M
CFSWDM3714T-5E	83	7,109	WDF	187	3756M

(1) Shipping weight (lbs.) is approximate.

Index

Catalog Number	Page Number	List Price	Disc. Sym.	Ship Wgt(1)	Type Code
CFSWDM3714T-E	83	7,109	WDF	187	3756M
CFSWDM3714T-E-G	86	7,534	WDF	187	–
CFSWDM41900T	83	14,716	WDF	488	4072M
CFSWDM41902T	83	18,817	WDF	493	4072M
CFSWDM41903T	83	16,802	WDF	471	4068M
CFSWDM41904T	83	19,323	WDF	485	4074M
CFSWDM41906T-E	83	13,208	WDF	295	3960M
CFSWDM41907T	83	16,897	WDF	431	4056M
CFSWDM41908T	83	19,432	WDF	445	4068M
CFSWDNM3554-E	82	3,048	WDF	59	3540M
CFSWDNM3554-E-G	86	3,473	WDF	59	–
CFSWDNM3554T-E	82	3,132	WDF	59	3540M
CFSWDNM3554T-E-G	86	3,557	WDF	59	–
CFSWDNM3555-E	82	3,487	WDF	61	3546M
CFSWDNM3555T-E	82	3,563	WDF	61	3546M
CFSWDNM3556-E	82	3,382	WDF	64	3544M
CFSWDNM3558-E	82	3,538	WDF	59	3546M
CFSWDNM3558-E-G	86	3,963	WDF	59	–
CFSWDNM3558T-E	82	3,606	WDF	63	3546M
CFSWDNM3558T-E-G	86	4,031	WDF	63	–
CFSWDNM3610T-E	82	4,473	WDF	96	3646M
CFSWDNM3611T-E	82	4,320	WDF	101	3646M
CFSWDNM3611T-E-G	86	4,745	WDF	101	–
CHC144A	190	571	HV1	21	3411C
CHC164A	190	664	HV1	22	3411C
CHC244A	190	637	HV1	22	3414C
CHC264A	190	769	HV1	26	3416C
CHC3413A	202	657	FD1	22	3414C
CHC3416A	202	715	FD1	25	3418C
CHC3417A	202	894	FD1	26	3421C
CHC345A	190	721	HV1	27	3420C
CHC3504A	202	799	FD1	25	3420C
CHC3525A	202	1,026	FD1	40	3528C
CHC3526A	202	1,270	FD1	50	3535C
CHC365A	190	830	HV1	31	3428C
CHC445A	190	822	HV1	35	3428C
CHC545A	190	879	HV1	39	3528C
CHC565A	190	1,189	HV1	51	3535C
CHL3510A	202	865	FD1	47	3528LC
CHM164A	190	672	HV3	20	3411M
CHM264A	190	716	HV3	19	3414M
CHM344A	190	685	HV3	23	3416M
CHM345A	190	690	HV3	24	3416M
CHM364A	190	779	HV3	25	3418M
CHM365A	190	785	HV3	28	3418M
CHM465A	190	897	HV3	34	3428M
CHM545A	190	866	HV3	34	3428M
CHM565A	190	1,021	HV3	40	3524M
CJEWDM3545	105, 142	1,741	WDW	38	3520M
CJEWDM3550	105, 142	1,839	WDW	41	3526M
CJEWDM3555	105, 142	2,040	WDW	41	3526M
CJEWDM3559	105, 142	2,417	WDW	64	3540M
CJL1205A	139	547	PJ1	23	3416L
CJL1301A	139	818	PJ1	23	3414L
CJL1303A	139	566	PJ1	30	3420L
CJL1304A	139	925	PJ1	25	3418L
CJL1306A	139	723	PJ1	30	3424L
CJL1307A	139	1,060	PJ1	35	3520L
CJL1309A	139	741	PJ1	32	3428L
CJL1313A	139	1,028	PJ1	37	3432LC
CJL1317A	139	1,375	PJ1	45	3528L
CJL3501A	138	749	PJ1	23	3414L
CJL3504A	138	883	PJ1	28	3421L
CJL3507A	138	1,075	PJ1	35	3428LC
CJL3509A	138	1,088	PJ1	39	3524L
CJL3513A	138	1,195	PJ1	47	3528L
CJL3515A	138	1,405	PJ1	51	3535L
CJM3104	141	631	PJ3	22	3413M
CJM3107	141	578	PJ3	22	3413M
CJM3108	141	705	PJ3	24	3416M
CJM3111	141	660	PJ3	28	3416M
CJM3112	141	756	PJ3	27	3420M
CJM3115	141	738	PJ3	29	3420M
CJM3120	141	899	PJ3	31	3424M
CJM3155	141	1,069	PJ3	34	3430M
CJM3158	141	1,265	PJ3	41	3524M
CJM3538		782	PJ3	23	3416M
CJM3542		828	PJ3	25	3420M
CJWDM3463	105, 142	1,105	WDW	33	3514M
CL1408TM	22, 208	1,792	DPS	80	3634LC
CL1410TM	22, 208	2,160	DPS	88	3640LC
CL3403	19	644	GE1	20	3411L
CL3405	19	642	GE1	21	3413L
CL3501	19	672	GE1	23	3414L
CL3503	19	673	GE1	23	3413L
CL3504	19	785	GE1	28	3421L
CL3506	19	749	GE1	29	3424L
CL3507	19	937	GE1	34	3428LC
CL3509	19	866	GE1	36	3520L
CL3510	19	1,057	GE1	40	3524L
CL3513	19	1,121	GE1	46	3528L
CL3514	19	1,255	GE1	51	3532LC
CL3515	19	1,446	GE1	50	3535L
CL3515T	19	1,457	GE1	53	3535L
CL3516TM	19, 208	1,862	DPS	53	3535LC
CL3608TM	19, 208	2,625	DPS	92	3640LC
CL3612TM	19, 208	2,539	DPS	102	3646LC
CL3619TM	19, 208	2,422	DPS	81	3634LC
CL3709T	19	3,343	GE1	126	3735LC
CL3710T	19	3,384	GE1	127	3734LC
CL3711T	19	4,265	GE1	167	3744LC
CL3712T	19	4,316	GE1	171	3748LC
CM3534	28	552	GE3	21	3413M
CM3534-5	29	552	GE3	21	3413M
CM3537	28	645	GE3	20	3410M
CM3538	28	611	GE3	23	3416M
CM3538-5	29	611	GE3	23	3416M
CM3538-8	29	779	GE3	23	3416M
CM3539	28	1,008	GE3	23	3418M
CM3541	28	705	GE3	22	3413M
CM3542	28	649	GE3	26	3420M
CM3542-5	29	649	GE3	26	3420M
CM3543	28	1,028	GE3	23	3428M
CMTG100XPYIV	286	4,912	R3B	6	–
CMTG50XPYIV	286	4,912	R3B	6	–
CNDM3538	64	1,030	SDD	34	3512M
CNDM3542	64	1,070	SDD	37	3514M
CNEDM3546	64	1,578	SDD	41	3524M
CNEDM3546T	64	1,594	SDD	42	3524M
CNEDM3554T	64	1,723	SDD	48	3534M
CNM3454/35	28	863	GE3	31	3512M
CNM3457	28	634	GE3	21	3410M
CNM3531	28	1,097	GE3	31	3516M
CNM3538/35	28	883	GE3	28	3512M
CNM3539	28	1,077	GE3	40	3524M
CNM3542	28	792	GE3	31	3514M
CPX14146T	121	2,607	XSM	80	0518M
CPX141546T	121	2,648	XSM	62	0526M
CPX14246T	121	2,715	XSM	120	0528M
CPX18326T	121	3,614	XSM	127	0618M
CPX18346T	121	2,893	XSM	127	0632M
CPX18526T	121	4,237	XSM	150	0640M
CPX18546T	121	3,435	XSM	125	0642M
CPX21126T	121	5,129	XSM	174	0730M
CPX21146T	121	5,992	XSM	252	0750M
CPX21366T	121	4,859	XSM	221	0736M
CPX21566T	121	5,393	XSM	245	0748M
CPX21726T	121	4,887	XSM	171	0732M

(1) Shipping weight (lbs.) is approximate.

Index

Catalog Number	Page Number	List Price	Disc. Sym.	Ship Wgt(1)	Type Code
CPX21746T	121	4,355	XSM	228	0738M
CPX251526T	121	5,800	XSM	349	0934M
CPX251546T	121	6,796	XSM	373	0944M
CPX25166T	121	7,397	XSM	400	0956M
CPX25226T	121	7,930	XSM	390	0950M
CPX25246T	121	8,803	XSM	336	0960M
CPX25766T	121	6,152	XSM	374	0954M
CPX281566T	121	11,922	XSM	478	1046M
CPX282526T	121	10,226	XSM	445	1038M
CPX282546T	121	10,680	XSM	506	1054M
CPX28266T	121	12,240	XSM	475	1056M
CPX28326T	121	12,455	XSM	495	1046M
CPX28346T	121	13,020	XSM	461	1056M
CPX322566T	121	15,304	XSM	619	1260M
CPX32366T	121	16,885	XSM	647	1264M
CPX32426T	121	15,515	XSM	593	1252M
CPX32446T	121	17,450	XSM	605	1254M
CPX32526T	121	19,865	XSM	648	1264M
CPX32546T	121	20,256	XSM	790	1276M
CPX36466T	121	19,569	XSM	908	A36062M
CPX36566T	121	22,087	XSM	908	A36062M
CPX36626T	122	22,551	XSM	999	A36056M
CPX36646T	122	22,656	XSM	910	A36062M
CPX36726T	122	23,519	XSM	1005	A36068M
CPX36746T	122	24,921	XSM	965	A36070M
CPX40146T	122	28,942	XSM	1326	A40064M
CPX40666T	122	27,934	XSM	1322	A40064M
CPX40766T	122	28,932	XSM	1375	A40072M
CPX441246T	122	34,937	XSM	1669	A44076M
CPX441546T	122	39,044	XSM	1826	A4488M
CPX44166T	122	34,364	XSM	1800	A44062M
CPX44246T	122	54,024	XSM	2676	A44120M
CPX442546T	122	64,829	XSM	3027	A44160M
CSSWDM3457	91	1,736	WDS	33	3512M
CSSWDM3534	91	1,826	WDS	33	3512M
CSSWDM3537	91	2,050	WDS	36	3512M
CSSWDM3537-H	91	2,050	WDS	37	3516M
CSSWDM3538	91	2,200	WDS	37	3512M
CSSWDM3538-5	92	2,200	WDS	37	3512M
CSSWDM3538-H	91	2,200	WDS	33	3516M
CSSWDM3539-H	91	2,373	WDS	37	3524M
CSSWDM3541	91	2,119	WDS	43	3518M
CSSWDM3541-H	91	2,119	WDS	34	3520M
CSSWDM3542	91	2,277	WDS	42	3518M
CSSWDM3542-5	92	2,277	WDS	41	3518M
CSSWDM3542-H	91	2,277	WDS	34	3518M
CSSWDM3543-H	91	2,575	WDS	51	3524M
CSWDM3537	94	1,204	WDP	29	3512M
CSWDM3537-5	95	1,204	WDP	37	3512M
CSWDM3538	94	1,177	WDP	27	3512M
CSWDM3538-5	95	1,177	WDP	33	3512M
CSWDM3539	94	1,647	WDP	38	3522M
CSWDM3541	94	1,263	WDP	36	3518M
CSWDM3541-5	95	1,263	WDP	39	3518M
CSWDM3542	94	1,359	WDP	30	3514M
CSWDM3542-5	95	1,359	WDP	30	3514M
CSWDM3543	94	1,988	WDP	47	3530M
CTM1760T	182	5,689	HV3	210	0748M
CTM1761T	182	7,214	HV3	290	0940M
CTM1762T	182	8,716	HV3	299	0944M
CTM1763T	182	10,140	HV3	342	1040M
CTM1764T	182	11,640	HV3	333	1050M
CTM1765T	182	15,281	HV3	619	1262M
CTM1766T	182	18,029	HV3	657	1272M
CTM1767T	182	26,111	HV3	836	A36052M
CTM2276T	181	3,335	HV3	179	0756M
CTM2332T	181	3,712	HV3	275	0946M
CTM2333T	181	4,071	HV3	236	0756M
CTM2334T	181	4,538	HV3	245	0760M
CTM3665T	181	1,803	HV3	100	0634M
CTM3768T	181	2,733	HV3	206	0736M
CTM3770T	181	2,401	HV3	164	0730M
CTM3774T	181	3,064	HV3	170	0736M
CTM4103T	181	5,502	HV3	343	0956M
CTM4104T	181	6,603	HV3	363	0964M
CTM4110T	181	8,783	HV3	529	1248M
CUHL3518	212	807	UH1	37	3520L
CUHL3519	212	983	UH1	44	3524L
CUHM3538	212	692	UH3	27	3512M
CUHM3542	212	731	UH3	31	3514M
CWDL3504	97	1,072	WDW	35	3520L
CWDL3507	97	1,248	WDW	36	3520L
CWDL3509	97	1,169	WDW	37	3520L
CWDL3510	97	1,434	WDW	41	3524L
CWDL3513	97	1,444	WDW	41	3524L
CWDL3514	97	1,717	WDW	50	3532LC
CWDM3534	99	891	WDW	33	3512M
CWDM3537	99	995	WDW	29	3512M
CWDM3537-H	99	995	WDW	37	3512M
CWDM3538	99	1,077	WDW	28	3512M
CWDM3538-5	102	1,077	WDW	26	3512M
CWDM3538-H	99	1,077	WDW	33	3512M
CWDM3539	99	1,360	WDW	37	3522M
CWDM3539-H	99	1,360	WDW	37	3522M
CWDM3541	99	1,042	WDW	35	3518M
CWDM3541-H	99	1,042	WDW	34	3518M
CWDM3542	99	1,167	WDW	29	3514M
CWDM3542-5	102	1,167	WDW	35	3514M
CWDM3542-H	99	1,167	WDW	30	3514M
CWDM3543	99	1,642	WDW	46	3530M
CWDM3543-H	99	1,642	WDW	45	3530M
CWDM3561TP	103	2,458	WDW	59	3540M
CWDM3561TP-5	103	2,458	WDW	59	3540M
CXL050342A	112	1,362	XP1	29	3414L
CXL050342A-50	120	1,568	XP1	35	3421L
CXL050522A	112	1,195	XP1	30	3420L
CXL050542A	112	1,363	XP1	36	3424L
CXL050542A-50	120	1,569	XP1	43	3428L
CXL050742A	112	1,522	XP1	48	3528L
CXL050742A-50	120	1,750	XP1	53	3528L
CXL05122A	112	1,357	XP1	50	3524L
CXL05142-50	120	1,988	XP1	73	3546L
CXL05142A	112	1,727	XP1	48	3528L
CXL141522T	112	2,126	XP1	42	3530L
CXL14222T	112	2,430	XP1	73	3540L
CXL181542	112	3,450	XP1	93	3634L
CXL18242T	112	3,560	XP1	93	3634L
CXL18322T	113	3,601	XP1	91	3634L
CXL21342	113	5,525	XP1	161	3740L
CXL21542	113	7,033	XP1	111	3726LC
CXM050342	116	1,230	XPM	37	3512M
CXM050522A	116	1,396	XPM	27	3410M
CXM050542	116	1,276	XPM	33	3514M
CXM050542-57	120	1,469	XPM	35	3420M
CXM050542A	116	1,276	XPM	30	3416M
CXM050722A	116	1,451	XPM	29	3413M
CXM050742	116	1,456	XPM	45	3516M
CXM050742-57	120	1,675	XPM	42	3428M
CXM050742A	116	1,456	XPM	35	3420M
CXM05122	116	2,294	XPM	41	3516M
CXM05142	116	2,462	XPM	50	3520M
CXM05142-57	120	2,832	XPM	45	3432M
CXM051542	116	2,498	XPM	50	3526M
CXM05242	116	2,561	XPM	59	3540M
CXM14142T	116	2,475	XPM	50	3520M
CXM141522T	116	2,434	XPM	47	3520M
CXM141542T	116	2,511	XPM	50	3526M
CXM14222T	116	2,826	XPM	55	3526M

(1) Shipping weight (lbs.) is approximate.

Index

Catalog Number	Page Number	List Price	Disc. Sym.	Ship Wgt(1)	Type Code
CXM14242T	116	2,574	XPM	58	3540M
CXM18322T	116	3,804	XPM	80	3622M
CXM18342T	116	3,148	XPM	102	3632M
CXM18522T	116	4,370	XPM	93	3630M
CXM18542T	116	3,641	XPM	118	3646M
CXM21122T	116	5,223	XPM	165	3750M
CXM21142T	116	6,009	XPM	189	3752M
CXM21722T	116	5,004	XPM	149	3728M
CXM21742T	116	4,520	XPM	163	3738M
CXM251522T	116	6,322	XPM	341	0934M
CXM251542T	116	7,227	XPM	374	0944M
CXM25222T	116	7,810	XPM	390	0950M
CXM25242T	116	9,053	XPM	335	0960M
CXM282542T	116	11,064	XPM	506	1054M
CXM28342T	116	13,191	XPM	535	1060M
CXM32442T	116	17,465	XPM	720	1254M
CXT3012T	47	1,223	XTM	53	0516M
CXT3012T-5	48	1,223	XTM	53	0516M
CXT3014T	47	1,201	XTM	58	0524M
CXT3014T-5	48	1,201	XTM	58	0524M
CXT30152T	47	1,296	XTM	58	0524M
CXT30152T-5	48	1,296	XTM	58	0524M
CXT30154T	47	1,362	XTM	63	0530M
CXT30154T-5	48	1,362	XTM	63	0530M
CXT30156T	47	1,565	XTM	99	0630M
CXT30156T-5	48	1,565	XTM	99	0630M
CXT3016T	47	1,338	XTM	56	0526M
CXT3016T-5	48	1,338	XTM	56	0526M
CXT3022T	47	1,358	XTM	64	0532M
CXT3022T-5	48	1,358	XTM	64	0532M
CXT3024T	47	1,388	XTM	65	0534M
CXT3024T-5	48	1,388	XTM	65	0534M
CXT3026T	47	1,743	XTM	113	0642M
CXT3026T-5	48	1,743	XTM	115	0640M
CXT3032T	47	1,576	XTM	99	0628M
CXT3032T-140	47	1,530	XTM	64	0532M
CXT3032T-5	48	1,576	XTM	99	0628M
CXT3034T	47	1,526	XTM	105	0632M
CXT3034T-5	48	1,526	XTM	105	0632M
CXT3036T	47	2,069	XTM	194	0738M
CXT3036T-5	48	2,069	XTM	211	0736M
CXT3052T	47	1,782	XTM	115	0632M
CXT3052T-5	48	1,782	XTM	105	0632M
CXT3054T	47	1,677	XTM	115	0642M
CXT3054T-5	48	1,677	XTM	115	0642M
CXT3056T	47	2,611	XTM	203	0744M
CXT3056T-5	48	2,611	XTM	226	0748M
CXT3072T	47	2,410	XTM	171	0732M
CXT3072T-180	47	2,103	XTM	123	0642M
CXT3072T-5	48	2,410	XTM	170	0726M
CXT3074T	47	2,348	XTM	203	0744M
CXT3074T-5	48	2,348	XTM	231	0748M
CXT3076T	47	3,948	XTM	303	0954M
CXT3076T-5	48	3,948	XTM	302	0954M
CXT31002TS	48	26,502	XTM	1327	A40060M
CXT31002TS-5	49	26,502	XTM	1327	A40060M
CXT31004T-4	48	25,843	XTM	1375	A40072M
CXT31004T-5	49	25,843	XTM	1375	A40072M
CXT3102T	47	2,786	XTM	198	0738M
CXT3102T-5	48	2,786	XTM	198	0738M
CXT3104T	47	2,769	XTM	231	0748M
CXT3104T-5	48	2,769	XTM	196	0750M
CXT3106T	47	4,762	XTM	322	0960M
CXT3106T-5	48	4,762	XTM	322	0960M
CXT31254T-4	48	33,219	XTM	1669	A44076M
CXT31254T-5	49	33,219	XTM	1669	A44076M
CXT31504T-4	48	38,215	XTM	1826	A4488M
CXT31504T-5	49	38,215	XTM	1826	A4488M
CXT3152T	47	3,974	XTM	253	0930M
CXT3152T-210	47	3,415	XTM	225	0750M
CXT3152T-5	48	3,974	XTM	239	0934M
CXT3154T	47	3,979	XTM	240	0944M
CXT3154T-5	48	3,979	XTM	286	0948M
CXT3156T	47	6,766	XTM	437	1046M
CXT3156T-5	48	6,766	XTM	391	1046M
CXT32004T-4	48	46,591	XTM	2676	A44120M
CXT32004T-5	49	46,590	XTM	2676	A44120M
CXT3202T	47	4,874	XTM	229	0936M
CXT3202T-5	48	4,874	XTM	229	0936M
CXT3204T	47	4,736	XTM	322	0960M
CXT3204T-5	48	4,736	XTM	322	0960M
CXT3206T	47	8,086	XTM	437	1054M
CXT3206T-5	48	8,086	XTM	455	1062M
CXT32504T-4	48	58,476	XTM	2888	A44144M
CXT32504T-5	49	58,476	XTM	3027	A44160M
CXT3252T-250	47	5,503	XTM	299	0944M
CXT3252TS	47	6,213	XTM	396	1048M
CXT3252TS-5	48	6,213	XTM	396	1048M
CXT3254T	47	5,880	XTM	437	1056M
CXT3254T-5	48	5,880	XTM	437	1056M
CXT3256T	47	9,281	XTM	605	1260M
CXT3256T-5	48	9,281	XTM	605	1260M
CXT33004T-4	48	68,342	XTM	3027	A44160M
CXT33004T-5	49	68,342	XTM	3027	A44160M
CXT3302TS	47	7,154	XTM	444	1048M
CXT3302TS-5	48	7,154	XTM	396	1048M
CXT3304T	47	6,933	XTM	460	1056M
CXT3304T-5	48	6,933	XTM	460	1060M
CXT3306T	47	10,603	XTM	630	1264M
CXT3306T-5	48	10,603	XTM	640	1264M
CXT3402TS	48	9,311	XTM	587	1240M
CXT3402TS-5	48	9,311	XTM	528	1240M
CXT3404T	48	8,978	XTM	600	1254M
CXT3404T-5	48	8,978	XTM	600	1260M
CXT3406T	48	14,731	XTM	908	A36062M
CXT3406T-5	48	14,731	XTM	908	A36062M
CXT3502TS	48	11,461	XTM	635	1252M
CXT3502TS-5	48	11,461	XTM	575	1252M
CXT3504T	48	11,083	XTM	700	1272M
CXT3504T-5	48	11,083	XTM	700	1272M
CXT3506T	48	17,200	XTM	908	A36062M
CXT3506T-5	48	17,200	XTM	996	A3668M
CXT3602TS	48	17,130	XTM	999	A36056M
CXT3602TS-5	48	17,130	XTM	999	A36056M
CXT3604T	48	15,937	XTM	947	A3658M
CXT3604T-5	48	15,937	XTM	952	A3658M
CXT3752TS	48	19,849	XTM	1005	A36068M
CXT3752TS-5	48	19,849	XTM	1005	A36068M
CXT3754T	48	18,700	XTM	965	A36070M
CXT3754T-5	48	18,700	XTM	965	A36070M
D1151	271	2,813	WFC	23	A36070M
D1152	271	2,890	WFC	29	A36070M
D1153	271	3,402	WFC	34	A36070M
D1154	271	3,911	WFC	62	A36070M
D1802R	274	14,534	R3B	86	–
D1803R	274	15,837	R3B	165	–
D1815R	274	14,061	R3B	169	–
D2003R	278	16,447	R3B	161	–
D2005P	281	14,306	RSV	180	–
D2005R	278	17,521	R3B	194	–
D2007P	281	16,667	RSV	218	–
D2007R	278	17,608	R3B	210	–
D2010P	281	16,976	RSV	260	–
D2010R	278	19,545	R3B	233	–
D2010R-2	274	23,383	R3B	346	–
D2015P	281	19,001	RSV	375	–
D2015R	278	21,745	R3B	346	–
D2015R-BV	276	25,195	R3B	345	–

(1) Shipping weight (lbs.) is approximate.

Index

Catalog Number	Page Number	List Price	Disc. Sym.	Ship Wgt[1]	Type Code
D2020P	281	20,019	RSV	430	–
D2020R	278	22,951	R3B	410	–
D2020R-BV	276	25,797	R3B	345	–
D2025P	281	24,669	RSV	575	–
D2025R	278	25,233	R3B	415	–
D2025R-BV	276	30,396	R3B	370	–
D2030P	281	24,669	RSV	595	–
D2030R	278	24,604	R3B	515	–
D2030R-BV	276	31,070	R3B	400	–
D2040P-BV	282	38,428	RSV	855	–
D2040R-BV	276	31,088	R3B	480	–
D2050P-BV	282	40,628	RSV	873	–
D2060P2-BV	282	49,730	RSV	980	–
D2075P2-BV	282	51,930	RSV	1015	–
D2301	271	2,813	WFC	41	–
D2302	271	2,890	WFC	29	–
D2303	271	3,402	WFC	34	–
D2304	271	3,911	WFC	62	–
D2305	271	6,651	WFC	84	–
D2505P	283	16,442	RSV	220	–
D2505R	275	19,622	R3B	251	–
D2507P	283	19,347	RSV	300	–
D2507R	275	23,490	R3B	359	–
D2510P	283	21,810	RSV	470	–
D2510R	275	26,413	R3B	379	–
D2515P	283	28,130	RSV	630	–
D2515R	275	31,862	R3B	560	–
D2520P	283	37,048	RSV	850	–
D2520R	275	33,206	R3B	640	–
D2525P	283	39,248	RSV	872	–
D2525R	275	38,598	R3B	805	–
D5003R	278	17,842	R3B	197	–
D5005P	281	14,306	RSV	162	–
D5005R	278	17,842	R3B	194	–
D5007P	281	16,667	RSV	235	–
D5007R	278	17,974	R3B	197	–
D501	316	1,207	SVC	5	–
D50100P	281	59,708	RSV	1100	–
D50100P2-BV	282	62,809	RSV	1145	–
D50100R-BV	276	46,323	R3B	890	–
D50100RS-BV	276	51,155	R3B	1210	–
D5010P	281	16,976	RSV	255	–
D5010R	278	18,245	R3B	227	–
D5010RS-BV	276	28,093	R3B	345	–
D50125P	281	68,671	RSV	1445	–
D50125P2-BV	282	65,167	RSV	1170	–
D50125R-BV	276	46,323	R3B	997	–
D50125RS-BV	276	52,709	R3B	1290	–
D50125UR-BV	276	46,323	R3B	945	–
D50150P	281	85,619	RSV	1785	–
D50150P2-BV	282	79,396	RSV	1519	–
D50150RE-BV	277	48,187	R3B	1197	–
D50150RS-BV	277	66,207	R3B	1640	–
D50150URE-BV	277	48,946	R3B	1197	–
D5015P	281	19,001	RSV	375	–
D5015R	278	21,933	R3B	320	–
D5015R-BV	276	25,195	R3B	375	–
D5015RS-BV	276	32,040	R3B	345	–
D502	316	1,207	SVC	2	–
D50200P	281	92,574	RSV	2095	–
D50200P2-BV	282	93,026	RSV	1810	–
D50200RR-BV	277	53,934	R3B	1475	–
D50200RS-BV	277	70,082	R3B	1905	–
D5020P	281	20,019	RSV	430	–
D5020R	278	24,871	R3B	372	–
D5020R-BV	276	25,797	R3B	390	–
D5020RS-BV	276	32,789	R3B	370	–
D50250P	281	110,088	RSV	2540	–
D50250P2-BV	282	97,471	RSV	2216	–
D50250RR-BV	277	65,105	R3B	1891	–
D50250RS-BV	277	100,295	R3B	2310	–
D5025P	281	24,669	RSV	490	–
D5025R	278	23,761	R3B	394	–
D5025R-BV	276	30,396	R3B	436	–
D5025RS-BV	276	34,002	R3B	472	–
D50300P2-BV	282	112,176	RSV	2595	–
D50300R-BV	277	67,824	R3B	2190	–
D50300RS-BV	277	116,711	R3B	2815	–
D5030P	281	24,669	RSV	590	–
D5030R	278	25,027	R3B	520	–
D5030R-BV	276	31,070	R3B	445	–
D5030RS-BV	276	36,440	R3B	535	–
D50400P2-BV	282	139,361	RSV	3220	–
D50400R-BV	277	116,711	R3B	3040	–
D50400RS-BV	277	119,536	R3B	3040	–
D5040P	281	33,017	RSV	784	–
D5040P-BV	282	38,428	RSV	830	–
D5040R	278	27,476	R3B	605	–
D5040R-BV	276	33,332	R3B	501	–
D5040RS-BV	276	39,524	R3B	570	–
D50500P2-BV	282	171,637	RSV	3916	–
D50500R-BV	277	148,727	R3B	3480	–
D5050P	281	33,017	RSV	822	–
D5050P-BV	282	40,628	RSV	885	–
D5050R	278	31,873	R3B	766	–
D5050R-BV	276	36,041	R3B	520	–
D5050RS-BV	276	41,867	R3B	660	–
D5060P	281	44,271	RSV	790	–
D5060P-BV	282	49,730	RSV	880	–
D5060R	278	33,481	R3B	860	–
D5060R-BV	276	38,880	R3B	610	–
D5060RS-BV	276	44,216	R3B	860	–
D5075P	281	44,271	RSV	905	–
D5075P-BV	282	51,930	RSV	960	–
D5075R-BV	276	45,548	R3B	825	–
D5075RS-1BV	276	49,646	R3B	1210	–
D51100RB-1BV	276	53,306	R3B	1475	–
D51125RR-BV	276	55,553	R3B	1475	–
D51200R-1BV	277	97,301	R3B	1850	–
D51250R-BV	277	114,176	R3B	2735	–
D51300R-BV	277	118,145	R3B	3015	–
D5130R-BV	276	33,894	R3B	480	–
D51400R-BV	277	148,191	R3B	3830	–
D5140R-BV	276	41,419	R3B	640	–
D51500R-BV	277	168,302	R3B	4560	–
D5150R-BV	276	42,368	R3B	695	–
D5160R-BV	276	45,548	R3B	805	–
D5175R-1BV	276	46,323	R3B	1125	–
D5505P	283	16,442	RSV	214	–
D5505R	275	21,794	R3B	340	–
D5507P	283	19,347	RSV	310	–
D5507R	275	23,490	R3B	360	–
D5510P	283	21,810	RSV	250	–
D5510R	275	26,413	R3B	405	–
D5515P	283	28,130	RSV	630	–
D5515R	275	31,862	R3B	540	–
D5520P	283	37,048	RSV	840	–
D5520R	275	33,206	R3B	640	–
D5525P	283	39,248	RSV	875	–
D5525R	275	38,598	R3B	815	–
D5530R	275	40,463	R3B	895	–
D5540R	275	47,418	R3B	1120	–
D5550R	275	50,175	R3B	1270	–
DA1	319	97	SVC	1	–
DC10	319	3,210	SVC	60	–
DC12	319	3,638	SVC	62	–
DC12-3	319	3,638	SVC	57	–
DC14-3	319	3,654	SVC	73	–

[1] Shipping weight (lbs.) is approximate.

Index

Catalog Number	Page Number	List Price	Disc. Sym.	Ship Wgt(1)	Type Code
DC7	319	3,210	SVC	60	–
DC8	319	3,210	SVC	62	–
DEL3733TM	202	5,111	FD1	162	3750LC
DEL3737TM	202	6,243	FD1	160	3750LC
DM3538	64	984	SDD	27	3420M
DM3542	64	1,028	SDD	30	3428M
DMG2305	284	16,772	RSV	220	–
DMG2307	284	17,105	RSV	245	–
DMG2310	284	17,569	RSV	250	–
DMG2315	284	25,303	RSV	250	–
DMG2320	284	28,014	RSV	595	–
DMG2325	284	30,289	RSV	820	–
DMG2333	284	38,409	RSV	840	–
DMG2340	284	42,103	RSV	910	–
DRX14124T	123	2,300	XDM	41	3516M
DRX14124T-5	126	2,300	XDM	38	3516M
DRX14144T	123	2,465	XDM	50	3520M
DRX14144T-5	126	2,465	XDM	50	3520M
DRX141524T	123	2,432	XDM	47	3520M
DRX141544T	123	2,503	XDM	50	3526M
DRX14164T	123	3,102	XDM	49	3526M
DRX14224T	123	2,842	XDM	55	3526M
DRX14224T-5	126	2,842	XDM	55	3526M
DRX14244T	123	2,567	XDM	59	3528M
DRX14244T-5	126	2,567	XDM	59	3528M
DRX181564T	123	3,712	XDM	149	0630M
DRX18264T	123	4,043	XDM	152	0642M
DRX18324T	123	3,417	XDM	150	0618M
DRX18324T-5	126	3,417	XDM	127	0618M
DRX18344T	123	2,735	XDM	111	0632M
DRX18344T-5	126	2,735	XDM	111	0632M
DRX18524T	123	4,006	XDM	122	0640M
DRX18524T-5	126	4,006	XDM	122	0640M
DRX18544T	123	3,247	XDM	152	0642M
DRX18544T-5	126	3,247	XDM	123	0642M
DRX21124T	123	4,849	XDM	174	0730M
DRX21124T-5	126	4,849	XDM	235	0742M
DRX21144T	123	5,666	XDM	252	0750M
DRX21144T-5	126	5,666	XDM	252	0750M
DRX21364T	123	4,568	XDM	200	0736M
DRX21564T	123	5,070	XDM	245	0748M
DRX21724T	123	4,621	XDM	184	0726M
DRX21724T-5	126	4,621	XDM	184	0726M
DRX21744T	123	4,118	XDM	193	0738M
DRX21744T-5	126	4,118	XDM	228	0738M
DRX251524T	123	5,483	XDM	349	0934M
DRX251524T-5	126	5,483	XDM	316	0934M
DRX251544T	123	6,425	XDM	373	0944M
DRX251544T-5	126	6,425	XDM	303	0944M
DRX25164T	123	6,993	XDM	400	0956M
DRX25224T	123	7,229	XDM	317	0950M
DRX25224T-5	126	7,229	XDM	316	0950M
DRX25244T	123	8,324	XDM	336	0960M
DRX25244T-5	126	8,324	XDM	335	0960M
DRX25764T	123	5,816	XDM	374	0954M
DRX281564T	123	11,271	XDM	478	1046M
DRX282524T	123	9,488	XDM	445	1038M
DRX282524T-5	126	9,488	XDM	525	1048M
DRX282544T	123	10,097	XDM	448	1054M
DRX282544T-5	126	10,097	XDM	506	1054M
DRX28264T	123	11,573	XDM	475	1056M
DRX28324T	123	11,327	XDM	495	1046M
DRX28324T-5	126	11,327	XDM	495	1046M
DRX28344T	123	12,310	XDM	461	1056M
DRX28344T-5	126	12,310	XDM	518	1056M
DRX322564T	123	14,469	XDM	741	1260M
DRX32364T	123	15,964	XDM	766	1264M
DRX32424T	123	14,669	XDM	745	1252M
DRX32424T-5	126	14,669	XDM	593	1252M
DRX32444T	123	16,498	XDM	720	1254M
DRX32444T-5	126	16,498	XDM	601	1254M
DRX32524T	123	18,782	XDM	766	1264M
DRX32524T-5	126	18,782	XDM	649	1264M
DRX32544T	123	19,151	XDM	790	1276M
DRX32544T-5	126	19,151	XDM	782	1276M
DRX36464T	123	19,213	XDM	908	A36062M
DRX36564T	123	21,685	XDM	908	A36062M
DRX36624T	124	22,102	XDM	999	A36056M
DRX36644T	124	22,245	XDM	910	A36062M
DRX36644T-5	126	22,245	XDM	965	A3670M
DRX36724T	124	23,050	XDM	1005	A36068M
DRX36744T	124	24,423	XDM	966	A36070M
DRX36744T-5	126	24,423	XDM	965	A36070M
DRX40144T	124	28,364	XDM	1326	A40064M
DRX40144T-5	126	28,364	XDM	1326	A40064M
DRX40664T	124	27,376	XDM	1322	A40064M
DRX40764T	124	28,354	XDM	1322	A40064M
DRX441244T	124	34,239	XDM	1669	A44076M
DRX441264T	124	36,818	XDM	1913	A44076M
DRX441544T	124	38,264	XDM	1826	A4488M
DRX44164T	124	33,678	XDM	1800	A44062M
DRX44244T	124	52,944	XDM	2676	A44120M
EBM2333T	216	11,214	BE3	337	0944M
EBM2334T	216	14,550	BE3	398	0960M
EBM2334TY	218	14,550	BE3	263	0960M
EBM2353TY	218	10,227	BE3	286	0944M
EBM2354TY	218	13,019	BE3	328	0960M
EBM2513T	220	9,118	BO3	252	3948M
EBM3116T	220	2,274	BO3	49	3524M
EBM3154T	220	2,524	BO3	48	3522M
EBM3157T	220	2,880	BO3	51	3526M
EBM3211T	220	3,534	BO3	83	3630M
EBM3218T	220	4,367	BO3	104	3640M
EBM3218T-DI	219	4,367	BO3	122	3640M
EBM3248T	220	3,753	BO3	104	3640M
EBM3311T	220	5,488	BO3	149	3734M
EBM3313T	220	6,883	BO3	159	3742M
EBM3546	216	2,594	BE3	44	3520M
EBM3546-S	215	2,197	UH3	51	3520M
EBM3546T	216	2,646	BE3	46	3520M
EBM3546T-S	215	2,213	UH3	51	3520M
EBM3554T	216	2,979	BE3	52	3526M
EBM3554T-S	215	2,401	UH3	54	3526M
EBM3554TY	218	2,722	BE3	48	3526M
EBM3554Y	218	2,722	BE3	48	3526M
EBM3556TY	218	2,765	BE3	48	3526M
EBM3558T	216	3,127	BE3	57	3528M
EBM3558T-D	214	2,766	UH3	61	3528M
EBM3558T-S	215	2,480	UH3	58	3528M
EBM3558TY	218	2,801	BE3	52	3528M
EBM3558Y	218	2,801	BE3	52	3528M
EBM3603Y	218	2,854	BE3	44	3520M
EBM3606Y	218	3,035	BE3	48	3526M
EBM3609Y	218	3,122	BE3	52	3528M
EBM3611T	216	3,944	BE3	89	3632M
EBM3611T-D	214	3,583	UH3	104	3628M
EBM3611T-S	215	2,924	UH3	83	3632M
EBM3611TY	218	3,081	BE3	77	3632M
EBM3614TY	218	3,330	BE3	104	3644M
EBM3615T	216	4,782	BE3	106	3642M
EBM3615T-D	214	4,332	UH3	117	3642M
EBM3615T-DI	219	5,141	BE3	125	3642M
EBM3615T-S	215	3,422	UH3	106	3642M
EBM3615TY	218	3,631	BE3	101	3642M
EBM3615TY-DI	219	3,904	BE3	125	3642M
EBM3635TY	218	3,130	BE3	100	3642M
EBM3703Y	218	4,851	BE3	77	3632M
EBM3704TY	218	6,685	BE3	154	3738M

(1) Shipping weight (lbs.) is approximate.

Index

Catalog Number	Page Number	List Price	Disc. Sym.	Ship Wgt(1)	Type Code
EBM3704TY-DI	219	7,188	BE3	140	3738M
EBM3707Y	218	5,828	BE3	100	3644M
EBM3707Y-DI	219	6,266	BE3	127	3644M
EBM3710T	216	6,307	BE3	158	3738M
EBM3710T-D	214	5,826	UH3	170	3738M
EBM3710TY	218	6,646	BE3	149	3736M
EBM3710TY-DI	219	7,145	BE3	157	3736M
EBM3714T	216	7,927	BE3	165	3752M
EBM3714T-D	214	7,170	UH3	165	3752M
EBM3714TY	218	7,268	BE3	183	3752M
EBM3714TY-DI	219	7,815	BE3	195	3752M
EBM3730TY	218	5,502	BE3	146	3736M
EBM3730TY-DI	219	5,915	BE3	157	3736M
EBM3734TY	218	6,936	BE3	187	3752M
EBM3734TY-DI	219	7,456	BE3	195	3752M
EBM4103T	216	18,380	BE3	516	1054M
EBM4103TY	218	18,380	BE3	448	1054M
EBM4104T	216	20,727	BE3	667	1056M
EBM4104TY	218	20,575	BE3	565	1056M
EBNM3546-D	214	2,398	UH3	51	3524M
EBNM3546T-D	214	2,398	UH3	51	3524M
EBNM3554T-D	214	2,590	UH3	62	3534M
ECC101M0H10FF4	166	3,676	EC1	123	–
ECC101M0H15FF4	166	5,559	EC1	168	–
ECC101M0H5DF4	166	2,388	EC1	64	–
ECC101M0H5EF4	166	2,463	EC1	68	–
ECC101M0H7EF4	166	3,257	EC1	92	–
ECC101M0H7FF4	166	3,487	EC1	105	–
ECC101M4H20FF4	166	6,608	EC1	218	–
ECP2276T	51	4,492	SDM	335	0954M
ECP2276T-4	51	4,492	SDM	337	0954M
ECP2276T-5	54	4,492	SDM	333	0954M
ECP2280T-4	51	6,892	SDM	327	0952M
ECP2294T	52	4,593	SDM	300	0930M
ECP2332T	52	5,836	SDM	348	0960M
ECP2332T-4	52	5,836	SDM	347	0960M
ECP2332T-5	54	5,836	SDM	347	0960M
ECP2333T	52	4,315	SDM	314	0944M
ECP2333T-4	52	4,315	SDM	294	0944M
ECP2333T-5	54	4,315	SDM	297	0944M
ECP2334T	52	4,627	SDM	334	0960M
ECP2334T-4	52	4,627	SDM	333	0960M
ECP2334T-5	54	4,627	SDM	325	0960M
ECP2394T-4	52	4,593	SDM	297	0934M
ECP2394T-5	54	4,593	SDM	239	0934M
ECP2395T-4	52	12,271	SDM	479	1060M
ECP2401T-4	51	7,881	SDM	347	0960M
ECP2402T-4	52	9,194	SDM	468	1046M
ECP3580T	51	1,493	SDM	59	0516M
ECP3580T-4	51	1,493	SDM	59	0516M
ECP3580T-5	54	1,493	SDM	61	0516M
ECP3581T	51	1,641	SDM	64	0524M
ECP3581T-4	51	1,641	SDM	61	0524M
ECP3581T-5	54	1,641	SDM	65	0524M
ECP3582T	51	1,812	SDM	68	0526M
ECP3582T-4	51	1,812	SDM	69	0526M
ECP3583T	51	1,698	SDM	67	0524M
ECP3583T-4	51	1,698	SDM	67	0524M
ECP3584T	51	1,671	SDM	69	0530M
ECP3584T-4	51	1,671	SDM	72	0530M
ECP3584T-5	54	1,671	SDM	71	0530M
ECP3586T	51	1,776	SDM	74	0532M
ECP3586T-4	51	1,776	SDM	74	0532M
ECP3587T	51	1,745	SDM	75	0534M
ECP3587T-4	51	1,745	SDM	73	0534M
ECP3587T-5	54	1,745	SDM	75	0534M
ECP3660T	51	2,100	SDM	104	0628M
ECP3660T-4	51	2,100	SDM	106	0628M
ECP3660T-5	54	2,100	SDM	107	0628M
ECP3661T	51	2,207	SDM	110	0632M
ECP3661T-4	51	2,207	SDM	112	0632M
ECP3661T-5	54	2,207	SDM	113	0632M
ECP3663T	51	2,584	SDM	114	0632M
ECP3663T-4	51	2,584	SDM	111	0634M
ECP3663T-5	54	2,584	SDM	111	0634M
ECP3664T	51	2,147	SDM	122	0642M
ECP3664T-4	51	2,147	SDM	120	0642M
ECP3665T	51	2,246	SDM	118	0642M
ECP3665T-4	51	2,246	SDM	119	0642M
ECP3665T-5	54	2,246	SDM	118	0642M
ECP3667T	51	2,120	SDM	108	0630M
ECP3667T-4	51	2,120	SDM	108	0630M
ECP3668T-4	51	3,167	SDM	110	0634M
ECP3687T-4	51	2,545	SDM	103	0628M
ECP3764T	51	3,098	SDM	185	0738M
ECP3764T-4	51	3,098	SDM	209	0736M
ECP3764T-5	54	3,098	SDM	211	0738M
ECP3768T	51	3,140	SDM	212	0748M
ECP3768T-4	51	3,140	SDM	227	0748M
ECP3768T-5	54	3,140	SDM	196	0748M
ECP3769T	51	3,372	SDM	169	0732M
ECP3769T-4	51	3,372	SDM	173	0732M
ECP3769T-5	54	3,372	SDM	169	0732M
ECP3770T	51	2,828	SDM	170	0738M
ECP3770T-4	51	2,828	SDM	170	0738M
ECP3770T-5	54	2,828	SDM	170	0738M
ECP3771T	52	3,590	SDM	203	0742M
ECP3771T-4	52	3,590	SDM	215	0742M
ECP3771T-5	54	3,590	SDM	182	0742M
ECP3772T-4	51	3,994	SDM	179	0732M
ECP3774T	52	3,386	SDM	231	0748M
ECP3774T-4	52	3,386	SDM	211	0748M
ECP3774T-5	54	3,386	SDM	231	0748M
ECP3775T-4	51	4,330	SDM	203	0744M
ECP4100T	52	6,691	SDM	449	1046M
ECP4100T-4	52	6,691	SDM	448	1046M
ECP4100T-5	54	6,691	SDM	446	1046M
ECP4102T	52	9,091	SDM	437	1054M
ECP4102T-4	52	9,091	SDM	437	1054M
ECP4102T-5	54	9,091	SDM	478	1062M
ECP4103T	52	6,055	SDM	431	1056M
ECP4103T-4	52	6,055	SDM	435	1056M
ECP4103T-5	54	6,055	SDM	424	1056M
ECP4104T	52	7,189	SDM	475	1056M
ECP4104T-4	52	7,189	SDM	470	1056M
ECP4104T-5	54	7,189	SDM	467	1060M
ECP4106T	52	5,357	SDM	324	0944M
ECP4106T-4	52	5,357	SDM	328	0944M
ECP4106T-5	54	5,357	SDM	310	0954M
ECP4107T	52	6,438	SDM	396	1048M
ECP4107T-4	52	6,438	SDM	410	1048M
ECP4108T	52	7,848	SDM	440	1048M
ECP4108T-4	52	7,848	SDM	424	1048M
ECP4109T	52	10,781	SDM	552	1240M
ECP4109T-4	52	10,781	SDM	566	1244M
ECP4110T	52	9,406	SDM	618	1254M
ECP4110T-4	52	9,406	SDM	626	1254M
ECP4110T-5	54	9,406	SDM	623	1260M
ECP4111T	52	9,500	SDM	604	1260M
ECP4111T-4	52	9,500	SDM	608	1260M
ECP4111T-5	54	9,500	SDM	612	1260M
ECP4112T-4	52	13,989	SDM	600	1256M
ECP4113T-4	52	18,472	SDM	813	A36050M
ECP4114T	52	11,298	SDM	619	1252M
ECP4114T-4	52	11,298	SDM	610	1252M
ECP4115T	52	11,040	SDM	641	1272M
ECP4115T-4	52	11,040	SDM	668	1272M
ECP4115T-5	54	11,040	SDM	652	1272M

(1) Shipping weight (lbs.) is approximate.

Index

Catalog Number	Page Number	List Price	Disc. Sym.	Ship Wgt(1)	Type Code
ECP4117T	52	12,246	SDM	621	1264M
ECP4117T-4	52	12,246	SDM	633	1264M
ECP4117T-5	54	12,246	SDM	630	1268M
ECP4124T-4	52	17,469	SDM	598	1256M
ECP4308T	52	14,967	SDM	918	A36062M
ECP4308T-4	52	14,967	SDM	889	A36062M
ECP4308T-5	54	15,262	SDM	910	A36062M
ECP4310T	52	15,938	SDM	929	A36056M
ECP4310T-4	52	15,938	SDM	882	A36056M
ECP4312T	52	17,722	SDM	928	A36062M
ECP4312T-4	52	17,722	SDM	920	A36062M
ECP4313T	52	18,257	SDM	1004	A36068M
ECP4313T-4	52	18,257	SDM	990	A36068M
ECP4313T-5	54	18,257	SDM	1005	A36068M
ECP4314T	52	15,761	SDM	933	A3658M
ECP4314T-4	52	15,761	SDM	941	A3658M
ECP4314T-5	54	15,761	SDM	936	A3658M
ECP4315T-4	52	21,240	SDM	813	A36062M
ECP4316T	52	18,134	SDM	958	A36070M
ECP4316T-4	52	18,134	SDM	962	A36070M
ECP4316T-5	54	18,134	SDM	966	A36070M
ECP4316TR-4	52	19,116	SDM	965	A36070M
ECP4400T-4	53	22,695	SDM	1296	A40072M
ECP4400T-5	54	22,695	SDM	1305	A40064M
ECP4400TR-4	53	23,818	SDM	1326	A40064M
ECP4400TS-4	53	22,695	SDM	1304	A40064M
ECP4402T	53	23,038	SDM	1283	A40060M
ECP4402T-4	53	23,038	SDM	1272	A40060M
ECP4403T	52	22,207	SDM	1281	A40064M
ECP4403T-4	52	22,207	SDM	1331	A40064M
ECP4403TR-4	52	23,329	SDM	1375	A40072M
ECP4404T	52	27,026	SDM	1275	A40064M
ECP4404T-4	52	27,026	SDM	1334	A40064M
ECP4404T-5	54	27,026	SDM	1322	A40064M
ECP4404TR-4	52	28,148	SDM	1334	A4072M
ECP4406T-4	53	31,432	SDM	2190	A4488M
ECP4406T-5	54	31,432	SDM	2175	A4488M
ECP4406TR-4	53	33,362	SDM	2190	A4488M
ECP4407T-4	53	37,812	SDM	2545	A44120M
ECP4407T-5	54	37,812	SDM	2570	A44120M
ECP4407TR-4	53	39,739	SDM	2621	A44120M
ECP4407TS-4	53	37,812	SDM	2573	A44120M
ECP4408T-4	53	47,983	SDM	2981	A44144M
ECP4408T-5	54	47,983	SDM	3027	A44160M
ECP4408TR-4	53	49,910	SDM	2995	A44144M
ECP4409T-4	53	29,726	SDM	1871	A44064M
ECP4409TR-4	53	31,656	SDM	1871	A44064M
ECP4410T-4	53	26,831	SDM	1950	A44076M
ECP4410T-5	54	26,831	SDM	2054	A44076M
ECP4410TR-4	53	28,761	SDM	1950	A44076M
ECP4411T-4	53	33,582	SDM	2146	A44090M
ECP4411T-5	54	33,582	SDM	1913	A44076M
ECP4411TR-4	53	35,512	SDM	2146	A44090M
ECP4412T	53	27,071	SDM	1957	A4468M
ECP4412T-4	53	27,071	SDM	1901	A4468M
ECP4413T-4	53	31,737	SDM	2017	A4478M
ECP44156T-4	53	37,862	SDM	2546	A44120M
ECP44156TR-4	53	39,791	SDM	2585	A44120M
ECP4416T-4	53	37,579	SDM	2436	A44104M
ECP4417T-4	52	26,174	SDM	1216	A40060M
ECP4418T-4	52	30,696	SDM	1216	A40060M
ECP4419T-4	52	37,898	SDM	1815	A44072M
ECP44206T-4	53	49,596	SDM	3104	A44160M
ECP44206TR-4	53	51,523	SDM	3091	A44160M
ECP4420T-4	53	44,236	SDM	1905	A44060M
ECP4421T-4	53	48,448	SDM	2330	A44104M
ECP4422T-4	53	55,666	SDM	3051	A44120M
ECP4423T-4	53	70,655	SDM	3179	A44144M
ECP44252T-4	53	57,466	SDM	2633	A44112M

Catalog Number	Page Number	List Price	Disc. Sym.	Ship Wgt(1)	Type Code
ECP44256T-4	53	69,188	SDM	3090	A44160M
ECP44256TR-4	53	71,115	SDM	3093	A44160M
ECP44302T-4	53	83,987	SDM	2789	A44128M
ECP44304T-4	53	66,134	SDM	3061	A44152M
ECP44304T-5	54	66,134	SDM	3150	A44160M
ECP44304TR-4	53	68,063	SDM	3048	A44152M
ECP44352T-4	53	87,854	SDM	2965	A44144M
ECP44402T-4	53	117,940	SDM	3700	A44208M
ECP49258T-4	53	85,552	SDM	3430	A44176M
ECP49306T-4	53	100,809	SDM	3125	A44208M
ECP49308T-4	53	91,261	SDM	4089	A44208M
ECP49354T-4	53	102,998	SDM	3543	A44176M
ECP49354T-5	54	102,998	SDM	3680	A44208M
ECP49404T-4	53	106,057	SDM	3682	A44208M
ECP49404T-5	54	106,057	SDM	3702	A44208M
ECP49454T-4	53	109,031	SDM	3680	A44208M
ECP502506-PP	53	52,434	ISD	3682	–
ECP503002-PP	53	51,123	ISD	3792	–
ECP503006-PP	53	61,525	ISD	4277	–
ECP503008-PP	53	72,641	ISD	4564	–
ECP503502-PP	53	56,605	ISD	4012	–
ECP503504-PP	53	53,604	ISD	3902	–
ECP503506-PP	53	66,656	ISD	4607	–
ECP503508-PP	53	80,076	ISD	5291	–
ECP504002-PP	53	62,199	ISD	4431	–
ECP504004-PP	53	58,901	ISD	4299	–
ECP504006-PP	53	73,399	ISD	5005	–
ECP504008-PP	53	85,950	ISD	5667	–
ECP504502-PP	53	68,711	ISD	4431	–
ECP504504-PP	53	65,068	ISD	4563	–
ECP504506-PP	53	77,821	ISD	5445	–
ECP504508-PP	53	89,115	ISD	5886	–
ECP505002-PP	53	75,156	ISD	4431	–
ECP505004-PP	53	72,615	ISD	4564	–
ECP505006-PP	53	80,796	ISD	5754	–
ECP505008-PP	53	94,612	ISD	5886	–
ECP506002-PP	54	80,316	ISD	4652	–
ECP506004-PP	54	76,057	ISD	5225	–
ECP506006-PP	54	85,320	ISD	5887	–
ECP506502-PP	54	89,551	ISD	4785	–
ECP506504-PP	54	82,445	ISD	5203	–
ECP506506-PP	54	90,097	ISD	5887	–
ECP507004-PP	54	87,556	ISD	5688	–
ECP507006-PP	54	95,053	ISD	5887	–
ECP507504-PP	54	92,459	ISD	5688	–
ECP508004-PP	54	96,342	ISD	5931	–
ECP509004-PP	54	100,195	ISD	6283	–
ECP62333TR-4	62	5,300	SD6	324	0944M
ECP62334TR-4	62	5,685	SD6	355	0964M
ECP63665T-4	62	2,468	SD6	128	0642M
ECP63770TR-4	62	3,533	SD6	195	0740M
ECP63774TR-4	62	4,104	SD6	231	0748M
ECP64103TR-4	62	7,350	SD6	461	1056M
ECP64104TR-4	62	8,529	SD6	487	1060M
ECP64110TR-4	62	11,314	SD6	600	1260M
ECP64115TR-4	62	13,131	SD6	687	1272M
ECP64314TR-4	62	17,730	SD6	936	A3658M
ECP64316TR-4	62	20,104	SD6	976	A36070M
ECP82276T-4	57	5,022	SD8	343	0954M
ECP82276T-5	58	5,269	SD8	348	0954M
ECP82332T-4	57	6,411	SD8	359	0960M
ECP82332T-5	59	6,411	SD8	357	0960M
ECP82333T-4	57	4,739	SD8	322	0944M
ECP82333T-5	59	4,739	SD8	318	0944M
ECP82334T-4	57	5,124	SD8	350	0964M
ECP82334T-5	59	5,124	SD8	361	0964M
ECP82394T-4	57	5,130	SD8	308	0934M
ECP82394T-5	59	5,130	SD8	305	0934M
ECP83580T-4	57	1,639	SD8	60	0514M

(1) Shipping weight (lbs.) is approximate.

Index

Catalog Number	Page Number	List Price	Disc. Sym.	Ship Wgt(1)	Type Code
ECP83580T-5	58	1,639	SD8	63	0516M
ECP83581T-4	57	1,800	SD8	69	0522M
ECP83581T-5	58	1,800	SD8	67	0524M
ECP83582T-4	57	1,930	SD8	69	0526M
ECP83582T-5	58	1,930	SD8	69	0526M
ECP83583T-4	57	1,760	SD8	69	0524M
ECP83583T-5	58	1,760	SD8	71	0524M
ECP83584T-4	57	1,831	SD8	73	0528M
ECP83584T-5	58	1,831	SD8	73	0530M
ECP83586T-4	57	1,932	SD8	78	0526M
ECP83586T-5	58	1,825	SD8	79	0526M
ECP83587T-4	57	1,913	SD8	78	0532M
ECP83587T-5	58	1,913	SD8	77	0534M
ECP83660T-4	57	2,303	SD8	116	0630M
ECP83660T-5	58	2,303	SD8	116	0632M
ECP83661T-4	57	2,422	SD8	116	0632M
ECP83661T-5	58	2,422	SD8	118	0632M
ECP83663T-4	57	2,837	SD8	132	0642M
ECP83663T-5	58	2,837	SD8	130	0642M
ECP83664T-4	57	2,416	SD8	130	0642M
ECP83664T-5	58	2,416	SD8	128	0642M
ECP83665T-4	57	2,468	SD8	127	0642M
ECP83665T-5	58	2,468	SD8	127	0642M
ECP83667T-4	57	2,223	SD8	114	0630M
ECP83667T-5	58	2,223	SD8	105	0630M
ECP83764T-4	57	3,368	SD8	165	0736M
ECP83764T-5	58	3,368	SD8	211	0736M
ECP83768T-4	57	3,482	SD8	193	0748M
ECP83768T-5	58	3,482	SD8	226	0748M
ECP83769T-4	57	3,703	SD8	179	0730M
ECP83769T-5	58	3,703	SD8	179	0732M
ECP83770T-4	57	3,109	SD8	199	0740M
ECP83770T-5	58	3,109	SD8	199	0740M
ECP83771T-4	57	3,942	SD8	225	0742M
ECP83771T-5	59	3,942	SD8	225	0742M
ECP83774T-4	57	3,681	SD8	231	0748M
ECP83774T-5	59	3,681	SD8	231	0748M
ECP84100T-4	57	7,406	SD8	447	1054M
ECP84100T-5	59	7,406	SD8	445	1054M
ECP84102T-4	57	9,981	SD8	442	1056M
ECP84102T-5	59	9,981	SD8	443	1056M
ECP84103T-4	57	6,646	SD8	441	1056M
ECP84103T-5	59	6,646	SD8	345	1056M
ECP84104T-4	57	7,826	SD8	545	1060M
ECP84104T-5	59	7,826	SD8	489	1060M
ECP84106T-4	57	5,882	SD8	328	0952M
ECP84106T-5	59	5,882	SD8	324	0954M
ECP84107T-4	57	7,191	SD8	360	1048M
ECP84107T-5	59	7,191	SD8	429	1048M
ECP84108T-4	57	8,614	SD8	442	1048M
ECP84108T-5	59	8,614	SD8	422	1048M
ECP84109T-4	57	11,785	SD8	626	1256M
ECP84109T-5	59	11,785	SD8	624	1256M
ECP84110T-4	57	10,420	SD8	629	1260M
ECP84110T-5	59	10,420	SD8	635	1260M
ECP84111T-4	57	10,519	SD8	638	1264M
ECP84111T-5	59	10,519	SD8	623	1264M
ECP84114T-4	57	12,293	SD8	623	1266M
ECP84114T-5	59	12,293	SD8	662	1266M
ECP84115T-4	57	12,233	SD8	679	1272M
ECP84115T-5	59	12,233	SD8	653	1272M
ECP84117T-4	57	13,689	SD8	637	1268M
ECP84117T-5	59	13,689	SD8	635	1268M
ECP84308T-4	57	16,771	SD8	927	A36062M
ECP84308T-5	59	16,771	SD8	922	A36062M
ECP84310T-4	58	17,743	SD8	905	A36056M
ECP84310T-5	59	17,743	SD8	932	A36056M
ECP84312T-4	57	19,527	SD8	928	A36062M
ECP84312T-5	59	19,527	SD8	924	A36062M

Catalog Number	Page Number	List Price	Disc. Sym.	Ship Wgt(1)	Type Code
ECP84313T-4	58	20,061	SD8	1045	A36068M
ECP84313T-5	59	20,061	SD8	998	A36068M
ECP84314T-4	58	17,565	SD8	913	A3658M
ECP84314T-5	59	17,565	SD8	937	A3658M
ECP84316T-4	58	19,939	SD8	971	A36070M
ECP84316T-5	59	19,939	SD8	985	A36070M
ECP84400T-4	58	25,217	SD8	1299	A40064M
ECP84400T-5	59	25,217	SD8	1304	A40064M
ECP84400TR-4	58	26,339	SD8	1326	A40064M
ECP84402T-4	58	24,113	SD8	1277	A40060M
ECP84402T-5	59	24,113	SD8	1287	A40060M
ECP84403T-4	58	23,134	SD8	1271	A40064M
ECP84403T-5	59	23,134	SD8	1275	A40064M
ECP84404T-4	58	28,021	SD8	1327	A40064M
ECP84404T-5	59	28,021	SD8	1283	A40064M
ECP84406T-4	58	33,827	SD8	2184	A4488M
ECP84406T-5	59	33,827	SD8	1886	A44078M
ECP84406TR-4	58	35,935	SD8	1826	A4488M
ECP84407T-4	58	40,698	SD8	2617	A44120M
ECP84407T-5	59	40,698	SD8	2606	A44120M
ECP84407TR-4	58	42,626	SD8	2608	A44120M
ECP84407TR-5	59	42,626	SD8	2618	A44120M
ECP84408T-4	58	51,952	SD8	2959	A44144M
ECP84408T-5	59	51,952	SD8	2932	A44144M
ECP84408TR-4	58	53,828	SD8	2995	A44144M
ECP84408TR-5	59	53,828	SD8	2732	A44144M
ECP84409T-4	58	30,822	SD8	1940	A44064M
ECP84409T-5	59	30,822	SD8	1885	A44062M
ECP84409TR-4	58	32,752	SD8	1599	A44064M
ECP84410T-4	58	28,604	SD8	2020	A44076M
ECP84410T-5	59	28,604	SD8	1915	A44062M
ECP84410TR-4	58	30,534	SD8	1669	A44076M
ECP84411T-4	58	34,984	SD8	2083	A44090M
ECP84411T-5	59	34,984	SD8	2000	A44076M
ECP84411TR-4	58	36,914	SD8	1874	A44090M
ECP84412T-4	58	28,200	SD8	1968	A4468M
ECP84412T-5	59	28,200	SD8	1799	A44056M
ECP84413T-4	58	32,406	SD8	2053	A4478M
ECP84413T-5	59	32,406	SD8	2062	A44078M
ECP844156T-4	58	38,885	SD8	2536	A44120M
ECP844156TR-4	58	40,811	SD8	2615	A44120M
ECP844156TR-5	59	40,811	SD8	2595	A44120M
ECP84416T-4	58	42,841	SD8	2433	A44104M
ECP84416T-5	59	42,841	SD8	2182	A44078M
ECP844206T-4	58	51,658	SD8	3109	A44160M
ECP844206TR-4	58	53,586	SD8	3108	A44160M
ECP844206TR-5	59	53,586	SD8	3100	A44160M
ECP844252T-4	58	69,026	SD8	2790	A44128M
ECP844252T-5	59	69,026	SD8	2784	A44128M
ECP844256T-4	58	72,505	SD8	3102	A44160M
ECP844256TR-4	58	76,579	SD8	3125	A44160M
ECP844256TR-5	59	76,579	SD8	3125	A44160M
ECP844302T-4	58	98,425	SD8	3700	–
ECP844304T-4	58	80,548	SD8	3700	–
ECP844304TR-4	58	83,770	SD8	3700	–
ECP844306T-4	58	103,636	SD8	3683	A44208M
ECP844306TR-4	58	106,613	SD8	3683	A44208M
ECP844306TR-5	59	87,297	SD8	3683	A44208M
ECP844352T-4	58	112,032	SD8	3700	–
ECP844354T-4	58	107,785	SD8	3700	–
ECP844354TR-4	58	110,180	SD8	3700	–
ECR582506-5PPN	67	43,998	ICR	3715	–
ECR582506-PPN	67	43,998	ICR	4806	–
ECR582508-PP	67	56,184	ICR	4806	–
ECR583004-5PPN	67	40,623	ICR	3560	–
ECR583004-PPN	67	40,623	ICR	4718	–
ECR583006-5PPN	67	51,626	ICR	4025	–
ECR583006-PPN	67	51,626	ICR	4806	–
ECR583008-PP	67	60,954	ICR	4806	–

(1) Shipping weight (lbs.) is approximate.

Index

Catalog Number	Page Number	List Price	Disc. Sym.	Ship Wgt[1]	Type Code
ECR583504-5PPN	67	44,980	ICR	3935	–
ECR583504-PPN	67	44,980	ICR	4718	–
ECR583506-5PPN	67	55,931	ICR	4025	–
ECR583506-PPN	67	55,931	ICR	4806	–
ECR583508-PP	67	67,192	ICR	4806	–
ECR584004-5PPN	67	49,424	ICR	3935	–
ECR584004-PPN	67	49,424	ICR	4718	–
ECR584006-5PPN	67	61,589	ICR	4025	–
ECR584006-PPN	67	61,589	ICR	4806	–
ECR584504-5PPN	67	56,368	ICR	4025	–
ECR584504-PPN	67	56,368	ICR	4718	–
ECR584506-5PPN	67	67,416	ICR	4820	–
ECR584506-PPN	67	67,416	ICR	4806	–
ECR584508-PP	67	77,200	ICR	5760	–
ECR585004-5PPN	67	57,707	ICR	4025	–
ECR585004-PPN	67	57,707	ICR	4718	–
ECR585006-5PPN	67	69,994	ICR	4820	–
ECR585006-PPN	67	69,994	ICR	4806	–
ECR586004-5PPN	67	65,888	ICR	4820	–
ECR586004-PPN	67	65,888	ICR	4718	–
ECR9054T	66	1,160	SDC	118	0640M
ECR9056T	66	2,002	SDC	226	0748M
ECR9074T	66	1,635	SDC	231	0748M
ECR9076T	66	3,100	SDC	320	0954M
ECR91004T-4	66	17,552	SDC	1390	A40076M
ECR91004TR-4	66	17,552	SDC	1390	A40076M
ECR91006TR-4	66	23,471	SDC	2029	A44084M
ECR91008TR-4	66	25,045	SDC	2129	A4490M
ECR9104T	66	2,004	SDC	240	0748M
ECR9106T	66	3,601	SDC	355	0962M
ECR91254T-4	66	22,166	SDC	1964	A44078M
ECR91254TR-4	66	22,166	SDC	1964	A44078M
ECR91256TR-4	66	26,974	SDC	1874	A44090M
ECR91258TR-4	66	32,408	SDC	2380	A44120M
ECR91504T-4	66	26,156	SDC	1996	A4488M
ECR91504TR-4	66	26,156	SDC	1996	A4488M
ECR91506TR-4	66	30,990	SDC	2459	A44112M
ECR91508TR-4	66	37,228	SDC	2648	A44160M
ECR9154T	66	2,774	SDC	286	0948M
ECR9156T	66	4,942	SDC	500	1068M
ECR92004T-4	67	31,679	SDC	2455	A44106M
ECR92004TR-4	67	31,679	SDC	2455	A44106M
ECR92006TR-4	67	37,738	SDC	3125	A44128M
ECR92008TR-4	67	46,839	SDC	3430	A44176M
ECR9204T	66	3,305	SDC	366	0962M
ECR9206T	66	5,949	SDC	535	1072M
ECR92504T-4	67	32,131	SDC	2694	A44128M
ECR92504TR-4	67	32,131	SDC	2694	A44128M
ECR92506TR-4	67	43,220	SDC	3225	A44160M
ECR92508TR-4	67	59,124	SDC	3390	A44208M
ECR9254T	66	4,119	SDC	380	1072M
ECR9256T	66	7,113	SDC	630	1272M
ECR93004T-4	67	45,024	SDC	2888	A44144M
ECR93004TR-4	67	45,024	SDC	2888	A44144M
ECR93006TR-4	67	56,473	SDC	3683	A44192M
ECR9304T	66	4,844	SDC	465	1072M
ECR9306T	66	7,926	SDC	680	1272M
ECR93504T-4	67	49,861	SDC	3027	A44160M
ECR93504TR-4	67	49,861	SDC	3027	A44160M
ECR93506TR-4	67	62,747	SDC	3683	A44208M
ECR94004T-4	67	57,979	SDC	3875	A44192M
ECR94004TR-4	67	57,979	SDC	3875	A44192M
ECR9404T	66	6,274	SDC	645	1264M
ECR9406TR	66	14,690	SDC	918	A3668M
ECR9504T	66	7,657	SDC	700	1272M
ECR9506TR	66	17,206	SDC	930	A3668M
ECR9508TR	66	16,221	SDC	1322	A40060M
ECR9604T	66	14,518	SDC	977	A3662M
ECR9604TR	66	15,415	SDC	977	A3662M

Catalog Number	Page Number	List Price	Disc. Sym.	Ship Wgt[1]	Type Code
ECR9606TR	66	15,776	SDC	1322	A40064M
ECR9608TR	66	18,343	SDC	1420	A4064M
ECR9754T	66	16,685	SDC	962	A36070M
ECR9754TR	66	17,582	SDC	962	A36070M
ECR9756TR-4	66	18,106	SDC	1422	A40064M
ECR9758TR-4	66	22,459	SDC	1874	A44076M
ECS100A1H1DB4	245	2,607	EC3	48	3514B
ECS100A1H1DC4	246	2,607	EC3	48	3514B
ECS100A1H1DF4	245	2,566	EC3	49	3514B
ECS100A2H1DB4	245	2,607	EC3	48	3514B
ECS100A2H1DC4	246	2,607	EC3	48	3514B
ECS100A2H1DF4	245	2,566	EC3	35	3514B
ECS100A2H2DB4	245	3,022	EC3	42	3520B
ECS100A2H2DC4	246	3,022	EC3	42	3520B
ECS100A2H2DF4	245	2,981	EC3	38	3520B
ECS100A2H3EB4	245	3,412	EC3	85	3624B
ECS100A2H3EC4	246	3,412	EC3	85	3624B
ECS100A2H3EF4	245	3,372	EC3	66	3624B
ECS100A2H5EB4	245	3,611	EC3	98	3632B
ECS100A2H5EC4	246	3,611	EC3	98	3632B
ECS100A2H5EF4	245	3,570	EC3	76	3632B
ECS100A4H1DB4	245	2,607	EC3	48	3514B
ECS100A4H1DC4	246	2,607	EC3	48	3514B
ECS100A4H1DF4	245	2,566	EC3	35	3514B
ECS100A4H2DB4	245	2,842	EC3	42	3520B
ECS100A4H2DC4	246	2,842	EC3	42	3520B
ECS100A4H2DF4	245	2,801	EC3	38	3520B
ECS100A4H3DB4	245	3,394	EC3	51	3528B
ECS100A4H3DC4	246	3,394	EC3	51	3528B
ECS100A4H3DF4	245	3,352	EC3	46	3528B
ECS100A4H3EB4	245	3,413	EC3	85	3624B
ECS100A4H3EC4	246	3,413	EC3	85	3624B
ECS100A4H3EF4	245	3,372	EC3	66	3624B
ECS100A4H5EB4	245	3,611	EC3	98	3632B
ECS100A4H5EC4	246	3,611	EC3	98	3632B
ECS100A4H5EF4	245	3,570	EC3	76	3632B
ECS100A4H7EB4	245	4,486	EC3	151	3648B
ECS100A4H7EC4	246	4,486	EC3	151	3648B
ECS100A4H7EF4	245	4,444	EC3	101	3648B
ECS100A8H1DB4	245	2,607	EC3	48	3514B
ECS100A8H1DC4	246	2,607	EC3	48	3514B
ECS100A8H1DF4	245	2,566	EC3	35	3514B
ECS100A8H2DB4	245	3,022	EC3	42	3520B
ECS100A8H2DC4	246	3,022	EC3	42	3520B
ECS100A8H2DF4	245	2,981	EC3	38	3520B
ECS100B	248	267	SVC	1	–
ECS100L	248	121	SVC	1	–
ECS100T1H1DB4	243	2,607	EC2	48	3514B
ECS100T1H1DC4	244	2,607	EC2	48	3514B
ECS100T1H1DF4	243	2,566	EC2	35	3514B
ECS100T2H1DB4	243	2,607	EC2	48	3514B
ECS100T2H1DC4	244	2,607	EC2	48	3514B
ECS100T2H1DF4	243	2,566	EC2	35	3514B
ECS100T2H2DB4	243	3,022	EC2	42	3520B
ECS100T2H2DC4	244	3,022	EC2	42	3520B
ECS100T2H2DF4	243	2,981	EC2	41	3520B
ECS100T2H3EB4	243	3,413	EC2	85	3624B
ECS100T2H3EC4	244	3,413	EC2	85	3624B
ECS100T2H3EF4	243	3,372	EC2	66	3624B
ECS100T2H5EB4	243	3,611	EC2	98	3632B
ECS100T2H5EC4	244	3,611	EC2	98	3632B
ECS100T2H5EF4	243	3,570	EC2	77	3632B
ECS100T4H10FB4	243	5,662	EC2	131	3740B
ECS100T4H10FC4	244	5,662	EC2	131	3740B
ECS100T4H10FF4	243	5,621	EC2	132	3740B
ECS100T4H1DB4	243	2,607	EC2	48	3514B
ECS100T4H1DC4	244	2,607	EC2	48	3514B
ECS100T4H1DF4	243	2,566	EC2	35	3514B
ECS100T4H2DB4	243	2,842	EC2	42	3520B

[1] Shipping weight (lbs.) is approximate.

Index

Catalog Number	Page Number	List Price	Disc. Sym.	Ship Wgt(1)	Type Code
ECS100T4H2DC4	244	2,842	EC2	42	3520B
ECS100T4H2DF4	243	2,801	EC2	41	3520B
ECS100T4H3DB4	243	3,394	EC2	51	3528B
ECS100T4H3DC4	244	3,394	EC2	51	3528B
ECS100T4H3DF4	243	3,352	EC2	47	3528B
ECS100T4H3EB4	243	3,413	EC2	85	3624B
ECS100T4H3EC4	244	3,413	EC2	85	3624B
ECS100T4H3EF4	243	3,372	EC2	66	3624B
ECS100T4H5EB4	243	3,611	EC2	98	3632B
ECS100T4H5EC4	244	3,611	EC2	98	3632B
ECS100T4H5EF4	243	3,570	EC2	77	3632B
ECS100T4H7EB4	243	4,486	EC2	151	3648B
ECS100T4H7EC4	244	4,486	EC2	151	3648B
ECS100T4H7EF4	243	4,444	EC2	106	3648B
ECS100T4H7FB4	243	4,813	EC2	167	3730B
ECS100T4H7FC4	244	4,813	EC2	167	3730B
ECS100T4H7FF4	243	4,771	EC2	111	3730B
ECS100T8H1DB4	243	2,607	EC2	48	3514B
ECS100T8H1DC4	244	2,607	EC2	48	3514B
ECS100T8H1DF4	243	2,566	EC2	35	3514B
ECS100T8H2DB4	243	3,022	EC2	42	3520B
ECS100T8H2DC4	244	3,022	EC2	42	3520B
ECS100T8H2DF4	243	2,981	EC2	41	3520B
ECS100U	248	541	SVC	1	–
ECS101A1H1DB4	247	2,607	EC3	36	–
ECS101A2H1DB4	247	2,607	EC3	35	–
ECS101A2H2DB4	247	3,022	EC3	41	–
ECS101A2H3EB4	247	3,413	EC3	66	–
ECS101A2H5EB4	247	3,611	EC3	77	–
ECS101A4H1DB4	247	2,607	EC3	35	–
ECS101A4H2DB4	247	2,842	EC3	41	–
ECS101A4H3DB4	247	3,394	EC3	47	–
ECS101A4H3EB4	247	3,413	EC3	67	–
ECS101A4H5EB4	247	3,611	EC3	77	–
ECS101A4H7EB4	247	4,486	EC3	106	–
ECS101A8H1DB4	247	2,607	EC3	35	–
ECS101A8H2DB4	247	3,022	EC3	41	–
ECS101M0H10FB4	242	3,355	EC1	131	3740B
ECS101M0H10FC4	242	3,355	EC1	131	3740B
ECS101M0H10FF4	242	3,314	EC1	123	3740B
ECS101M0H15FB4	242	4,643	EC1	262	3760B
ECS101M0H15FC4	242	4,643	EC1	262	3760B
ECS101M0H15FF4	242	4,602	EC1	168	3760B
ECS101M0H1DB4	242	1,577	EC1	48	3514B
ECS101M0H1DC4	242	1,577	EC1	48	3514B
ECS101M0H1DF4	242	1,535	EC1	28	3514B
ECS101M0H2DB4	242	1,725	EC1	42	3520B
ECS101M0H2DC4	242	1,725	EC1	42	3520B
ECS101M0H2DF4	242	1,684	EC1	35	3520B
ECS101M0H3DB4	242	1,807	EC1	51	3528B
ECS101M0H3DC4	242	1,807	EC1	51	3528B
ECS101M0H3DF4	242	1,765	EC1	44	3528B
ECS101M0H3EB4	242	1,887	EC1	85	3624B
ECS101M0H3EC4	242	1,887	EC1	85	3624B
ECS101M0H3EF4	242	1,846	EC1	59	3624B
ECS101M0H5DB4	242	1,960	EC1	70	3548B
ECS101M0H5DC4	242	1,960	EC1	70	3548B
ECS101M0H5DF4	242	1,919	EC1	64	3548B
ECS101M0H5EB4	242	2,032	EC1	98	3632B
ECS101M0H5EC4	242	2,032	EC1	98	3632B
ECS101M0H5EF4	242	1,990	EC1	68	3632B
ECS101M0H7EB4	242	2,438	EC1	151	3648B
ECS101M0H7EC4	242	2,438	EC1	151	3648B
ECS101M0H7EF4	242	2,396	EC1	92	3648B
ECS101M0H7FB4	242	2,844	EC1	167	3730B
ECS101M0H7FC4	242	2,844	EC1	167	3730B
ECS101M0H7FF4	242	2,802	EC1	105	3730B
ECS101M4H20FB4	242	5,047	EC1	235	3780B
ECS101M4H20FC4	242	5,047	EC1	218	–
ECS101M4H20FF4	242	5,005	EC1	218	3780B
ECS101T1H1DF4	247	2,566	EC2	49	3514B
ECS101T2H1DF4	247	2,566	EC2	49	3514B
ECS101T2H2DF4	247	2,981	EC2	42	3520B
ECS101T2H3EF4	247	3,371	EC2	88	3624B
ECS101T2H5EF4	247	3,570	EC2	100	3632B
ECS101T4H10FF4	247	5,621	EC2	131	3740B
ECS101T4H1DF4	247	2,566	EC2	49	3514B
ECS101T4H2DF4	247	2,801	EC2	42	3520B
ECS101T4H3DF4	247	3,353	EC2	51	3528B
ECS101T4H3EF4	247	3,371	EC2	88	3624B
ECS101T4H5EF4	247	3,570	EC2	100	3632B
ECS101T4H7EF4	247	4,443	EC2	156	3648B
ECS101T4H7FF4	247	4,772	EC2	178	3730B
ECS101T8H1DF4	247	2,566	EC2	49	3514B
ECS101T8H2DF4	247	2,981	EC2	42	3520B
ECTM2276T	181	4,614	HV3	290	0954M
ECTM2276T-5G	185	6,952	HV3	278	–
ECTM2276T-G	184	6,952	HV3	278	–
ECTM2276T-G-AO	183	4,685	HV3	179	–
ECTM2332T	181	5,271	HV3	297	0960M
ECTM2332T-5G	185	9,032	HV3	290	–
ECTM2332T-G	184	9,032	HV3	290	–
ECTM2332T-G-AO	183	5,352	HV3	275	–
ECTM2333T	181	4,848	HV3	278	0944M
ECTM2333T-5G	185	6,678	HV3	270	–
ECTM2333T-G	184	6,678	HV3	270	–
ECTM2333T-G-AO	183	4,921	HV3	236	–
ECTM2334T	181	5,408	HV3	293	0960M
ECTM2334T-5G	185	7,161	HV3	289	–
ECTM2334T-G	184	7,161	HV3	289	–
ECTM2334T-G-AO	183	5,489	HV3	91	–
ECTM3581T-5G	185	2,311	HV3	55	–
ECTM3581T-G	184	2,311	HV3	55	–
ECTM3582T-5G	185	2,804	HV3	56	–
ECTM3582T-G	184	2,804	HV3	56	–
ECTM3584T-5G	185	2,586	HV3	61	–
ECTM3584T-G	184	2,586	HV3	61	–
ECTM3587T-5G	185	3,476	HV3	107	–
ECTM3587T-G	184	2,701	HV3	62	–
ECTM3611T-57	181	2,462	HV3	116	3728M
ECTM3611T-G-AO	183	2,499	HV3	116	–
ECTM3615T-57	181	2,971	HV3	134	3736M
ECTM3615T-G-AO	183	3,016	HV3	134	–
ECTM3661T-5G	185	3,416	HV3	105	–
ECTM3661T-G	184	3,416	HV3	105	–
ECTM3664T-5G	185	3,323	HV3	123	–
ECTM3664T-G	184	3,323	HV3	123	–
ECTM3665T	181	2,040	HV3	108	0642M
ECTM3665T-5G	185	3,476	HV3	107	–
ECTM3665T-G	184	3,476	HV3	107	–
ECTM3665T-G-AO	183	2,072	HV3	100	–
ECTM3667T-5G	185	3,281	HV3	99	–
ECTM3667T-G	184	3,281	HV3	99	–
ECTM3704T	181	2,035	HV3	140	3738M
ECTM3704T-G-AO	183	2,066	HV3	140	–
ECTM3708T	181	2,447	HV3	185	3752M
ECTM3708T-G-AO	183	2,484	HV3	185	–
ECTM3764T-5G	185	4,795	HV3	173	–
ECTM3764T-G	184	4,795	HV3	173	–
ECTM3768T	181	3,241	HV3	227	0748M
ECTM3768T-5G	185	4,860	HV3	195	–
ECTM3768T-G	184	4,860	HV3	195	–
ECTM3768T-G-AO	183	3,290	HV3	206	–
ECTM3770T	181	2,722	HV3	170	0738M
ECTM3770T-5G	185	4,377	HV3	170	–
ECTM3770T-G	184	4,377	HV3	170	–
ECTM3770T-G-AO	183	2,764	HV3	164	–
ECTM3774T	181	3,652	HV3	231	0748M

(1) Shipping weight (lbs.) is approximate.

Index

Catalog Number	Page Number	List Price	Disc. Sym.	Ship Wgt[1]	Type Code
ECTM3774T-5G	185	5,240	HV3	232	–
ECTM3774T-G	184	5,240	HV3	232	–
ECTM3774T-G-AO	183	3,708	HV3	170	–
ECTM4100T	181	7,028	HV3	345	1046M
ECTM4100T-5G	185	10,355	HV3	391	–
ECTM4100T-G	184	10,355	HV3	391	–
ECTM4100T-G-AO	183	7,135	HV3	345	–
ECTM4102T-5G	185	14,069	HV3	399	–
ECTM4102T-G	184	14,069	HV3	399	–
ECTM4103T	181	6,656	HV3	378	1054M
ECTM4103T-5G	185	9,371	HV3	388	–
ECTM4103T-G	184	9,371	HV3	388	–
ECTM4103T-G-AO	183	6,757	HV3	343	–
ECTM4104T	181	7,899	HV3	410	1056M
ECTM4104T-5G	185	11,126	HV3	430	–
ECTM4104T-G	184	11,126	HV3	430	–
ECTM4104T-G-AO	183	8,018	HV3	363	–
ECTM4110T	181	10,330	HV3	553	1254M
ECTM4110T-5G	185	14,557	HV3	570	–
ECTM4110T-G	184	14,557	HV3	570	–
ECTM4110T-G-AO	183	10,485	HV3	529	–
ECTM4111T-5G	185	14,702	HV3	445	–
ECTM4111T-G	184	14,702	HV3	445	–
ECTM4115T	181	12,350	HV3	598	1272M
ECTM4115T-5G	185	17,086	HV3	650	–
ECTM4115T-G	184	17,086	HV3	650	–
ECTM4115T-G-AO	183	12,536	HV3	598	–
ECTM4117T-5G	185	18,952	HV3	604	–
ECTM4117T-G	184	18,952	HV3	604	–
ECTM4308T-5G	185	23,163	HV3	899	–
ECTM4308T-G	184	23,163	HV3	899	–
ECTM4312T-5G	185	27,427	HV3	902	–
ECTM4312T-G	184	27,427	HV3	902	–
ECTM4314T	181	16,241	HV3	835	A36062M
ECTM4314T-5G	185	24,392	HV3	912	–
ECTM4314T-G	184	24,392	HV3	912	–
ECTM4314T-G-AO	183	16,487	HV3	835	–
ECTM4316T-5G	185	28,065	HV3	955	–
ECTM4316T-G	184	28,065	HV3	955	–
ECTM4400T-4G	184	36,861	HV3	1203	–
ECTM4403T-5G	185	34,368	HV3	1187	–
ECTM4403T-G	184	34,368	HV3	1187	–
ECTM4404T-5G	185	41,826	HV3	1229	–
ECTM4404T-G	184	41,826	HV3	1229	–
ECTM4409T-4G	184	46,005	HV3	1828	–
EDM3546	64	1,534	SDD	35	3520M
EFM2333T	41	3,797	GE3	256	0944M
EFM2334T	41	4,604	GE3	356	0960M
EFM2394T	41	4,150	GE3	256	0930M
EFM2513T	41	3,898	GO3	214	3948M
EFM2513T-8	42	3,942	GO3	209	3948M
EFM2515T	42	4,276	GO3	226	3948M
EFM2515T-8	42	4,326	GO3	226	3948M
EFM2531T	42	5,213	GO3	313	4050M
EFM2535T	42	5,701	GO3	339	4060M
EFM2539T	42	7,436	GO3	392	4064M
EFM2543T	42	8,205	GO3	547	4256M
EFM2547T	42	10,331	GO3	622	4278M
EFM3116T	41	1,171	GO3	35	3520M
EFM3154T	41	1,223	GO3	38	3522M
EFM3157T	41	1,311	GO3	40	3526M
EFM3157T-8	42	1,324	GO3	40	3524M
EFM3211T	41	1,413	GO3	68	3630M
EFM3211T-8	42	1,433	GO3	70	3630M
EFM3212T	41	1,307	GO3	61	3622M
EFM3218T	41	1,548	GO3	84	3640M
EFM3218T-8	42	1,574	GO3	82	3640M
EFM3219T	41	2,073	GO3	77	3632M
EFM3311T	41	2,274	GO3	114	3734M

Catalog Number	Page Number	List Price	Disc. Sym.	Ship Wgt[1]	Type Code
EFM3311T-8	42	2,307	GO3	111	3734M
EFM3312T	41	2,371	GO3	107	3728M
EFM3313T	41	2,753	GO3	125	3742M
EFM3313T-8	42	2,793	GO3	127	3740M
EFM3314T	41	3,367	GO3	123	3734M
EFM3546T	41	1,215	GE3	35	3520M
EFM3554T	41	1,350	GE3	41	3526M
EFM3558T	41	1,428	GE3	41	3528M
EFM3610T	41	1,452	GE3	73	3532M
EFM3611T	41	1,466	GE3	73	3632M
EFM3613T	41	1,610	GE3	75	3630M
EFM3615T	41	1,513	GE3	91	3642M
EFM3709T	41	2,412	GE3	128	3728M
EFM3710T	41	2,183	GE3	128	3738M
EFM3711T	41	2,445	GE3	119	3730M
EFM3714T	41	2,465	GE3	165	3752M
EFM4100T	41	6,389	GE3	372	1046M
EFM4102T	41	8,507	GE3	437	1054M
EFM4103T	41	6,022	GE3	452	1054M
EFM4104T	41	7,143	GE3	408	1056M
EFM4110T	41	9,342	GE3	572	1254M
EFM4114T	41	10,586	GE3	578	1252M
EFM4115T	41	10,208	GE3	640	1272M
EFM4308T	41	13,855	GE3	899	A36062M
EFM4312T	41	16,742	GE3	868	A36062M
EFM4314T	41	14,687	GE3	800	A3658M
EFM4316T	41	17,173	GE3	840	A36070M
EFM4400T	41	18,927	GE3	1160	A40064M
EFM4403T	41	20,322	GE3	1322	A40064M
EFM4404T	41	23,664	GE3	1300	A40064M
EFM4409T-4	41	28,561	GE3	1625	A44064M
EGDM2333T	197	5,587	FD3	255	0944M
EGDM2334T	197	5,915	FD3	303	0960M
EGDM2513T	197	4,248	FD3	239	3948M
EGDM2515T	197	4,917	FD3	250	3948M
EGDM2531T	197	6,079	FD3	375	4050M
EGDM2535T	197	6,801	FD3	382	4060M
EGDM3218T	197	1,767	FD3	92	3640M
EGDM3311T	197	2,590	FD3	120	3734M
EGDM3313T	197	3,069	FD3	132	3742M
EGDM3615T	197	2,317	FD3	95	3642M
EGDM3661T	197	2,266	FD3	105	0632M
EGDM3665T	197	2,582	FD3	119	0642M
EGDM3710T	197	2,852	FD3	127	3738M
EGDM3714T	197	4,141	FD3	165	3752M
EGDM3770T	197	3,176	FD3	170	0738M
EGDM3774T	197	4,570	FD3	231	0748M
EGDM4103T	197	7,448	FD3	422	1054M
EGDM4104T	197	8,731	FD3	460	1056M
EGDM4110T	197	11,576	FD3	578	1254M
EGDM4115T	197	11,973	FD3	608	1272M
EHFM2515T	178	3,817	HV3	227	3948M
EHFM2523T	178	3,051	HV3	212	3948M
EHFM2523T-8	179	3,043	HV3	211	3948M
EHFM2531T	178	4,644	HV3	301	4050M
EHFM2535T	178	5,075	HV3	328	4060M
EHFM2539T	178	6,605	HV3	429	4064M
EHFM2543T	178	8,102	HV3	466	4256M
EHFM3157T	178	1,062	HV3	49	3526M
EHFM3211T	178	1,139	HV3	68	3630M
EHFM3218T	178	1,798	HV3	82	3640M
EHFM3311T	178	2,164	HV3	115	3734M
EHFM3313T	178	2,437	HV3	127	3742M
EHM2276T	180	4,253	HV3	294	0954M
EHM2332T	180	4,846	HV3	290	0960M
EHM2333T	180	3,409	HV3	250	0944M
EHM2333T-5	180	3,409	HV3	255	0944M
EHM2334T	180	4,123	HV3	288	0960M
EHM2334T-5	180	4,123	HV3	286	0960M

[1] Shipping weight (lbs.) is approximate.

Index

Catalog Number	Page Number	List Price	Disc. Sym.	Ship Wgt(1)	Type Code
EHM2506T	178	2,920	HV3	248	3950M
EHM2511T	178	3,782	HV3	260	3954M
EHM2515T	178	3,817	HV3	225	3948M
EHM2515T-8	179	3,817	HV3	226	3948M
EHM2523T	178	3,051	HV3	212	3948M
EHM2523T-8	179	3,051	HV3	210	3948M
EHM2524T	178	5,080	HV3	285	4038M
EHM2528T	178	6,170	HV3	375	4056M
EHM2531T	178	4,644	HV3	345	4050M
EHM2531T-8	179	4,644	HV3	369	4050M
EHM2532T	178	7,441	HV3	393	4072M
EHM2535T	178	6,605	HV3	339	4060M
EHM2535T-8	179	5,075	HV3	331	4052M
EHM2536T	178	7,759	HV3	482	4084M
EHM2539T	178	7,441	HV3	433	4064M
EHM2539T-8	179	6,605	HV3	434	4250M
EHM2543T	178	8,102	HV3	469	4256M
EHM2543T-8	179	8,102	HV3	459	4256M
EHM2547T	178	9,160	HV3	582	4272M
EHM2551T	178	11,234	HV3	752	4462M
EHM2555T	178	12,804	HV3	911	4484M
EHM3116T	178	952	HV3	35	3520M
EHM3116T-8	179	952	HV3	34	3520M
EHM3154T	178	988	HV3	37	3522M
EHM3154T-8	179	988	HV3	38	3522M
EHM3157T	178	1,062	HV3	41	3526M
EHM3157T-8	179	1,062	HV3	41	3524M
EHM3211T	178	1,139	HV3	72	3630M
EHM3211T-8	179	1,139	HV3	71	3630M
EHM3218T	178	1,237	HV3	85	3640M
EHM3218T-8	179	1,237	HV3	85	3640M
EHM3218TA	189	1,772	HV3	84	3640M
EHM3305T	178	1,879	HV3	114	3734M
EHM3309T	178	2,445	HV3	141	3744M
EHM3311T	178	1,798	HV3	115	3734M
EHM3311T-8	179	1,798	HV3	115	3734M
EHM3313T	178	2,164	HV3	127	3742M
EHM3313T-8	179	2,164	HV3	120	3740M
EHM3546T	180	1,074	HV3	37	3520M
EHM3546T-5	180	1,074	HV3	37	3520M
EHM3554T	180	1,079	HV3	44	3526M
EHM3554T-5	180	1,079	HV3	44	3526M
EHM3558T	180	1,154	HV3	46	3528M
EHM3558T-5	180	1,154	HV3	47	3528M
EHM3611T	180	1,271	HV3	73	3632M
EHM3611T-5	180	1,271	HV3	74	3632M
EHM3615T	180	1,388	HV3	93	3642M
EHM3615T-5	180	1,388	HV3	92	3642M
EHM3708T	180	2,566	HV3	154	3752M
EHM3710T	180	1,978	HV3	128	3738M
EHM3710T-5	180	1,978	HV3	127	3738M
EHM3714T	180	2,231	HV3	165	3752M
EHM3714T-5	180	2,231	HV3	165	3752M
EHM4100T	180	6,445	HV3	400	1046M
EHM4102T	180	8,564	HV3	457	1054M
EHM4103T	180	5,378	HV3	430	1056M
EHM4103T-5	180	5,378	HV3	397	1056M
EHM4104T	180	6,373	HV3	423	1060M
EHM4104T-5	180	6,373	HV3	395	1056M
EHM4110T	180	8,317	HV3	612	1264M
EHM4110T-5	180	8,317	HV3	575	1254M
EHM4111T	180	9,681	HV3	465	1072M
EHM4115T	180	9,058	HV3	622	1272M
EHM4115T-5	180	9,058	HV3	622	1266M
EHPM3615T	158	1,713	PM3	93	3642M
EHPM3710T	158	2,383	PM3	127	3738M
EHPM3714T	158	2,664	PM3	165	3752M
EJM3545	140	1,072	PJ3	27	3420M
EJM3545-5	140	1,072	PJ3	27	3420M
EJM3546	140	1,232	PJ3	37	3522M
EJM3550	140	1,212	PJ3	38	3520M
EJM3554	140	1,367	PJ3	41	3526M
EJM3555	140	1,326	PJ3	41	3526M
EJM3555-5	140	1,326	PJ3	41	3526M
EJM3558	140	1,444	PJ3	48	3530M
EJM3559	140	1,451	PJ3	50	3532M
EJM3559-5	140	1,451	PJ3	50	3532M
EJMM2333T	147	5,045	PC3	268	0944M
EJMM2333T-5	148	4,973	PC3	268	0944M
EJMM2333T-G	145	5,528	PC3	265	0944M
EJMM2334T	148	5,780	PC3	304	0960M
EJMM2334T-G	145	6,175	PC3	308	0960M
EJMM2394T	147	5,325	PC3	257	0930M
EJMM2394T-5	148	5,325	PC3	225	0750M
EJMM2394T-G	145	5,572	PC3	260	0930M
EJMM2506T	150	4,039	PC3	248	3950M
EJMM2511T	150	4,902	PC3	255	3954M
EJMM2513T	150	4,135	PC3	214	3948M
EJMM2513T-G	146	4,617	PC3	213	3948M
EJMM2514T	150	4,599	PC3	185	3928M
EJMM2514T-G	146	5,014	PC3	185	3928M
EJMM2515T	150	4,953	PC3	248	3948M
EJMM2515T-G	146	5,368	PC3	255	3948M
EJMM2516T	151	5,925	PC3	207	3938M
EJMM2516T-G	146	6,340	PC3	233	3938M
EJMM2524T	150	6,434	PC3	300	4038M
EJMM2531T	151	5,892	PC3	317	4050M
EJMM2531T-G	146	6,518	PC3	377	4050M
EJMM2534T	151	7,015	PC3	309	3948M
EJMM2534T-G	146	7,430	PC3	320	4040M
EJMM2535T	151	7,110	PC3	359	4060M
EJMM2535T-G	146	7,525	PC3	378	4060M
EJMM2538T	151	8,630	PC3	328	3956M
EJMM2538T-G	146	9,045	PC3	330	4046M
EJMM2539T	151	9,169	PC3	417	4064M
EJMM2539T-G	146	9,584	PC3	378	4064M
EJMM2542T	151	9,597	PC3	421	4248M
EJMM2542T-G	146	10,012	PC3	375	4058M
EJMM2543T	151	9,938	PC3	491	4256M
EJMM2543T-G	146	10,353	PC3	497	4256M
EJMM2546T	151	11,683	PC3	472	4250M
EJMM3116T	150	1,164	PC3	38	3520M
EJMM3116T-G	146	1,438	PC3	37	3520M
EJMM3120T	150	1,256	PC3	34	3518M
EJMM3154T	150	1,260	PC3	38	3522M
EJMM3154T-G	146	1,533	PC3	41	3522M
EJMM3155T	150	1,431	PC3	44	3524M
EJMM3157T	150	1,378	PC3	44	3526M
EJMM3157T-G	146	1,652	PC3	44	3526M
EJMM3158T	150	1,564	PC3	49	3530M
EJMM3158T-5	151	1,446	PC3	48	3528M
EJMM3158T-G	146	1,838	PC3	51	3530M
EJMM3211T	150	1,525	PC3	72	3630M
EJMM3211T-5	151	1,834	PC3	74	3630M
EJMM3211T-G	146	1,867	PC3	74	3630M
EJMM3212T	150	1,864	PC3	64	3622M
EJMM3212T-5	151	1,729	PC3	63	3622M
EJMM3212T-G	146	2,207	PC3	64	3622M
EJMM3218T	150	1,724	PC3	87	3640M
EJMM3218T-5	151	1,969	PC3	92	3640M
EJMM3218T-G	146	2,067	PC3	88	3640M
EJMM3219T	150	2,203	PC3	78	3632M
EJMM3219T-5	151	2,495	PC3	77	3632M
EJMM3219T-G	146	2,546	PC3	78	3632M
EJMM3309T	150	2,939	PC3	141	3744M
EJMM3311T	150	2,824	PC3	120	3734M
EJMM3311T-5	151	2,824	PC3	120	3734M
EJMM3311T-G	146	3,015	PC3	120	3734M

(1) Shipping weight (lbs.) is approximate.

Index

Catalog Number	Page Number	List Price	Disc. Sym.	Ship Wgt(1)	Type Code
EJMM3312T	150	2,921	PC3	120	3728M
EJMM3312T-5	151	2,921	PC3	137	3728M
EJMM3312T-G	146	3,267	PC3	121	3728M
EJMM3313T	150	2,796	PC3	136	3742M
EJMM3313T-5	151	3,303	PC3	132	3740M
EJMM3313T-G	146	3,226	PC3	132	3742M
EJMM3314T	150	3,917	PC3	131	3734M
EJMM3314T-5	151	3,917	PC3	131	3734M
EJMM3314T-G	146	4,082	PC3	134	3734M
EJMM3546T	147	1,362	PC3	40	3520M
EJMM3546T-5	148	1,464	PC3	38	3520M
EJMM3546T-G	145	1,518	PC3	37	3520M
EJMM3550T	147	1,354	PC3	47	3520M
EJMM3550T-5	148	1,444	PC3	38	3520M
EJMM3550T-G	145	1,510	PC3	38	3520M
EJMM3554T	147	1,451	PC3	44	3526M
EJMM3554T-5	148	1,599	PC3	41	3526M
EJMM3554T-G	145	1,755	PC3	41	3526M
EJMM3555T	147	1,558	PC3	47	3526M
EJMM3555T-5	148	1,558	PC3	41	3526M
EJMM3555T-G	145	1,714	PC3	41	3526M
EJMM3558T	147	1,755	PC3	50	3528M
EJMM3558T-5	148	1,676	PC3	45	3528M
EJMM3558T-G	145	1,833	PC3	45	3528M
EJMM3559T	147	1,683	PC3	54	3532M
EJMM3559T-5	148	1,683	PC3	50	3532M
EJMM3610T	147	1,992	PC3	56	3532M
EJMM3610T-5	148	1,874	PC3	63	3622M
EJMM3610T-G	145	1,905	PC3	60	3532M
EJMM3611T	147	1,887	PC3	76	3632M
EJMM3611T-5	148	1,887	PC3	70	3632M
EJMM3611T-G	145	2,062	PC3	76	3632M
EJMM3613T	147	2,032	PC3	79	3630M
EJMM3613T-5	148	2,032	PC3	74	3630M
EJMM3613T-G	145	2,195	PC3	81	3630M
EJMM3615T	147	1,724	PC3	93	3642M
EJMM3615T-5	148	1,935	PC3	93	3642M
EJMM3615T-G	145	2,067	PC3	93	3642M
EJMM3616T	147	2,292	PC3	101	3646M
EJMM3616T-5	148	2,546	PC3	96	3646M
EJMM3709T	147	2,427	PC3	125	3728M
EJMM3709T-G	145	2,857	PC3	124	3728M
EJMM3710T	147	2,733	PC3	134	3738M
EJMM3710T-5	148	2,733	PC3	127	3738M
EJMM3710T-G	145	3,053	PC3	134	3738M
EJMM3711T	147	2,995	PC3	130	3730M
EJMM3711T-5	148	2,995	PC3	118	3728M
EJMM3711T-G	145	3,216	PC3	124	3730M
EJMM3713T	147	4,197	PC3	169	3752M
EJMM3713T-5	148	4,000	PC3	169	3752M
EJMM3714T	147	3,083	PC3	165	3752M
EJMM3714T-5	148	3,015	PC3	165	3752M
EJMM3714T-G	145	3,512	PC3	165	3752M
EJMM4103T	148	6,746	PC3	387	1054M
EJMM4103T-G	145	6,928	PC3	437	1054M
EJMM4104T	148	9,541	PC3	422	1056M
EJMM4104T-G	145	9,371	PC3	437	1056M
EJMM4106T	148	5,730	PC3	281	0936M
EJMM4106T-G	145	6,088	PC3	274	0936M
EJMM4107T	148	6,513	PC3	353	0944M
EJMM4107T-G	145	7,161	PC3	265	0944M
EJMM4108T	148	8,956	PC3	406	1048M
EJMM4108T-G	145	9,956	PC3	299	0950M
EJMM4109T	148	10,142	PC3	487	1058M
EJMM4109T-G	145	10,557	PC3	470	1058M
EJMM4110T	148	11,074	PC3	586	1254M
EJMM4110T-G	145	11,489	PC3	578	1254M
EJMM4114T	148	12,319	PC3	595	1252M
EJMM4114T-G	145	12,734	PC3	575	1252M
EJMM4115T	148	12,490	PC3	624	1272M
EJMM4115T-G	145	12,905	PC3	700	1272M
EJPM2333T	147	5,045	PC3	268	0944M
EJPM2334T	148	5,780	PC3	300	0960M
EJPM2394T	147	5,325	PC3	260	0930M
EJPM2513T	150	4,135	PC3	250	3948M
EJPM2514T	150	4,599	PC3	185	3928M
EJPM2515T	150	4,953	PC3	236	3948M
EJPM2516T	151	5,925	PC3	230	3938M
EJPM2531T	151	5,892	PC3	335	4050M
EJPM2534T	151	7,015	PC3	310	3948M
EJPM2535T	151	7,110	PC3	370	4060M
EJPM2538T	151	8,630	PC3	329	3956M
EJPM2539T	151	9,169	PC3	378	4064M
EJPM2542T	151	9,597	PC3	424	4248M
EJPM2543T	151	9,938	PC3	500	4256M
EJPM2547T	151	12,269	PC3	565	4278M
EJPM2551T	151	14,619	PC3	597	4462M
EJPM3116T	150	1,419	PC3	38	3520M
EJPM3154T	150	1,472	PC3	37	3522M
EJPM3157T	150	1,559	PC3	43	3526M
EJPM3158T	150	1,446	PC3	48	3528M
EJPM3211T	150	1,834	PC3	74	3630M
EJPM3212T	150	1,729	PC3	63	3622M
EJPM3218T	150	1,969	PC3	92	3640M
EJPM3219T	150	2,495	PC3	77	3632M
EJPM3311T	150	2,824	PC3	130	3734M
EJPM3312T	150	2,921	PC3	122	3728M
EJPM3313T	150	2,796	PC3	138	3742M
EJPM3314T	150	3,917	PC3	134	3734M
EJPM3554T	147	1,599	PC3	41	3526M
EJPM3555T	147	1,558	PC3	41	3526M
EJPM3558T	147	1,676	PC3	48	3530M
EJPM3559T	147	1,683	PC3	50	3532M
EJPM3610T	147	1,874	PC3	50	3532M
EJPM3611T	147	1,887	PC3	70	3632M
EJPM3613T	147	2,032	PC3	81	3634M
EJPM3615T	147	1,935	PC3	96	3644M
EJPM3616T	147	2,546	PC3	96	3646M
EJPM3709T	147	2,962	PC3	121	3728M
EJPM3710T	147	2,733	PC3	129	3738M
EJPM3711T	147	2,995	PC3	118	3730M
EJPM3713T	147	4,000	PC3	169	3752M
EJPM3714T	147	3,083	PC3	165	3752M
EJPM4103T	148	6,746	PC3	412	1054M
EJPM4104T	148	9,541	PC3	452	1056M
EJPM4106T	148	5,730	PC3	229	0936M
EJPM4107T	148	6,513	PC3	349	0944M
EJPM4108T	148	8,956	PC3	405	1048M
EJPM4109T	148	10,142	PC3	498	1058M
EJPM4110T	148	11,074	PC3	602	1254M
EJPM4114T	148	12,319	PC3	604	1252M
EJPM4115T	148	12,490	PC3	646	1272M
EL11203	20	678	GO1	19	3411LC
EL11203M	20	723	GO1	19	3411LC
EL11204	20	809	GO1	25	3416LC
EL11205	20	716	GO1	24	3413LC
EL11206	20	729	GO1	27	3418LC
EL11206M	20	774	GO1	27	3418LC
EL11207	20	863	GO1	27	3421LC
EL11208	20	762	GO1	24	3413LC
EL11209	20	818	GO1	32	3424LC
EL11209M	20	863	GO1	32	3424LC
EL11300	20	841	GO1	25	3416LC
EL11301	20	729	GO1	27	3418LC
EL11301M	20	774	GO1	27	3418LC
EL11302	20	863	GO1	30	3421LC
EL11303	20	762	GO1	24	3413LC
EL11304	20	818	GO1	32	3424LC

(1) Shipping weight (lbs.) is approximate.

Index

Catalog Number	Page Number	List Price	Disc. Sym.	Ship Wgt(1)	Type Code
EL11304A	20	863	GO1	32	3424LC
EL11305	20	1,296	GO1	46	3526LC
EL11306	20	797	GO1	39	3428LC
EL11306A	20	841	GO1	39	3428LC
EL11307	20	975	GO1	39	3524LC
EL11307A	20	1,019	GO1	39	3524LC
EL11307M	20	1,019	GO1	39	3524LC
EL11308	20	1,459	GO1	47	3530LC
EL11309	20	935	GO1	43	3524LC
EL11309A	20	978	GO1	43	3524LC
EL11313	20	1,062	GO1	52	3532LC
EL11313A	20	1,107	GO1	52	3532LC
EL11317	21	1,174	GO1	66	3540LC
EL11317A	21	1,219	GO1	66	3540LC
EL11318	20	1,123	GO1	44	3528LC
EL11318M	20	1,166	GO1	44	3528LC
EL11319	20	1,337	GO1	59	3540LC
EL11319M	20	1,446	GO1	59	3540LC
EL1319T	20	1,485	GO1	50	3535LC
EL1405T	21	1,797	GO1	65	3623LC
EL1406T	21	1,892	GO1	70	3628LC
EL1408T	21	1,880	GO1	81	3634LC
EL1409T	21	2,246	GO1	79	3634LC
EL1410T	21	2,147	GO1	97	3646LC
EL3403	17	744	GE1	24	3414LC
EL3501	17	822	GE1	27	3418LC
EL3503	17	807	GE1	23	3413LC
EL3504	17	970	GE1	30	3424LC
EL3506	17	907	GE1	29	3424LC
EL3507	17	1,179	GE1	44	3528LC
EL3509	18	1,047	GE1	38	3520LC
EL3510	18	1,355	GE1	45	3532LC
EL3514	18	1,543	GE1	58	3540LC
EL3514T	18	1,543	GE1	58	3540LC
EL3515T	18	1,810	GE1	65	3535LC
EL3605T	18	2,109	GE1	66	3623LC
EL3606T	18	1,969	GE1	79	3634LC
EL3608T	18	2,714	GE1	91	3640LC
EL3609T	18	2,462	GE1	89	3640LC
EL3612T	18	2,936	GE1	97	3646LC
EM2237	209	5,138	DPL	254	0936M
EM2238	209	6,438	DPL	252	0936M
EM2275	209	6,033	DPL	226	0748M
EM2276	209	7,254	DPL	295	0954M
EM2276T	24	4,197	GE3	278	0954M
EM2276T-BG	167	4,630	HV3	310	0954M
EM2276T-G	172	4,680	HV3	281	0954M
EM2280T	24	5,982	GE3	256	0940M
EM2332T	24	4,790	GE3	290	0960M
EM2332T-BG	167	5,223	HV3	322	0960M
EM2332T-G	173	5,273	HV3	322	0960M
EM2333	209	8,862	DPL	315	0944M
EM2333T	25	3,371	GE3	270	0944M
EM2333T-5	27	3,371	GE3	258	0944M
EM2333T-58	238	4,140	5E3	291	0948M
EM2333T-5G	173	4,280	HV3	250	0944M
EM2333T-8	26	3,797	GE3	255	0944M
EM2333T-8G	173	4,280	HV3	254	0936M
EM2333T-BG	168	4,230	HV3	274	0944M
EM2333T-G	173	4,280	HV3	270	0944M
EM2334	209	10,606	DPL	318	0960M
EM2334T	25	4,087	GE3	289	0960M
EM2334T-12	25	5,174	GE3	291	0960M
EM2334T-5	27	4,087	GE3	290	0960M
EM2334T-58	238	5,019	5E3	304	0956M
EM2334T-5G	173	5,087	HV3	293	0960M
EM2334T-8	26	4,604	GE3	292	0960M
EM2334T-BG	168	5,037	HV3	290	0960M
EM2334T-G	173	5,087	HV3	295	0960M

Catalog Number	Page Number	List Price	Disc. Sym.	Ship Wgt(1)	Type Code
EM2394T	25	4,150	GE3	241	0930M
EM2394T-5	27	4,150	GE3	245	0930M
EM2394T-8	26	4,150	GE3	240	0930M
EM2394T-BG	168	4,583	HV3	253	0930M
EM2394T-G	173	4,632	HV3	239	0930M
EM2395T	25	10,651	GE3	455	1060M
EM2401T	24	6,597	GE3	320	0960M
EM2402T	24	7,659	GE3	391	1046M
EM2504T	35	4,741	GO3	240	3948M
EM2506T	35	2,864	GO3	239	3950M
EM2506T-BG	169	3,297	HV3	248	3950M
EM2506T-G	176	3,346	HV3	243	3950M
EM2508T	35	5,933	GO3	260	3962M
EM251152T-4	204	21,599	DPC	1140	A40058M
EM2511T	35	3,726	GO3	255	3954M
EM2511T-BG	169	4,159	HV3	255	3954M
EM2511T-G	176	4,209	HV3	255	3954M
EM251202T-4	204	24,476	DPC	1737	A44056M
EM251252T-4	204	28,713	DPC	1539	A44068M
EM251302T-4	204	44,878	DPC	1899	A44084M
EM251352T-4	204	51,360	DPC	1899	A44084M
EM2513T	35	3,460	GO3	211	3948M
EM2513T-5	37	3,460	GO3	273	3948M
EM2513T-58	238	4,250	5O3	230	3942M
EM2513T-5BG	169	4,331	HV3	250	3948M
EM2513T-5G	177	4,380	HV3	210	3948M
EM2513T-8	37	3,898	GO3	209	3948M
EM2513T-8G	177	4,380	HV3	234	3948M
EM2513T-BG	169	4,331	HV3	234	3948M
EM2513T-CI	35	3,710	GO3	238	0936M
EM2513T-G	176	4,380	HV3	210	3948M
EM251402T-4	204	60,255	DPC	4000	A44112M
EM251452T-4	204	66,351	DPC	4000	A44112M
EM2514T	35	3,955	GO3	191	3928M
EM2514T-8	37	3,955	GO3	190	3928M
EM2514T-G	176	4,438	HV3	195	3928M
EM251502T-4	204	73,356	DPC	2595	A44128M
EM2515T	35	4,276	GO3	225	3948M
EM2515T-12	35	4,846	GO3	225	3948M
EM2515T-5	37	4,276	GO3	227	3948M
EM2515T-58	238	4,662	5O3	275	3956M
EM2515T-5BG	169	4,709	HV3	250	3948M
EM2515T-5G	177	4,759	HV3	250	3948M
EM2515T-8	37	4,276	GO3	227	3948M
EM2515T-8G	177	4,759	HV3	250	3948M
EM2515T-BG	169	4,709	HV3	228	3948M
EM2515T-CI	35	4,662	GO3	281	0946M
EM2515T-G	176	4,759	HV3	227	3948M
EM2516T	35	4,749	GO3	222	3938M
EM2516T-8	37	4,749	GO3	220	3938M
EM2516T-G	176	5,231	HV3	212	3938M
EM2524T	35	5,024	GO3	278	4038M
EM2524T-BG	169	5,516	HV3	300	4038M
EM2524T-G	176	5,645	HV3	280	4038M
EM25254T-4	36	28,171	GO3	2036	A44100M
EM2528T	35	6,114	GO3	302	4056M
EM2528T-BG	169	6,606	HV3	321	4056M
EM2528T-G	176	6,735	HV3	299	4056M
EM2531T	35	5,213	GO3	331	4050M
EM2531T-12	35	6,117	GO3	307	4050M
EM2531T-5	37	5,213	GO3	312	4050M
EM2531T-5BG	169	5,706	HV3	388	4050M
EM2531T-5G	177	5,834	HV3	328	4050M
EM2531T-8	37	5,213	GO3	333	4050M
EM2531T-8G	177	5,834	HV3	330	4050M
EM2531T-BG	169	5,706	HV3	387	4050M
EM2531T-CI	35	5,683	GO3	382	1050M
EM2531T-G	176	5,834	HV3	377	4050M
EM2532T	35	7,385	GO3	411	4072M

(1) Shipping weight (lbs.) is approximate.

Index

Catalog Number	Page Number	List Price	Disc. Sym.	Ship Wgt(1)	Type Code
EM2532T-G	176	8,136	HV3	384	4072M
EM2534T	35	5,605	GO3	308	4040M
EM2534T-8	37	5,605	GO3	320	4040M
EM2534T-G	176	6,226	HV3	310	4040M
EM2535T	35	5,701	GO3	362	4060M
EM2535T-12	35	6,605	GO3	339	4060M
EM2535T-5	37	5,701	GO3	333	4060M
EM2535T-5BG	169	6,193	HV3	378	4060M
EM2535T-5G	177	6,322	HV3	340	4060M
EM2535T-8	37	5,701	GO3	278	4060M
EM2535T-8G	177	6,322	HV3	340	4060M
EM2535T-BG	169	6,193	HV3	341	4060M
EM2535T-CI	35	6,213	GO3	393	1052M
EM2535T-G	176	6,322	HV3	340	4060M
EM2536T	35	7,703	GO3	380	4084M
EM2536T-G	176	8,454	HV3	457	4084M
EM2538T	35	7,221	GO3	329	4046M
EM2538T-8	37	7,221	GO3	362	4046M
EM2538T-CI	35	7,871	GO3	402	1046M
EM2538T-G	176	7,841	HV3	328	4046M
EM2539T	35	7,436	GO3	396	4064M
EM2539T-12	35	8,838	GO3	397	4064M
EM2539T-5	37	7,436	GO3	397	4064M
EM2539T-5BG	169	8,039	HV3	400	4064M
EM2539T-5G	177	8,187	HV3	400	4064M
EM2539T-8	37	7,436	GO3	434	4064M
EM2539T-8G	177	8,187	HV3	390	4064M
EM2539T-BG	169	8,039	HV3	324	4064M
EM2539T-CI	35	8,107	GO3	538	1250M
EM2539T-G	176	8,187	HV3	392	4064M
EM25402T-4	36	60,255	GO3	2083	A44112M
EM25404T-4	36	55,073	GO3	2799	A44140M
EM2540T	35	10,418	GO3	598	4278M
EM2540T-CI	35	10,973	GO3	801	A36062M
EM2540T-G	176	11,807	HV3	606	4278M
EM2542T	36	7,864	GO3	394	4058M
EM2542T-8	37	7,864	GO3	375	4058M
EM2542T-CI	36	8,918	GO3	548	1250M
EM2542T-G	176	8,615	HV3	392	4058M
EM2543T	36	8,205	GO3	467	4256M
EM2543T-12	36	9,607	GO3	468	4256M
EM2543T-5	37	8,205	GO3	465	4256M
EM2543T-5BG	169	8,808	HV3	525	4256M
EM2543T-8	37	8,205	GO3	467	4256M
EM2543T-BG	169	8,808	HV3	497	4256M
EM2543T-CI	36	8,946	GO3	570	1256M
EM2543T-G	176	8,956	HV3	473	4256M
EM2543TS-12	36	9,607	GO3	469	4256M
EM2544T	36	12,582	GO3	762	4466M
EM2544T-CI	36	13,285	GO3	722	A36052M
EM25452T-4	36	66,351	GO3	2284	A44112M
EM25454T-4	36	62,284	GO3	2888	A44144M
EM2546T	36	9,951	GO3	458	4250M
EM2547T	36	10,331	GO3	615	4278M
EM2547T-12	36	12,534	GO3	620	4278M
EM2547T-5	37	10,331	GO3	430	4278M
EM2547T-8	37	10,331	GO3	623	4278M
EM2547T-CI	36	11,260	GO3	745	A36050M
EM2547T-G	177	11,719	HV3	616	4278M
EM2547TS-12	36	12,534	GO3	613	4278M
EM2548T	36	15,500	GO3	888	4480M
EM2548T-4CI	36	16,865	GO3	1009	A40052M
EM2549T	36	13,051	GO3	502	4254M
EM2550T	36	13,952	GO3	562	4266M
EM2551T	36	12,681	GO3	744	4462M
EM2551T-12	36	14,884	GO3	758	4462M
EM2551T-5	37	12,681	GO3	740	4462M
EM2551T-8	37	12,681	GO3	783	A36056M
EM2551T-CI	36	13,819	GO3	762	A36056M

Catalog Number	Page Number	List Price	Disc. Sym.	Ship Wgt(1)	Type Code
EM2551T-G	177	14,067	HV3	750	4462M
EM2551TS-12	36	14,884	GO3	749	4462M
EM2552T-4	36	18,777	GO3	1067	A40064M
EM2554T-4	36	17,509	GO3	894	4476M
EM2554T-4CI	36	20,891	GO3	997	A40048M
EM2555T	36	14,752	GO3	930	4484M
EM2555T-12	36	17,952	GO3	946	4484M
EM2555T-4	36	14,752	GO3	896	4484M
EM2555T-4G	177	16,727	HV3	898	4484M
EM2555T-5	37	14,752	GO3	943	4484M
EM2555T-CI	36	16,080	GO3	1038	A40052M
EM2555TS-12	36	17,952	GO3	941	4484M
EM2556T-4	36	21,599	GO3	980	4464M
EM2557T-4	36	22,321	GO3	1513	A44062M
EM2558T-4	36	20,103	GO3	1528	A44062M
EM2558T-5	37	20,103	GO3	1535	A44062M
EM2558TS-4	36	20,103	GO3	1519	A44062M
EM2559T-4	36	18,099	GO3	955	4488M
EM2559T-4CI	36	19,724	GO3	1118	A40064M
EM2559T-5	37	18,099	GO3	960	4488M
EM2559TS-4	36	18,099	GO3	1238	4488M
EM2560T-4	36	26,286	GO3	1572	A44072M
EM2562T-4	36	24,476	GO3	1364	A44056M
EM2563T-4	36	25,122	GO3	1625	A44072M
EM2564T-4	36	34,554	GO3	1827	A44090M
EM2565T-4	36	28,713	GO3	1539	A44068M
EM2568T-4	36	44,878	GO3	1539	A44068M
EM25694T-4	36	42,960	GO3	2151	A44112M
EM2571T-4	36	51,360	GO3	1899	A44112M
EM2572T-4	36	50,744	GO3	2694	A44128M
EM2583T-4	36	20,667	GO3	1455	A44056M
EM30003	34	703	GO3	21	3413M
EM30004	34	777	GO3	24	3416M
EM30006	34	738	GO3	22	3413M
EM30007	34	743	GO3	24	3416M
EM30008	34	813	GO3	27	3421M
EM30009	34	794	GO3	24	3416M
EM30010	34	818	GO3	31	3424M
EM30011	34	894	GO3	34	3428M
EM30012	34	790	GO3	22	3416M
EM31101	34	777	GO3	24	3416M
EM31104	34	743	GO3	24	3416M
EM31104-5	37	743	GO3	24	3416M
EM31105	34	813	GO3	27	3421M
EM31107	34	794	GO3	24	3416M
EM31108	34	818	GO3	31	3424M
EM31108-5	37	818	GO3	31	3424M
EM31108A	34	929	GO3	31	3424M
EM31109	34	894	GO3	34	3428M
EM31111	34	790	GO3	24	3416M
EM31112	34	901	GO3	32	3516M
EM31112-5	37	901	GO3	33	3514M
EM31112A	34	1,011	GO3	32	3516M
EM31115	34	810	GO3	27	3420M
EM31115-G	176	1,158	HV3	27	3512M
EM31116	34	948	GO3	29	3520M
EM31116-5	37	948	GO3	38	3520M
EM31116A	34	993	GO3	29	3520M
EM31120	34	837	GO3	34	3518M
EM31153	34	1,100	GO3	39	3524M
EM31154	34	1,039	GO3	36	3526M
EM31154A	34	1,149	GO3	41	3526M
EM31155	35	942	GO3	43	3524M
EM31156	34	1,386	GO3	41	3526M
EM31157	35	1,090	GO3	45	3530M
EM31158	35	1,056	GO3	50	3528M
EM31159	34	1,334	GO3	54	3540M
EM3116-57	238	937	5O3	34	3518M
EM3116T	34	1,039	GO3	34	3520M

(1) Shipping weight (lbs.) is approximate.

Index

Catalog Number	Page Number	List Price	Disc. Sym.	Ship Wgt(1)	Type Code
EM3116T-5	37	1,039	GO3	34	3520M
EM3116T-57	238	942	5O3	34	3518M
EM3116T-5G	177	1,444	HV3	38	3520M
EM3116T-8	37	1,171	GO3	34	3520M
EM3116T-8G	177	1,444	HV3	38	3520M
EM3116T-BG	169	1,444	HV3	38	3520M
EM3116T-G	176	1,444	HV3	34	3520M
EM3120T	34	1,008	GO3	33	3518M
EM3120T-G	176	1,281	HV3	34	3518M
EM3154T	34	1,087	GO3	37	3522M
EM3154T-5	37	1,087	GO3	37	3522M
EM3154T-57	238	1,001	5O3	41	3526M
EM3154T-5G	177	1,497	HV3	37	3522M
EM3154T-8	37	1,223	GO3	37	3522M
EM3154T-8G	177	1,497	HV3	37	3522M
EM3154T-BG	169	1,497	HV3	37	3522M
EM3154T-G	176	1,497	HV3	38	3522M
EM3155T	35	1,182	GO3	41	3524M
EM3155T-BG	169	1,456	HV3	43	3524M
EM3155T-G	176	1,456	HV3	41	3524M
EM3156T	34	1,197	GO3	36	3524M
EM3156T-G	176	1,470	HV3	40	3524M
EM3157T	35	1,164	GO3	40	3528M
EM3157T-5	37	1,164	GO3	39	3524M
EM3157T-57	238	1,029	5O3	45	3528M
EM3157T-5G	177	1,584	HV3	43	3524M
EM3157T-8	37	1,311	GO3	40	3524M
EM3157T-8G	177	1,584	HV3	43	3524M
EM3157T-BG	169	1,584	HV3	43	3526M
EM3157T-G	176	1,584	HV3	41	3528M
EM3157TA	35	1,442	GO3	44	3528M
EM3158T	35	1,197	GO3	46	3530M
EM3158T-8	37	1,197	GO3	51	3530M
EM3158T-BG	169	1,470	HV3	51	3530M
EM3158T-G	176	1,470	HV3	46	3530M
EM3207T	34	1,401	GO3	66	3628M
EM3207T-G	176	1,726	HV3	67	3628M
EM3211T	35	1,255	GO3	69	3630M
EM3211T-5	37	1,255	GO3	69	3630M
EM3211T-57	238	1,177	5O3	74	3630M
EM3211T-5BG	169	1,737	HV3	74	3630M
EM3211T-5G	177	1,737	HV3	74	3630M
EM3211T-8	37	1,413	GO3	71	3630M
EM3211T-8G	177	1,737	HV3	74	3630M
EM3211T-BG	169	1,737	HV3	74	3630M
EM3211T-G	176	1,737	HV3	72	3630M
EM3211TA	35	1,545	GO3	65	3632M
EM3212T	35	1,307	GO3	61	3622M
EM3212T-5	37	1,307	GO3	76	3634M
EM3212T-8	37	1,307	GO3	69	3622M
EM3212T-BG	169	1,632	HV3	63	3622M
EM3212T-G	176	1,632	HV3	63	3622M
EM3215T	35	1,433	GO3	79	3636M
EM3215T-G	176	1,757	HV3	79	3636M
EM3216T	34	1,963	GO3	65	3628M
EM3218T	35	1,375	GO3	84	3640M
EM3218T-5	37	1,375	GO3	82	3640M
EM3218T-57	238	1,303	5O3	101	3646M
EM3218T-5BG	169	1,872	HV3	92	3640M
EM3218T-5G	177	1,872	HV3	92	3640M
EM3218T-8	37	1,548	GO3	84	3640M
EM3218T-8G	177	1,872	HV3	92	3640M
EM3218T-BG	169	1,872	HV3	92	3640M
EM3218T-G	176	1,872	HV3	84	3640M
EM3218TA	35	1,680	GO3	84	3640M
EM3219T	35	2,073	GO3	74	3632M
EM3219T-5	37	2,073	GO3	92	3646M
EM3219T-8	37	2,073	GO3	77	3632M
EM3219T-BG	169	2,398	HV3	77	3632M
EM3219T-G	176	2,398	HV3	75	3632M
EM3220T	34	2,384	GO3	82	3642M
EM3303T	35	2,944	GO3	111	3744M
EM3305T	35	1,823	GO3	119	3734M
EM3305T-BG	169	2,187	HV3	110	3734M
EM3305T-G	176	2,187	HV3	110	3734M
EM3309T	35	2,389	GO3	139	3744M
EM3309T-BG	169	2,753	HV3	141	3744M
EM3309T-G	176	2,753	HV3	141	3744M
EM3311T	35	2,019	GO3	115	3734M
EM3311T-5	37	2,019	GO3	114	3734M
EM3311T-58	238	1,841	5O3	127	3736M
EM3311T-5BG	169	2,638	HV3	120	3734M
EM3311T-5G	177	2,638	HV3	114	3734M
EM3311T-8	37	2,274	GO3	114	3734M
EM3311T-8G	177	2,638	HV3	120	3734M
EM3311T-BG	169	2,638	HV3	115	3734M
EM3311T-G	176	2,638	HV3	115	3734M
EM3312T	35	2,371	GO3	121	3728M
EM3312T-8	37	2,371	GO3	121	3728M
EM3312T-BG	169	2,735	HV3	121	3728M
EM3312T-G	176	2,735	HV3	113	3728M
EM3313T	35	2,444	GO3	128	3742M
EM3313T-5	37	2,444	GO3	123	3740M
EM3313T-58	238	3,002	5O3	165	3752M
EM3313T-5BG	169	3,117	HV3	132	3740M
EM3313T-5G	177	3,117	HV3	132	3740M
EM3313T-8	37	2,753	GO3	129	3740M
EM3313T-8G	177	3,117	HV3	132	3740M
EM3313T-BG	169	3,117	HV3	129	3742M
EM3313T-G	176	3,117	HV3	148	3742M
EM3314T	35	3,367	GO3	124	3734M
EM3314T-8	37	3,367	GO3	131	3734M
EM3314T-BG	169	3,731	HV3	131	3734M
EM3314T-G	176	3,731	HV3	126	3734M
EM3538	23	965	GE3	29	3514M
EM3545	24	1,056	GE3	37	3516M
EM3545-5	26	1,056	GE3	27	3516M
EM3545-57	238	1,029	5E3	35	3516M
EM3545-G	172	1,311	HV3	32	3516M
EM3546	24	1,079	GE3	35	3520M
EM3546-5	26	1,079	GE3	38	3520M
EM3546T	24	1,079	GE3	35	3520M
EM3546T-5	26	1,079	GE3	34	3520M
EM3546T-57	238	1,052	5E3	34	3518M
EM3546T-5G	173	1,436	HV3	35	3520M
EM3546T-8	26	1,215	GE3	35	3520M
EM3546T-BG	167	1,436	HV3	38	3520M
EM3546T-G	172	1,436	HV3	30	3520M
EM3550	24	1,195	GE3	35	3520M
EM3550T	24	1,195	GE3	36	3520M
EM3550T-5	27	1,195	GE3	36	3520M
EM3550T-57	238	1,194	5E3	43	3524M
EM3550T-G	172	1,469	HV3	36	3520M
EM3554	24	1,199	GE3	40	3526M
EM3554-5	27	1,199	GE3	41	3526M
EM3554T	24	1,199	GE3	41	3526M
EM3554T-5	27	1,199	GE3	42	3526M
EM3554T-57	238	1,070	5E3	41	3526M
EM3554T-5G	173	1,482	HV3	42	3526M
EM3554T-8	26	1,350	GE3	43	3526M
EM3554T-BG	167	1,482	HV3	41	3526M
EM3554T-G	172	1,482	HV3	42	3526M
EM3555	24	1,309	GE3	42	3526M
EM3555-5	27	1,309	GE3	41	3526M
EM3555T	24	1,309	GE3	43	3526M
EM3555T-5	27	1,309	GE3	43	3526M
EM3555T-57	238	1,311	5E3	50	3532M
EM3555T-BG	167	1,582	HV3	41	3526M

(1) Shipping weight (lbs.) is approximate.

Index

Catalog Number	Page Number	List Price	Disc. Sym.	Ship Wgt(1)	Type Code
EM3555T-G	172	1,582	HV3	46	3526M
EM3556	24	1,393	GE3	42	3526M
EM3556-5	26	1,393	GE3	41	3526M
EM3556T	24	1,393	GE3	42	3526M
EM3556T-5	26	1,393	GE3	40	3526M
EM3556T-G	172	1,666	HV3	43	3526M
EM3558	24	1,268	GE3	46	3528M
EM3558-5	27	1,268	GE3	45	3528M
EM3558T	24	1,268	GE3	45	3528M
EM3558T-5	27	1,268	GE3	46	3528M
EM3558T-57	238	1,130	5E3	45	3528M
EM3558T-5G	173	1,526	HV3	46	3528M
EM3558T-8	26	1,428	GE3	46	3528M
EM3558T-9	65	1,267	SDQ	45	3528M
EM3558T-BG	167	1,526	HV3	45	3528M
EM3558T-G	172	1,526	HV3	42	3528M
EM3559	24	1,434	GE3	50	3532M
EM3559-5	27	1,434	GE3	50	3532M
EM3559T	24	1,434	GE3	49	3532M
EM3559T-5	27	1,434	GE3	60	3532M
EM3559T-BG	167	1,708	HV3	50	3532M
EM3559T-G	172	1,708	HV3	53	3532M
EM3581T	24	1,503	GE3	51	0518M
EM3581T-BG	167	1,754	HV3	55	0518M
EM3581T-G	172	1,754	HV3	55	0518M
EM3582T	24	1,685	GE3	56	0524M
EM3582T-BG	167	1,935	HV3	56	0524M
EM3582T-G	172	1,935	HV3	56	0524M
EM3583T	24	1,591	GE3	52	0520M
EM3583T-BG	167	1,841	HV3	56	0520M
EM3583T-G	172	1,841	HV3	56	0520M
EM3584T	24	1,559	GE3	57	0526M
EM3584T-BG	167	1,810	HV3	61	0526M
EM3584T-G	172	1,810	HV3	61	0526M
EM3586T	24	1,670	GE3	59	0526M
EM3586T-BG	167	1,920	HV3	62	0526M
EM3586T-G	172	1,920	HV3	62	0526M
EM3587T	24	1,635	GE3	58	0528M
EM3587T-BG	167	1,885	HV3	62	0528M
EM3587T-G	172	1,885	HV3	62	0528M
EM3603	209	1,788	DPL	38	3520M
EM3604	209	2,279	DPL	41	3526M
EM3606	209	1,821	DPL	41	3526M
EM3607	209	2,435	DPL	72	3632M
EM3607T	24	1,629	GE3	73	3632M
EM3607T-5	27	1,629	GE3	73	3632M
EM3607T-G	172	1,953	HV3	76	3632M
EM3609	209	1,922	DPL	45	3528M
EM3610	209	1,923	DPL	50	3532M
EM3610T	24	1,452	GE3	50	3532M
EM3610T-5	27	1,452	GE3	56	3532M
EM3610T-57	238	1,671	5E3	55	3534M
EM3610T-G	172	1,777	HV3	57	3532M
EM3611	209	2,001	DPL	70	3632M
EM3611T	24	1,301	GE3	73	3632M
EM3611T-5	27	1,301	GE3	73	3632M
EM3611T-57	238	1,326	5E3	70	3632M
EM3611T-5G	173	1,708	HV3	76	3632M
EM3611T-8	26	1,466	GE3	72	3632M
EM3611T-9	65	1,485	SDQ	83	3636M
EM3611T-BG	167	1,708	HV3	70	3632M
EM3611T-G	172	1,708	HV3	74	3632M
EM3613T	24	1,610	GE3	75	3630M
EM3613T-5	27	1,610	GE3	75	3630M
EM3613T-57	238	1,922	5E3	93	3642M
EM3613T-BG	167	1,935	HV3	74	3630M
EM3613T-G	172	1,935	HV3	76	3630M
EM3614T	24	1,708	GE3	93	3644M
EM3614T-5	27	1,708	GE3	90	3644M
EM3614T-G	172	2,032	HV3	94	3644M
EM3615T	24	1,344	GE3	93	3642M
EM3615T-5	27	1,344	GE3	89	3642M
EM3615T-57	238	1,531	5E3	101	3646M
EM3615T-5G	173	1,838	HV3	84	3642M
EM3615T-8	26	1,513	GE3	93	3642M
EM3615T-9	65	1,613	SDQ	95	3644M
EM3615T-BG	167	1,838	HV3	93	3642M
EM3615T-G	172	1,838	HV3	92	3642M
EM3616T	24	2,124	GE3	98	3646M
EM3616T-5	27	2,124	GE3	98	3646M
EM3617T	24	2,294	GE3	65	3628M
EM3618T	24	2,717	GE3	82	3646M
EM3660T	24	1,805	GE3	84	0618M
EM3660T-8	26	1,805	GE3	82	0618M
EM3660T-BG	167	2,075	HV3	58	0618M
EM3660T-G	172	2,075	HV3	58	0618M
EM3661T	24	1,856	GE3	97	0632M
EM3661T-5	27	1,856	GE3	97	0632M
EM3661T-8	26	1,856	GE3	96	0632M
EM3661T-BG	167	2,126	HV3	105	0632M
EM3661T-G	172	2,126	HV3	105	0632M
EM3663T	24	2,221	GE3	99	0628M
EM3663T-8	26	2,221	GE3	99	0628M
EM3663T-BG	167	2,491	HV3	99	0628M
EM3663T-G	172	2,491	HV3	99	0628M
EM3664T	24	2,037	GE3	109	0642M
EM3664T-BG	167	2,307	HV3	123	0642M
EM3664T-G	172	2,307	HV3	123	0642M
EM3665T	24	1,899	GE3	107	0642M
EM3665T-5	27	1,899	GE3	108	0642M
EM3665T-8	26	1,899	GE3	108	0642M
EM3665T-8G	173	2,223	HV3	119	0642M
EM3665T-BG	167	2,169	HV3	115	0642M
EM3665T-G	172	2,169	HV3	115	0642M
EM3667T	24	2,004	GE3	93	0630M
EM3667T-BG	167	2,274	HV3	99	0630M
EM3667T-G	172	2,274	HV3	99	0630M
EM3702	209	4,286	DPL	111	3744M
EM3702T	24	3,440	GE3	110	3732M
EM3703	209	2,353	DPL	70	3632M
EM3704	209	2,895	DPL	132	3738M
EM3704T	24	2,221	GE3	134	3738M
EM3704T-5	27	2,221	GE3	129	3738M
EM3704T-BG	167	2,585	HV3	132	3738M
EM3704T-G	172	2,585	HV3	135	3738M
EM3705T	24	3,759	GE3	111	3744M
EM3706	209	3,272	DPL	74	3630M
EM3707	209	2,964	DPL	93	3642M
EM3708T	24	2,510	GE3	154	3752M
EM3708T-5	27	2,510	GE3	154	3752M
EM3708T-BG	167	2,873	HV3	154	3752M
EM3708T-G	172	2,873	HV3	154	3752M
EM3709	209	3,300	DPL	96	3646M
EM3709T	24	2,412	GE3	116	3728M
EM3709T-5	27	2,412	GE3	115	3728M
EM3709T-58	238	2,666	5E3	121	3728M
EM3709T-BG	167	2,776	HV3	121	3728M
EM3709T-G	172	2,776	HV3	133	3728M
EM3710T	24	1,938	GE3	184	3738M
EM3710T-5	27	1,938	GE3	123	3738M
EM3710T-58	238	2,124	5E3	127	3736M
EM3710T-5G	173	2,547	HV3	126	3738M
EM3710T-8	26	2,183	GE3	127	3738M
EM3710T-9	65	2,180	SDQ	140	3744M
EM3710T-BG	167	2,547	HV3	127	3738M
EM3710T-G	172	2,547	HV3	151	3738M
EM3711T	24	2,445	GE3	120	3730M
EM3711T-5	27	2,445	GE3	119	3728M

(1) Shipping weight (lbs.) is approximate.

Index

Catalog Number	Page Number	List Price	Disc. Sym.	Ship Wgt(1)	Type Code
EM3711T-58	238	2,827	5E3	140	3740M
EM3711T-BG	167	2,809	HV3	118	3730M
EM3711T-G	173	2,809	HV3	118	3730M
EM3712	209	2,752	DPL	97	3644M
EM3713T	25	3,450	GE3	172	3752M
EM3713T-5	27	3,450	GE3	169	3752M
EM3714T	24	2,188	GE3	162	3752M
EM3714T-5	27	2,188	GE3	165	3752M
EM3714T-58	238	2,687	5E3	165	3752M
EM3714T-5G	173	2,829	HV3	165	3752M
EM3714T-8	26	2,465	GE3	165	3752M
EM3714T-9	65	2,537	SDQ	187	3760M
EM3714T-BG	167	2,829	HV3	165	3752M
EM3714T-G	173	2,829	HV3	156	3752M
EM3764T	24	2,538	GE3	173	0736M
EM3764T-BG	167	2,826	HV3	211	0736M
EM3764T-G	172	2,826	HV3	211	0736M
EM3768T	24	2,944	GE3	195	0746M
EM3768T-BG	167	3,232	HV3	198	0746M
EM3768T-G	172	3,232	HV3	198	0746M
EM3769T	24	2,570	GE3	165	0724M
EM3769T-8	26	2,570	GE3	155	0724M
EM3769T-BG	167	3,232	HV3	169	0726M
EM3769T-G	172	3,232	HV3	169	0726M
EM3770T	24	2,477	GE3	170	0738M
EM3770T-5	27	2,477	GE3	170	0738M
EM3770T-8	26	2,477	GE3	170	0738M
EM3770T-8G	173	2,841	HV3	170	0738M
EM3770T-BG	167	3,135	HV3	193	0738M
EM3770T-G	172	3,168	HV3	193	0738M
EM3771T	24	3,013	GE3	182	0730M
EM3771T-8	26	3,013	GE3	182	0730M
EM3771T-BG	167	3,302	HV3	164	0730M
EM3771T-G	173	3,351	HV3	164	0730M
EM3774T	24	2,778	GE3	191	0748M
EM3774T-5	27	2,778	GE3	185	0748M
EM3774T-8	26	2,778	GE3	189	0748M
EM3774T-8G	173	3,142	HV3	231	0748M
EM3774T-BG	167	3,066	HV3	232	0748M
EM3774T-G	173	3,140	HV3	232	0748M
EM4100T	25	6,389	GE3	391	1046M
EM4100T-BG	168	6,881	HV3	372	1046M
EM4100T-G	173	7,010	HV3	369	1046M
EM4102T	25	8,507	GE3	399	1054M
EM4102T-BG	168	8,999	HV3	406	1054M
EM4102T-G	173	9,127	HV3	393	1054M
EM4103T	25	5,345	GE3	388	1054M
EM4103T-12	25	6,926	GE3	402	1054M
EM4103T-5	27	5,345	GE3	380	1056M
EM4103T-58	238	6,565	5E3	437	1056M
EM4103T-5G	173	6,643	HV3	364	1056M
EM4103T-8	26	6,022	GE3	382	1054M
EM4103T-BG	168	6,514	HV3	420	1054M
EM4103T-G	173	6,643	HV3	400	1054M
EM4104T	25	6,340	GE3	430	1056M
EM4104T-12	25	8,047	GE3	425	1056M
EM4104T-5	27	6,340	GE3	408	1056M
EM4104T-58	238	7,787	5E3	475	1064M
EM4104T-5G	173	7,764	HV3	423	1056M
EM4104T-8	26	7,143	GE3	413	1056M
EM4104T-BG	168	7,636	HV3	437	1056M
EM4104T-G	173	7,764	HV3	410	1056M
EM4106T	25	4,555	GE3	262	0936M
EM4106T-5	27	4,555	GE3	252	0936M
EM4106T-8	26	4,555	GE3	242	0936M
EM4106T-G	173	5,037	HV3	261	0936M
EM4107T	25	5,943	GE3	327	0944M
EM4107T-5	27	5,943	GE3	335	0946M
EM4107T-8	26	5,943	GE3	305	0944M
EM4107T-G	173	6,564	HV3	323	0944M
EM4108T	25	7,061	GE3	347	0950M
EM4108T-5	27	7,061	GE3	331	0950M
EM4108T-8	26	7,061	GE3	324	0948M
EM4108T-G	173	7,682	HV3	336	0950M
EM4109T	25	9,677	GE3	551	1058M
EM4109T-5	27	9,677	GE3	522	1240M
EM4109T-G	173	10,428	HV3	532	1058M
EM4110T	25	8,291	GE3	570	1254M
EM4110T-12	25	10,743	GE3	601	1260M
EM4110T-5	27	8,291	GE3	575	1254M
EM4110T-58	238	10,183	5E3	650	1272M
EM4110T-5G	173	10,092	HV3	576	1254M
EM4110T-8	26	9,342	GE3	576	1254M
EM4110T-BG	168	9,944	HV3	578	1254M
EM4110T-G	173	10,092	HV3	596	1254M
EM4111T	25	9,625	GE3	445	1072M
EM4111T-BG	168	10,227	HV3	475	1072M
EM4111T-G	173	10,376	HV3	507	1072M
EM4112T	25	12,111	GE3	534	1252M
EM4114T	25	10,586	GE3	575	1252M
EM4114T-5	27	10,586	GE3	574	1252M
EM4114T-G	173	11,337	HV3	584	1252M
EM4115T	25	9,058	GE3	650	1272M
EM4115T-12	25	11,609	GE3	652	1272M
EM4115T-5	27	9,058	GE3	623	1272M
EM4115T-58	238	11,127	5E3	800	1272M
EM4115T-5G	173	10,959	HV3	644	1272M
EM4115T-8	26	10,208	GE3	621	1266M
EM4115T-BG	168	10,810	HV3	641	1272M
EM4115T-G	173	10,959	HV3	648	1272M
EM4115TS	25	10,208	GE3	639	1272M
EM4116T	25	14,958	GE3	578	1256M
EM4117T	25	11,120	GE3	604	1264M
EM4117T-G	173	11,871	HV3	604	1264M
EM4118T	25	5,312	GE3	305	0944M
EM4308T	25	13,855	GE3	899	A36062M
EM4308T-G	173	15,139	HV3	883	A36062M
EM4310T	25	14,873	GE3	810	A36056M
EM4310T-G	173	16,208	HV3	900	A36056M
EM4312T	25	16,742	GE3	902	A36062M
EM4312T-G	173	18,171	HV3	910	A36062M
EM4313T	25	17,302	GE3	980	A36068M
EM4313T-G	173	18,759	HV3	966	A36068M
EM4314T	25	13,071	GE3	912	A3658M
EM4314T-12	25	16,890	GE3	850	A3658M
EM4314T-5	27	13,071	GE3	919	A3658M
EM4314T-58	238	16,009	5E3	910	A36070M
EM4314T-G	173	16,012	HV3	907	A3658M
EM4314TS	25	14,687	GE3	907	A3658M
EM4316T	25	15,284	GE3	955	A36070M
EM4316T-12	25	19,750	GE3	955	A36070M
EM4316T-5	27	15,284	GE3	958	A36070M
EM4316T-G	173	18,624	HV3	956	A36070M
EM4316TS	25	17,173	GE3	946	A36070M
EM4338T	25	16,635	GE3	813	A36050M
EM4348T	25	20,633	GE3	875	A36062M
EM4400T	25	18,927	GE3	1203	A40064M
EM4400T-12	25	24,527	GE3	1211	A40064M
EM4400T-5	27	18,927	GE3	1208	A40064M
EM4400T-G	173	23,304	HV3	1214	A40064M
EM4400TS	25	21,328	GE3	1206	A40064M
EM4402T-4	25	22,121	GE3	1187	A40060M
EM4403T	25	20,322	GE3	1187	A40064M
EM4404T	25	23,664	GE3	1229	A40064M
EM4406T-4	25	26,951	GE3	1826	A4488M
EM4406T-5	27	26,951	GE3	2151	A4488M
EM4406T-5E	27	26,951	GE3	1770	A44078M
EM4406TR-4	25	32,392	GE3	1826	A4488M

(1) Shipping weight (lbs.) is approximate.

Index

Catalog Number	Page Number	List Price	Disc. Sym.	Ship Wgt(1)	Type Code
EM4406TS-4	25	30,369	GE3	2071	A4488M
EM4407T-4	26	38,069	GE3	2497	A44120M
EM4407TR-4	26	40,091	GE3	2531	A44120M
EM4407TS-4	26	38,069	GE3	2487	A44120M
EM4408T-4	26	49,922	GE3	2888	A44144M
EM4408TR-4	26	51,944	GE3	2888	A44144M
EM4408TS-4	26	49,922	GE3	2888	A44144M
EM4409T-4	25	28,561	GE3	1828	A44064M
EM4410T-4	25	23,541	GE3	1969	A44076M
EM4410T-5	27	23,429	GE3	1669	A44076M
EM4410T-5E	27	26,401	GE3	1626	A44062M
EM4410TR-4	25	28,423	GE3	1988	A44076M
EM4410TS-4	25	26,401	GE3	2001	A44076M
EM4411T-4	25	33,600	GE3	2073	A44090M
EM4412T-4	25	27,343	GE3	1901	A4468M
EM4413T-4	25	32,173	GE3	1995	A4478M
EM44156T-4	25	38,486	GE3	2571	A44120M
EM4416T-4	26	38,558	GE3	2355	A44104M
EM44206T-4	26	47,483	GE3	3017	A44160M
EM44252T-4	26	60,041	GE3	2595	A44128M
EM44256T-4	26	69,422	GE3	3125	A44160M
EM44302T-4	26	87,107	GE3	2595	A44128M
EM44304T-4	26	68,590	GE3	2888	A44144M
EM44304TS-4	26	68,590	GE3	2888	A44144M
EM44306T-4	26	82,360	GE3	3683	A44208M
EM44352T-4	26	104,553	GE3	2855	A44144M
EM44354T-4	26	82,564	GE3	3027	A44160M
EM44354TS-4	26	82,564	GE3	3027	A44160M
EM44402T-4	26	122,319	GE3	3700	A44208M
EM44404T-4	26	102,800	GE3	3680	A44208M
EM4458T	25	25,336	GE3	1216	A40060M
EM4468T	25	29,260	GE3	1216	A40060M
EM5001A07SP	309	–	SS	1	–
EM5001A08SP	309	–	SS	1	–
EM5001GW	309	–	SS	2	–
EMM08112-S-AP	223	721	IPP	23	–
EMM08112-S-PP	226	806	IPP	42	–
EMM08256-S-PP	226	641	IPP	31	–
EMM08376-S-PP	226	709	IPP	35	–
EMM08554-S-PP	226	655	IPP	44	–
EMM08556-S-PP	226	806	IPP	46	–
EMM08752-S-AP	223	663	IPP	21	–
EMM08752-S-PP	226	741	IPP	40	–
EMM08754-S-AP	223	690	IPP	30	–
EMM08754-S-PP	226	770	IPP	49	–
EMM09114-S-AP	223	786	IPP	42	–
EMM09114-S-PP	226	878	IPP	73	–
EMM09152-S-AP	223	860	IPP	37	–
EMM09152-S-PP	226	961	IPP	68	–
EMM09154-S-AP	223	924	IPP	42	–
EMM09154-S-PP	226	1,032	IPP	75	–
EMM09222-S-AP	223	1,082	IPP	44	–
EMM09222-S-PP	226	1,209	IPP	77	–
EMM09756-S-AP	223	869	IPP	42	–
EMM09756-S-PP	226	972	IPP	75	–
EMM10032-S-AP	223	1,282	IPP	62	–
EMM10032-S-PP	226	1,432	IPP	110	–
EMM10034-S-AP	223	1,347	IPP	79	–
EMM10034-S-PP	226	1,504	IPP	108	–
EMM10116-S-AP	223	1,066	IPP	78	–
EMM10116-S-PP	226	1,191	IPP	104	–
EMM10156-S-AP	223	1,220	IPP	77	–
EMM10224-S-AP	223	1,134	IPP	79	–
EMM10224-S-PP	226	1,267	IPP	108	–
EMM11042-S-AP	223	1,530	IPP	84	–
EMM11042-S-PP	226	1,709	IPP	123	–
EMM11044-S-AP	223	1,600	IPP	97	–
EMM11044-S-PP	226	1,788	IPP	115	–
EMM11156-S-PP	226	1,363	IPP	117	–

Catalog Number	Page Number	List Price	Disc. Sym.	Ship Wgt(1)	Type Code
EMM11226-S-AP	223	1,534	IPP	95	–
EMM13036-S-AP	223	1,698	IPP	145	–
EMM13036-S-PP	226	2,131	IPP	181	–
EMM13046-S-AP	223	2,114	IPP	148	–
EMM13046-S-PP	226	2,652	IPP	181	–
EMM13226-S-PP	226	1,713	IPP	179	–
EMM13552-D-PP	226	2,227	IPP	170	–
EMM13552-S-AP	223	1,776	IPP	128	–
EMM13554-D-PP	226	2,296	IPP	179	–
EMM13554-S-AP	223	1,830	IPP	150	–
EMM13556-D-PP	226	3,278	IPP	174	–
EMM13556-S-AP	223	2,613	IPP	139	–
EMM13752-D-PP	226	2,774	IPP	170	–
EMM13752-S-AP	223	2,212	IPP	139	–
EMM13754-D-PP	226	2,897	IPP	179	–
EMM13754-S-AP	223	2,309	IPP	150	–
EMM16112-D-PPN	227	3,505	IPP	311	–
EMM16112-S-AP	224	2,542	IPP	234	–
EMM16114-D-PPN	227	3,252	IPP	382	–
EMM16114-S-AP	224	2,593	IPP	277	–
EMM16116-S-AP	224	3,758	IPP	306	–
EMM16152-D-PPN	227	4,533	IPP	375	–
EMM16152-S-AP	224	3,299	IPP	271	–
EMM16154-D-PPN	227	4,187	IPP	413	–
EMM16154-S-AP	224	3,356	IPP	308	–
EMM16182-D-PPN	227	5,005	IPP	403	–
EMM16182-S-AP	224	3,959	IPP	403	–
EMM16756-S-AP	223	2,754	IPP	480	–
EMM18156-S-AP	224	4,675	IPP	385	–
EMM18184-D-PPN	227	4,775	IPP	519	–
EMM18184-S-AP	224	4,188	IPP	389	–
EMM18222-D-PPN	227	5,593	IPP	516	–
EMM18222-S-AP	224	4,904	IPP	387	–
EMM18224-D-PPN	227	5,725	IPP	519	–
EMM18224-S-AP	224	4,561	IPP	387	–
EMM20186-S-AP	224	6,109	IPP	480	–
EMM20226-S-AP	224	6,568	IPP	539	–
EMM20302-D-PPN	227	7,000	IPP	657	–
EMM20302-S-AP	224	6,138	IPP	496	–
EMM20304-D-PPN	227	7,262	IPP	703	–
EMM20304-S-AP	224	6,368	IPP	387	–
EMM20372-D-PPN	227	9,224	IPP	692	–
EMM20372-S-AP	224	8,090	IPP	531	–
EMM22306-S-AP	224	8,950	IPP	683	–
EMM22374-D-PPN	227	8,865	IPP	877	–
EMM22374-S-AP	224	7,774	IPP	694	–
EMM22452-D-PPN	227	11,057	IPP	692	–
EMM22452-S-AP	224	9,695	IPP	719	–
EMM22454-D-PPN	227	10,697	IPP	877	–
EMM22454-S-AP	224	8,520	IPP	696	–
EMM2333	234	3,932	BIM	250	0944M
EMM2334	234	4,774	BIM	313	0960M
EMM25376-S-AP	224	11,760	IPP	809	–
EMM25552-D-PPN	227	13,412	IPP	997	–
EMM25552-S-AP	224	11,760	IPP	773	–
EMM25554-D-PPN	227	12,920	IPP	1049	–
EMM25554-S-AP	224	11,330	IPP	828	–
EMM28752-D-PP	227	20,113	IPP	1466	–
EMM28754-D-PP	227	19,429	IPP	1466	–
EMM28902-D-PP	227	24,143	IPP	1598	–
EMM28904-D-PP	227	22,704	IPP	1598	–
EMM3554	234	1,359	BIM	44	3526M
EMM3558	234	1,386	BIM	45	3528M
EMM3559	234	1,561	BIM	51	3532M
EMM3611	234	1,556	BIM	71	3632M
EMM3613	234	1,581	BIM	78	3634M
EMM3615	234	1,689	BIM	90	3642M
EMM3709	234	2,386	BIM	118	3728M
EMM3710	234	2,417	BIM	151	3738M

(1) Shipping weight (lbs.) is approximate.

Index

Catalog Number	Page Number	List Price	Disc. Sym.	Ship Wgt(1)	Type Code
EMM3711	234	2,500	BIM	119	3730M
EMM3714	234	2,733	BIM	165	3752M
EMVM08112C-S-AP	225	815	IPP	23	–
EMVM08112C-S-PP	228	910	IPP	42	–
EMVM08112D-S-AP	224	815	IPP	23	–
EMVM08112D-S-PP	227	910	IPP	42	–
EMVM08256C-S-PP	228	745	IPP	31	–
EMVM08256D-S-PP	227	745	IPP	31	–
EMVM08376C-S-PP	228	806	IPP	35	–
EMVM08376D-S-PP	227	806	IPP	35	–
EMVM08554C-S-PP	228	766	IPP	44	–
EMVM08554D-S-PP	227	766	IPP	44	–
EMVM08556C-S-PP	228	910	IPP	46	–
EMVM08556D-S-PP	227	910	IPP	46	–
EMVM08752C-S-AP	225	760	IPP	21	–
EMVM08752C-S-PP	228	849	IPP	40	–
EMVM08752D-S-AP	224	760	IPP	21	–
EMVM08752D-S-PP	227	849	IPP	40	–
EMVM08754C-S-AP	225	772	IPP	30	–
EMVM08754C-S-PP	228	864	IPP	49	–
EMVM08754D-S-AP	224	772	IPP	30	–
EMVM08754D-S-PP	227	864	IPP	49	–
EMVM09114C-S-AP	225	885	IPP	42	–
EMVM09114C-S-PP	228	989	IPP	73	–
EMVM09114D-S-AP	224	885	IPP	42	–
EMVM09114D-S-PP	227	989	IPP	73	–
EMVM09152C-S-AP	225	959	IPP	37	–
EMVM09152C-S-PP	228	1,072	IPP	68	–
EMVM09152D-S-AP	224	959	IPP	37	–
EMVM09152D-S-PP	227	1,072	IPP	68	–
EMVM09154C-S-AP	225	1,060	IPP	42	–
EMVM09154C-S-PP	228	1,184	IPP	75	–
EMVM09154D-S-AP	224	1,060	IPP	42	–
EMVM09154D-S-PP	227	1,184	IPP	75	–
EMVM09222C-S-AP	225	1,189	IPP	44	–
EMVM09222C-S-PP	228	1,328	IPP	77	–
EMVM09222D-S-AP	224	1,189	IPP	44	–
EMVM09222D-S-PP	227	1,328	IPP	77	–
EMVM09756C-S-AP	225	951	IPP	42	–
EMVM09756C-S-PP	228	1,061	IPP	75	–
EMVM09756D-S-AP	224	951	IPP	42	–
EMVM09756D-S-PP	227	1,061	IPP	75	–
EMVM10032C-S-AP	225	1,411	IPP	62	–
EMVM10032C-S-PP	228	1,576	IPP	110	–
EMVM10032D-S-AP	224	1,411	IPP	62	–
EMVM10032D-S-PP	227	1,576	IPP	110	–
EMVM10034C-S-AP	225	1,501	IPP	79	–
EMVM10034C-S-PP	228	1,677	IPP	108	–
EMVM10034D-S-AP	224	1,501	IPP	79	–
EMVM10034D-S-PP	227	1,677	IPP	108	–
EMVM10116C-S-AP	225	1,137	IPP	77	–
EMVM10116C-S-PP	228	1,270	IPP	104	–
EMVM10116D-S-AP	224	1,137	IPP	77	–
EMVM10116D-S-PP	227	1,270	IPP	104	–
EMVM10156C-S-AP	225	1,320	IPP	77	–
EMVM10156D-S-AP	224	1,320	IPP	77	–
EMVM10224C-S-AP	225	1,259	IPP	79	–
EMVM10224C-S-PP	228	1,407	IPP	108	–
EMVM10224D-S-AP	224	1,259	IPP	79	–
EMVM10224D-S-PP	227	1,407	IPP	108	–
EMVM11042C-S-AP	225	1,688	IPP	84	–
EMVM11042C-S-PP	228	1,886	IPP	123	–
EMVM11042D-S-AP	224	1,688	IPP	84	–
EMVM11042D-S-PP	227	1,886	IPP	123	–
EMVM11044C-S-AP	225	1,752	IPP	97	–
EMVM11044C-S-PP	228	1,957	IPP	115	–
EMVM11044D-S-AP	224	1,752	IPP	97	–
EMVM11044D-S-PP	227	1,957	IPP	115	–
EMVM11156C-S-PP	228	1,475	IPP	117	–
EMVM11156D-S-PP	227	1,475	IPP	117	–
EMVM11226C-S-AP	225	1,633	IPP	95	–
EMVM11226D-S-AP	224	1,633	IPP	95	–
EMVM13036C-S-AP	225	2,052	IPP	145	–
EMVM13036C-S-PP	228	2,292	IPP	181	–
EMVM13036D-S-AP	224	2,052	IPP	145	–
EMVM13036D-S-PP	227	2,292	IPP	181	–
EMVM13046C-S-AP	225	2,220	IPP	148	–
EMVM13046C-S-PP	228	2,785	IPP	181	–
EMVM13046D-S-AP	224	2,220	IPP	148	–
EMVM13046D-S-PP	227	2,785	IPP	181	–
EMVM13226C-S-PP	228	1,825	IPP	179	–
EMVM13226D-S-PP	227	1,825	IPP	179	–
EMVM13552C-D-PP	228	2,458	IPP	170	–
EMVM13552C-S-AP	225	1,959	IPP	128	–
EMVM13552D-D-PP	227	2,458	IPP	170	–
EMVM13552D-S-AP	224	1,959	IPP	128	–
EMVM13554C-D-PP	228	2,504	IPP	179	–
EMVM13554C-S-AP	225	1,996	IPP	150	–
EMVM13554D-D-PP	227	2,504	IPP	179	–
EMVM13554D-S-AP	224	1,996	IPP	150	–
EMVM13556C-D-PP	228	3,386	IPP	174	–
EMVM13556C-S-AP	225	2,699	IPP	139	–
EMVM13556D-D-PP	227	3,386	IPP	174	–
EMVM13556D-S-AP	224	2,699	IPP	139	–
EMVM13752C-D-PP	228	2,983	IPP	170	–
EMVM13752C-S-AP	225	2,378	IPP	139	–
EMVM13752D-D-PP	227	2,983	IPP	170	–
EMVM13752D-S-AP	224	2,378	IPP	139	–
EMVM13754C-D-PP	228	3,159	IPP	179	–
EMVM13754C-S-AP	225	2,518	IPP	150	–
EMVM13754D-D-PP	227	3,159	IPP	179	–
EMVM13754D-S-AP	224	2,518	IPP	150	–
EMVM3545D	235	1,359	BIM	27	3420M
EMVM3546C	236	1,375	BIM	38	3520M
EMVM3546D	235	1,401	BIM	38	3520M
EMVM3550D	235	1,421	BIM	38	3520M
EMVM3554D	235	1,421	BIM	41	3526M
EMVM3555D	235	1,540	BIM	41	3526M
EMVM3558C	236	1,466	BIM	45	3528M
EMVM3558D	235	1,498	BIM	45	3528M
EMVM3559C	236	1,637	BIM	50	3532M
EMVM3559D	235	1,668	BIM	50	3532M
EMVM3611C	236	1,762	BIM	70	3632M
EMVM3611D	235	1,790	BIM	89	3632M
EMVM3613C	236	2,157	BIM	81	3634M
EMVM3613D	235	2,183	BIM	81	3634M
EMVM3615C	236	2,011	BIM	93	3642M
EMVM3615D	235	2,042	BIM	93	3642M
EMVM3709D	235	2,987	BIM	96	3646M
EMVM3710D	235	2,765	BIM	151	3738M
EMVM3711D	235	3,623	BIM	118	3730M
EMVM3714D	235	3,395	BIM	165	3752M
ENC00NV	286	2,346	SVC	2	–
ENC00NV-A2	264	1,751	SVC	1	–
ENC00NV-B1	264	1,751	SVC	2	–
ENC00NV-D1	264	1,970	SVC	4	–
ENC00NV-D2	264	2,621	SVC	4	–
ENC01BC-B1	264	1,751	SVC	3	–
ENC01BC-D2	264	2,622	SVC	4	–
ENC01NV-A2	264	1,751	SVC	1	–
ENC01NV-B2	264	1,751	SVC	2	–
ENC01NV-D2	264	2,622	SVC	4	–
ENC02BC-A2	264	2,713	SVC	1	–
ENC02BC-B2	264	1,981	SVC	2	–
ENC02BC-D2	264	1,970	P50	4	–
ENCP3581T-4	51	1,709	SDM	56	0524M
ENCP83580T-4	57	1,562	SD8	56	0520M
ENCP83581T-4	57	1,709	SD8	60	0524M

(1) Shipping weight (lbs.) is approximate.

Index

Catalog Number	Page Number	List Price	Disc. Sym.	Ship Wgt(1)	Type Code
ENM3546	24	1,215	GE3	39	3524M
ENM3546T	24	1,215	GE3	39	3524M
ENM3554T	24	1,350	GE3	50	3534M
EPCL1322M	208	1,619	DPS	66	3546LC
ERHM3162TA	189	1,874	HV3	60	3540M
ERL1203A	188	514	HV1	20	3411LC
ERL1206A	188	568	HV1	0	–
ERL1306A	188	756	HV1	26	3428LC
ERL1309A	188	869	HV1	36	3524LC
ERL1313A	188	1,135	HV1	52	3532LC
ERL1319A	188	1,275	HV1	59	3540LC
ERL1319A277	188	1,275	HV1	59	3540LC
ERM3003	188	720	HV3	21	3413M
ERM3007	188	749	HV3	24	3416M
ERM3009	188	790	HV3	24	3416M
ERM3010	188	805	HV3	31	3424M
ERM3104	188	749	HV3	24	3416M
ERM3108	188	805	HV3	31	3424M
ERM3111	188	799	HV3	24	3416M
ERM3112	188	888	HV3	38	3516M
ERM3115	188	843	HV3	27	3420M
ERM3116	188	925	HV3	37	3520M
ERM3120	188	894	HV3	34	3518M
ERM3154	188	955	HV3	41	3526M
ERM3155	188	1,037	HV3	43	3524M
ERM3157	188	1,108	HV3	43	3526M
ERM3158TA	189	1,312	HV3	48	3530M
EWCM3212T	150	1,691	PC3	63	3622M
EWCM3219T	150	2,457	PC3	77	3632M
EWCM3312T	150	2,864	PC3	121	3728M
EWCM3314T	150	3,860	PC3	131	3734M
EWCM3709T	147	2,905	PC3	96	3646M
EWCM3710T	147	2,676	PC3	129	3738M
EWCM3711T	147	2,938	PC3	118	3730M
EWCM3713T	147	3,942	PC3	169	3752M
EWCM3714T	147	2,957	PC3	187	3756M
EWDM2280T	108	8,375	WDW	256	0940M
EWDM22976T	98	6,050	WDW	265	3954M
EWDM23932T	98	6,939	WDW	276	3956M
EWDM23933T	98	8,228	WDW	248	3942M
EWDM23934T	98	9,589	WDW	269	3952M
EWDM2395T	108	13,498	WDW	469	1060M
EWDM23994T	98	8,365	WDW	169	3756M
EWDM2401T	108	9,080	WDW	320	0960M
EWDM2402T	108	10,112	WDW	391	1046M
EWDM3545T	98	1,447	WDW	35	3516M
EWDM3546	98	1,490	WDW	39	3524M
EWDM3546T	98	1,526	WDW	39	3524M
EWDM3550T	98	1,495	WDW	48	3528M
EWDM3554T	98	1,678	WDW	49	3534M
EWDM3555T	98	1,885	WDW	50	3532M
EWDM3556T	98	1,754	WDW	41	3526M
EWDM3558T	98	1,969	WDW	46	3528M
EWDM3607T	98	1,940	WDW	91	3632M
EWDM3610T	98	2,053	WDW	50	3532M
EWDM3611T	98	2,458	WDW	73	3632M
EWDM3613T	98	2,962	WDW	74	3630M
EWDM3614T	98	2,174	WDW	100	3644M
EWDM3615T	98	2,798	WDW	90	3642M
EWDM3617T	98	2,890	WDW	65	3628M
EWDM3618T	98	3,395	WDW	95	3646M
EWDM3702T	98	4,746	WDW	111	3744M
EWDM3704T	98	2,819	WDW	139	3738M
EWDM3705T	98	5,243	WDW	111	3744M
EWDM3708T	98	3,188	WDW	185	3752M
EWDM3709T	98	4,146	WDW	129	3728M
EWDM3710T	98	3,502	WDW	151	3738M
EWDM3711T	98	4,387	WDW	123	3730M
EWDM3714T	98	3,815	WDW	165	3752M

Catalog Number	Page Number	List Price	Disc. Sym.	Ship Wgt(1)	Type Code
EWDM4100T	108	7,361	WDW	391	1046M
EWDM4102T	108	10,000	WDW	429	1056M
EWDM4103T	108	6,788	WDW	437	1054M
EWDM4104T	108	7,909	WDW	437	1056M
EWDM4107T	108	7,082	WDW	265	0944M
EWDM4108T	108	8,633	WDW	299	0950M
EWDM4109T	108	11,859	WDW	470	1058M
EWDM4110T	108	10,346	WDW	601	1254M
EWDM4111T	108	10,450	WDW	605	1260M
EWDM4112T	108	15,388	WDW	578	1256M
EWDM4114T	108	12,427	WDW	575	1252M
EWDM4115T	108	12,144	WDW	700	1272M
EWDM4116T	108	19,217	WDW	578	1256M
EWDM4117T	108	13,471	WDW	649	1264M
EWDM41906T	98	9,643	WDW	242	3940M
EWDM4308T	108	17,588	WDW	910	A36062M
EWDM4310T	108	18,894	WDW	999	A36056M
EWDM4312T	108	18,734	WDW	910	A36062M
EWDM4313T	108	20,354	WDW	1005	A36068M
EWDM4314T	108	17,827	WDW	961	A3658M
EWDM4316T	108	19,381	WDW	965	A36070M
EWDM4338T	108	20,320	WDW	806	A36050M
EWDM4348T	108	23,365	WDW	910	A36062M
EWDM4403T	108	25,591	WDW	1322	A40064M
EWDM4404T	108	31,143	WDW	1322	A40064M
EWDM4419T	108	41,689	WDW	1815	A44072M
EWDM4458T	108	31,534	WDW	1216	A40060M
EWDM4468T	108	33,765	WDW	1216	A40060M
FCD34	300	114	SVC	1	–
FCD34TEFC	300	134	SVC	1	–
FCD35	300	30	SVC	1	–
FCD35M	300	114	SVC	6	–
FCD35TEFC	300	182	SVC	1	–
FCD36	300	139	SVC	2	–
FCD36TEFC	300	196	SVC	2	–
FCD37	300	168	SVC	3	–
FCD37TEFC	300	200	SVC	2	–
FCD39	300	225	SVC	3	–
FCD40	300	334	SVC	3	–
FCD42	300	334	SVC	5	–
FDAOL3504A	196	799	FD1	32	3424LC
FDAOL3507A	196	873	FD1	35	3428LC
FDAOL3521A	196	947	FD1	39	3524LC
FDAOL3532A	196	1,115	FD1	50	3532LC
FDEM2333T	193	4,057	FD3	270	0944M
FDEM2333T-5	194	4,057	FD3	268	0944M
FDEM2334T	193	4,904	FD3	300	0960M
FDEM2334T-5	194	4,904	FD3	322	0960M
FDEM2394T	193	4,426	FD3	254	0930M
FDEM2394T-5	194	4,426	FD3	239	0934M
FDEM3546	193	1,243	FD3	38	3520M
FDEM3546-5	194	1,243	FD3	37	3520M
FDEM3546T	193	1,260	FD3	38	3520M
FDEM3546T-5	194	1,260	FD3	37	3520M
FDEM3554	193	1,271	FD3	41	3526M
FDEM3554-5	194	1,271	FD3	41	3526M
FDEM3554T	193	1,296	FD3	41	3526M
FDEM3554T-5	194	1,296	FD3	41	3526M
FDEM3558	193	1,303	FD3	45	3528M
FDEM3558-5	194	1,303	FD3	45	3528M
FDEM3558T	193	1,342	FD3	45	3528M
FDEM3558T-5	194	1,342	FD3	45	3528M
FDEM3610T	193	1,541	FD3	64	3540M
FDEM3610T-5	194	1,541	FD3	50	3532M
FDEM3611T	193	1,487	FD3	70	3632M
FDEM3611T-5	194	1,487	FD3	73	3632M
FDEM3613T	193	1,726	FD3	74	3630M
FDEM3613T-5	194	1,726	FD3	74	3630M
FDEM3615T	193	1,624	FD3	93	3642M

(1) Shipping weight (lbs.) is approximate.

Index

Catalog Number	Page Number	List Price	Disc. Sym.	Ship Wgt(1)	Type Code
FDEM3615T-5	194	1,624	FD3	93	3642M
FDEM3709T	193	2,577	FD3	121	3728M
FDEM3709T-5	194	2,577	FD3	121	3728M
FDEM3710T	193	2,337	FD3	127	3738M
FDEM3710T-5	194	2,337	FD3	129	3738M
FDEM3711T	193	2,612	FD3	118	3730M
FDEM3711T-5	194	2,612	FD3	121	3728M
FDEM3714T	193	2,633	FD3	165	3752M
FDEM3714T-5	194	2,633	FD3	165	3752M
FDEM4103T	193	6,410	FD3	380	1054M
FDEM4103T-5	194	6,410	FD3	447	1054M
FDEM4104T	193	7,588	FD3	425	1056M
FDEM4104T-5	194	7,588	FD3	461	1056M
FDEM4106T	193	4,853	FD3	271	0936M
FDEM4106T-5	194	4,853	FD3	229	0936M
FDEM4107T	193	6,326	FD3	323	0944M
FDEM4107T-5	194	6,326	FD3	317	0946M
FDEM4108T	193	7,501	FD3	323	0950M
FDEM4108T-5	194	7,501	FD3	317	0950M
FDEM4109T	193	10,334	FD3	528	1058M
FDEM4109T-5	194	10,334	FD3	553	1240M
FDEM4110T	193	9,982	FD3	567	1254M
FDEM4110T-5	194	9,982	FD3	605	1254M
FDEM4114T	193	11,290	FD3	575	1252M
FDEM4114T-5	194	11,290	FD3	595	1252M
FDEM4115T	193	10,891	FD3	610	1272M
FDEM4115T-5	194	10,891	FD3	695	1272M
FDEM4314T	193	15,638	FD3	910	A3658M
FDEM4314T-5	194	15,638	FD3	965	A3670M
FDEM4316T	193	18,232	FD3	977	A36070M
FDEM4316T-5	194	18,232	FD3	965	A36070M
FDEM4400T	193	22,698	FD3	1326	A40064M
FDEM4400T-5	194	22,698	FD3	1326	A40064M
FDL1177T	195	7,565	FD1	322	0956LC
FDL3501M	195	746	FD1	23	3414L
FDL3504M	195	871	FD1	28	3421L
FDL3507M	195	1,023	FD1	37	3432LC
FDL3510M	195	1,158	FD1	41	3524L
FDL3510TM	195	1,158	FD1	40	3524L
FDL3514M	195	1,303	FD1	49	3532LC
FDL3514TM	195	1,306	FD1	51	3532LC
FDL3516TM	195	1,843	FD1	51	3535LC
FDL3610M	195	2,531	FD1	90	3640LC
FDL3610TM	195	2,470	FD1	90	3640LC
FDL3611M	195	2,132	FD1	76	3634L
FDL3611TM	195	2,078	FD1	77	3634L
FDL3612TM	195	2,592	FD1	100	3646LC
FDL3619TM	195	1,989	FD1	82	3634LC
FDL3712TM	195	3,708	FD1	160	3752LC
FDL3731M	195	3,185	FD1	126	3730LC
FDL3732M	195	3,665	FD1	147	3740LC
FDL3733TM	195	3,374	FD1	146	3740LC
FDL3737TM	195	3,947	FD1	169	3752LC
FDL3912T	195	5,722	FD1	290	3956LC
FDM3538	193	873	FD3	24	3416M
FDM3542	193	934	FD3	27	3420M
FFC05	301	181	SVC	6	3420M
FFC07WB	301	286	SVC	19	3420M
FFC09	301	268	SVC	25	3420M
FFC09WB	301	393	SVC	28	3420M
FFC18	301	400	SVC	90	3420M
FFC19	301	479	SVC	120	3420M
FLT3210-250	285	960	SVC	2	–
FLT4280	285	960	SVC	9	–
FLT6320-400	285	960	SVC	14	–
FLT8500	285	1,172	SVC	9	–
FM3311T-8	42	1,426	GO3	96	3643M
FMTG100XPYIV	286	4,912	R3B	6	–
FMTG50XPYIV	286	4,912	R3B	6	–

Catalog Number	Page Number	List Price	Disc. Sym.	Ship Wgt(1)	Type Code
FPM2513T	134	3,016	PF3	205	3936M
FPM2514T	134	3,144	PF3	145	3742M
FPM2514T-5	135	3,144	PF3	145	3742M
FPM2515T	134	3,239	PF3	210	3936M
FPM2515T-5	135	3,239	PF3	231	3936M
FPM2516T	134	3,515	PF3	210	3934M
FPM2516T-2/4	134	3,515	PF3	206	3934M
FPM2516T-5	135	3,515	PF3	223	3934M
FPM2531TS	134	3,906	PF3	236	3956M
FPM2531TS-2/4	134	3,906	PF3	236	3956M
FPM2531TS-5	135	3,906	PF3	320	3956M
FPM2534T	134	4,058	PF3	235	3936M
FPM2534T-2/4	134	4,058	PF3	235	3936M
FPM2534T-5	135	4,058	PF3	240	3936M
FPM2535TS	134	4,848	PF3	334	4052M
FPM2535TS-2/4	134	4,848	PF3	375	4052M
FPM2535TS-5	135	4,848	PF3	420	4052M
FPM2538T	134	5,156	PF3	280	3954M
FPM2538T-2/4	134	5,156	PF3	254	3954M
FPM2538T-5	135	5,156	PF3	287	3954M
FPM2539TS	134	5,389	PF3	400	4052M
FPM2539TS-2/4	134	5,389	PF3	380	4052M
FPM2539TS-5	135	5,389	PF3	400	4052M
FPM2542T	134	5,880	PF3	331	4044M
FPM2542T-2/4	134	5,880	PF3	331	4044M
FPM2542T-5	135	5,880	PF3	449	4044M
FPM2543TS	134	5,952	PF3	385	4064M
FPM2543TS-2/4	134	5,952	PF3	385	4064M
FPM2543TS-5	135	5,952	PF3	452	4064M
FPM2546T	134	7,170	PF3	385	4062M
FPM2546T-2/4	134	7,170	PF3	385	4062M
FPM2546T-5	135	7,170	PF3	449	4062M
FPM2547TS	134	7,629	PF3	480	4252M
FPM2547TS-2/4	134	7,629	PF3	480	4252M
FPM2547TS-5	135	7,629	PF3	480	4252M
FPM2549T	134	9,778	PF3	485	4250M
FPM2549T-2/4	134	9,778	PF3	485	4250M
FPM2549T-5	135	9,778	PF3	480	4250M
FPM2550T	134	10,612	PF3	533	4260M
FPM2550T-2/4	134	10,612	PF3	533	4260M
FPM2550T-5	135	10,612	PF3	525	4260M
FPM2551TS	134	8,582	PF3	570	4272M
FPM2551TS-2/4	134	8,582	PF3	570	4272M
FPM2551TS-5	135	8,582	PF3	573	4272M
FPM2554T-4	134	14,772	PF3	660	4456M
FPM2555TS	134	12,889	PF3	597	4462M
FPM2555TS-2/4	134	12,889	PF3	597	4462M
FPM2555TS-5	135	12,889	PF3	648	4462M
FPM2556T-4	134	18,137	PF3	600	4466M
FPM2558TS-4	134	17,723	PF3	1579	A44054M
FPM2559TS-4	134	15,207	PF3	590	4476M
FPM2562T-4	134	23,264	PF3	1449	A44048M
FPM2563TS-4	134	21,801	PF3	1718	A44060M
FPM2565T-4	134	24,492	PF3	1737	A44056M
FPM2566TS-4	134	24,812	PF3	1844	A44072M
FPM2568T-4	134	36,334	PF3	1697	A44072M
FPM3312T	134	2,027	PF3	121	3728M
FPM3313T	134	2,281	PF3	130	3738M
FPM3314T	134	2,637	PF3	131	3734M
FSWDM23933T-E	87	11,294	WDF	283	3956M
FSWDM23934T-E	87	12,946	WDF	287	3960M
FSWDM3538-E	87	2,673	WDF	35	3516M
FSWDM3542-E	87	2,766	WDF	37	3522M
FSWDM3546-E	87	2,892	WDF	41	3522M
FSWDM3546T-E	87	2,915	WDF	41	3522M
FSWDM3554T-E	87	3,178	WDF	45	3528M
FSWDM3558T-E	87	3,652	WDF	48	3528M
FSWDM3611T-E	87	4,350	WDF	86	3636M
FSWDM3615T-E	87	4,647	WDF	101	3646M

(1) Shipping weight (lbs.) is approximate.

Index

Catalog Number	Page Number	List Price	Disc. Sym.	Ship Wgt(1)	Type Code
FSWDM3710T-E	87	5,888	WDF	136	3740M
FSWDM3714T-E	87	6,958	WDF	187	3756M
FSWDM41903T	87	16,573	WDF	378	4068M
FSWDM41904T	87	19,094	WDF	395	4074M
FVB3180	285	1,811	SVC	18	–
FVB3210	285	1,811	SVC	25	–
FVB3250	285	1,811	SVC	19	–
FVB4280	285	2,214	SVC	44	–
FVB6320	285	2,579	SVC	46	–
FVB6400	285	2,821	SVC	59	–
FVB8500	285	3,340	SVC	93	–
FVB95010	285	5,148	SVC	171	4074M
GA10	320	114	SVC	1	4074M
GA11	320	120	SVC	2	4074M
GA14	320	480	SVC	64	–
GA14R	318	448	SVC	64	–
GA16	320	594	SVC	62	4074M
GA16E	320	387	SVC	36	–
GA16R	318	651	SVC	62	4074M
GA16RE	318	387	SVC	36	–
GA20	320	975	SVC	121	4074M
GA20E	320	448	SVC	54	–
GA20RE	318	448	SVC	54	–
GA24	320	72	SVC	1	–
GA25	320	71	SVC	9	–
GA3	320	594	SVC	7	4074M
GA4	320	227	SVC	6	4074M
GA7	316	173	SVC	1	–
GA8	316	699	SVC	1	4074M
GA9	320	250	SVC	5	4074M
GA9-1	320	138	SVC	3	4074M
GA9R	318	250	SVC	5	4074M
GA9S	320	278	SVC	6	4074M
GA9SR	318	278	SVC	5	4074M
GDL1605T	197	2,673	FD1	97	3646LC
GDL1607T	197	3,516	FD1	142	3744LC
GDL1610T	197	4,067	FD1	160	3748LC
GDL1615T	197	6,052	FD1	271	3956LC
GDL2333T	197	7,565	FD1	310	0956LC
GDL3770T	197	4,395	FD1	198	0743LC
GDL3774T	197	5,083	FD1	210	0748LC
GDM2333T	197	4,723	FD3	231	0748M
GDM2334T	197	5,050	FD3	245	0760M
GDM2513T	197	3,129	FD3	156	3748M
GDM2515T	197	4,120	FD3	187	3766M
GDM2531T	197	5,062	FD3	245	3942M
GDM2535T	197	5,887	FD3	281	3952M
GDM3218T	197	1,479	FD3	68	3630M
GDM3311T	197	2,098	FD3	92	3644M
GDM3313T	197	2,542	FD3	116	3734M
GDM3615T	197	1,782	FD3	80	3634M
GDM3710T	197	2,233	FD3	117	3732M
GDM3714T	197	3,563	FD3	131	3740M
GDM4103T	197	7,176	FD3	345	0956M
GDM4104T	197	8,459	FD3	366	0964M
GDM4110T	197	11,288	FD3	497	1064M
GDM4115T	197	11,685	FD3	552	1246M
GSL3509M	200	1,278	FD1	41	3523LC
HA5027A03	299	12	SVC	1	–
HBA02333T	164	4,793	HB3	268	0944M
HBA02334T	164	5,203	HB3	293	–
HBA02394T	164	5,194	HB3	239	0934M
HBA03581T	164	1,494	HB3	58	0524M
HBA03586T	164	1,645	HB3	64	0532M
HBA03587T	164	1,587	HB3	64	0532M
HBA03660T	164	1,847	HB3	95	0624M
HBA03661T	164	1,776	HB3	100	0628M
HBA03663T	164	2,012	HB3	105	0632M
HBA03665T	164	1,910	HB3	120	0642M

Catalog Number	Page Number	List Price	Disc. Sym.	Ship Wgt(1)	Type Code
HBA03769T	164	2,885	HB3	173	0736M
HBA03770T	164	2,649	HB3	198	0738M
HBA03771T	164	2,919	HB3	203	0744M
HBA03774T	164	2,941	HB3	231	0748M
HBA04103T	164	6,795	HB3	378	–
HBA04104T	164	7,943	HB3	410	–
HBA04106T	164	5,153	HB3	293	–
HBA04108T	164	7,858	HB3	410	–
HBA04118T	164	6,715	HB3	378	–
HBEM2276T	165	4,864	HB3	281	–
HBEM2332T	165	5,480	HB3	322	–
HBEM2333T	165	4,447	HB3	268	0944M
HBEM2334T	165	5,286	HB3	295	–
HBEM3546T	165	1,492	HB3	58	0524M
HBEM3554T	165	1,540	HB3	42	–
HBEM3556T	165	1,732	HB3	43	–
HBEM3558T	165	1,587	HB3	64	0532M
HBEM3581T	165	1,823	HB3	55	–
HBEM3582T	165	2,011	HB3	56	–
HBEM3584T	165	1,881	HB3	42	–
HBEM3587T	165	1,960	HB3	62	–
HBEM3607T	165	2,031	HB3	76	–
HBEM3611T	165	1,775	HB3	74	–
HBEM3614T	165	2,113	HB3	94	–
HBEM3615T	165	1,910	HB3	120	0642M
HBEM3661T	165	2,210	HB3	100	0628M
HBEM3664T	165	2,398	HB3	123	–
HBEM3665T	165	2,254	HB3	115	–
HBEM3667T	165	2,364	HB3	99	–
HBEM3704T	165	2,688	HB3	135	–
HBEM3708T	165	2,986	HB3	154	–
HBEM3710T	165	2,648	HB3	198	0738M
HBEM3714T	165	2,941	HB3	231	0748M
HBEM3764T	165	2,936	HB3	211	–
HBEM3768T	165	3,359	HB3	198	–
HBEM3770T	165	3,292	HB3	193	–
HBEM3774T	165	3,264	HB3	232	–
HBEM4100T	165	7,284	HB3	369	–
HBEM4102T	165	9,484	HB3	393	–
HBEM4103T	165	6,903	HB3	400	–
HBEM4104T	165	8,068	HB3	410	–
HIC264A	203	593	FD1	20	3414C
HIC274A	203	593	FD1	20	3414C
IDBRPM18154C	249	8,449	RP2	180	–
IDBRPM18204C	249	9,224	RP2	209	–
IDBRPM21254C	249	9,638	RP2	290	–
IDBRPM21304C	249	9,638	RP2	290	–
IDBRPM21404	249	10,914	RP2	355	–
IDBRPM25504	249	11,412	RP2	475	–
IDBRPM25604	249	16,624	RP2	540	–
IDBRPM25754	249	19,765	RP2	605	–
IDBRPM281004R1	250	22,309	RP2	805	–
IDBRPM281254	250	23,580	RP2	890	–
IDBRPM321504R1	250	32,840	RP2	1310	–
IDBRPM362004R1	250	45,316	RP2	1950	–
IDBRPM362504R1	250	48,385	RP2	2000	–
IDBRPM403004R1	250	60,460	RP2	2620	–
IDBRPM444004	250	92,547	RP2	3940	–
IDBRPM445004	250	104,482	RP2	4260	–
IDBRPM5810004	250	275,718	RP2	8540	–
IDBRPM586004	250	232,371	RP2	7160	–
IDBRPM587004	250	232,371	RP2	7160	–
IDBRPM588004	250	243,205	RP2	7510	–
IDBRPM589004	250	264,880	RP2	8210	–
IDCRPM18104	249	9,849	RP3	208	–
IDCRPM18154	249	12,141	RP3	180	–
IDCRPM18204	249	12,608	RP3	194	–
IDCRPM21254	249	13,072	RP3	310	–
IDCRPM21304	249	13,732	RP3	290	–

(1) Shipping weight (lbs.) is approximate.

Index

Catalog Number	Page Number	List Price	Disc. Sym.	Ship Wgt(1)	Type Code
IDCRPM25404	249	14,892	RP3	410	–
IDCRPM25504	249	20,143	RP3	475	–
IDCRPM281004	250	34,349	RP3	880	–
IDCRPM281254	250	40,958	RP3	880	–
IDCRPM28604	249	22,795	RP3	635	–
IDCRPM28754	249	26,339	RP3	720	–
IDCSWDM3538	96	2,554	WDP	31	3514M
IDCSWDM3542	96	2,892	WDP	32	3518M
IDCSWDM3546	96	3,002	WDP	40	3524M
IDCSWDM3546T	96	3,002	WDP	42	3524M
IDCSWDM3554	96	3,211	WDP	51	3534M
IDCSWDM3554T	96	3,211	WDP	49	3534M
IDCSWDM3558	96	3,430	WDP	44	3528M
IDCSWDM3558T	96	3,430	WDP	48	3528M
IDCSWDM3611T	96	3,761	WDP	85	3636M
IDCSWDM3615T	96	4,377	WDP	99	3646M
IDCSWDM3710T	96	6,626	WDP	136	3740M
IDCSWDM3714T	96	7,576	WDP	187	3756M
IDDRPM18254C	249	9,664	RP1	200	–
IDDRPM18304C	249	10,023	RP1	230	–
IDDRPM21404	249	10,282	RP1	305	–
IDDRPM21504	249	13,572	RP1	345	–
IDDRPM21604	249	13,108	RP1	345	–
IDDRPM251004	250	19,085	RP1	545	–
IDDRPM251254	250	25,291	RP1	615	–
IDDRPM25506	249	15,740	RP1	480	–
IDDRPM25606	249	19,085	RP1	545	–
IDDRPM25754	249	15,740	RP1	480	–
IDDRPM25756	249	25,291	RP1	615	–
IDDRPM281006	250	28,237	RP1	770	–
IDDRPM281256	250	36,813	RP1	930	–
IDDRPM281504	250	28,237	RP1	770	–
IDDRPM282004	250	36,813	RP1	930	–
IDDRPM321506R1	250	43,317	RP1	1185	–
IDDRPM322006R1	250	50,443	RP1	1325	–
IDDRPM322504R1	250	43,317	RP1	1185	–
IDDRPM323004R1	250	50,443	RP1	1360	–
IDDRPM362506R1	250	54,917	RP1	1680	–
IDDRPM363006R1	250	63,875	RP1	2000	–
IDDRPM363504R1	250	54,917	RP1	1680	–
IDDRPM364004R1	250	63,877	RP1	2000	–
IDDRPM404006R1	250	84,322	RP1	2530	–
IDDRPM405004R1	250	74,096	RP1	2260	–
IDDRPM405006	250	108,400	RP1	2230	–
IDDRPM406004R1	250	102,800	RP1	2530	–
IDDRPM407004R1	250	107,936	RP1	3080	–
IDDRPM4410004R1	250	160,783	RP1	3505	–
IDDRPM446006	250	150,429	RP1	3505	–
IDDRPM447006	250	172,045	RP1	3505	–
IDDRPM448004	250	139,619	RP1	3080	–
IDDRPM449004	250	150,429	RP1	3505	–
IDDRPM5010006	250	191,106	RP1	5200	–
IDDRPM5012504	250	191,106	RP1	5200	–
IDDRPM5012506	250	217,614	RP1	6730	–
IDDRPM5014006	250	217,614	RP1	6730	–
IDDRPM5015004	250	203,631	RP1	5963	–
IDDRPM5017504	250	217,614	RP1	6730	–
IDDRPM508006	250	181,004	RP1	4690	–
IDDRPM509006	250	191,106	RP1	5200	–
IDFRPM18104C	249	7,783	RP3	179	–
IDFRPM21154C	249	8,811	RP3	290	–
IDFRPM21204C	249	8,811	RP3	290	–
IDFRPM21254C	249	9,516	RP3	355	–
IDFRPM25304C	249	10,016	RP3	475	–
IDFRPM25404	249	10,895	RP3	605	–
IDFRPM28504	249	18,608	RP3	720	–
IDFRPM28604	249	18,608	RP3	795	–
IDFRPM28754	249	22,231	RP3	880	–
IDM2276T	258	8,308	VS2	332	0954M
IDM2332T	258	10,151	VS2	352	0960M
IDM2333T	258	5,708	VS2	268	0944M
IDM2333T-5	258	5,708	VS2	318	0944M
IDM2334T	258	6,097	VS2	333	0960M
IDM2334T-5	258	6,097	VS2	333	0960M
IDM3581T	257	2,661	VS2	65	0524M
IDM3581T-5	257	2,661	VS2	65	0518M
IDM3582T	257	3,125	VS2	68	0528M
IDM3584T	257	2,814	VS2	70	0530M
IDM3584T-5	257	2,814	VS2	70	0530M
IDM3587T	257	3,009	VS2	72	0534M
IDM3587T-5	257	3,009	VS2	73	0534M
IDM3661T	257	3,043	VS2	111	0632M
IDM3661T-5	257	3,043	VS2	112	0632M
IDM3664T	257	3,610	VS2	124	0642M
IDM3665T	258	4,066	VS2	124	0640M
IDM3665T-5	258	4,066	VS2	124	0640M
IDM3667T	257	3,729	VS2	107	0630M
IDM3764T	257	4,721	VS2	187	0738M
IDM3768T	258	5,778	VS2	226	0748M
IDM3770T	258	4,902	VS2	170	0738M
IDM3770T-5	258	4,902	VS2	170	0738M
IDM3774T	258	5,252	VS2	231	0748M
IDM3774T-5	258	5,252	VS2	231	0748M
IDM4100T	258	12,034	VS2	450	1046M
IDM4102T	258	13,548	VS2	455	1054M
IDM4103T	258	7,518	VS2	417	1054M
IDM4104T	258	8,624	VS2	464	1056M
IDM4110T	258	11,661	VS2	605	1254M
IDM4111T	258	15,440	VS2	557	1260M
IDM4115T	258	13,087	VS2	622	1272M
IDM4117T	258	17,185	VS2	628	1264M
IDNM2237T	258	4,704	VS4	242	0932M
IDNM2238T	258	5,395	VS4	286	0948M
IDNM2333T	258	6,488	VS4	286	0948M
IDNM2334T	258	7,005	VS4	406	1056M
IDNM3534	257	759	VS4	33	3512M
IDNM3538	257	886	VS4	31	3512M
IDNM3542	257	988	VS4	33	3514M
IDNM3581T	257	2,014	VS4	58	0524M
IDNM3584T	257	2,224	VS4	58	0530M
IDNM3587T	257	2,322	VS4	67	0534M
IDNM3661T	257	3,043	VS4	108	0636M
IDNM3661T-5	257	3,043	VS4	108	0636M
IDNM3665T	258	3,393	VS4	116	0640M
IDNM3665T-5	258	3,393	VS4	116	0642M
IDNM3669T	257	2,695	VS4	94	0624M
IDNM3767T	258	3,782	VS4	170	0736M
IDNM3770T	258	3,927	VS4	196	0748M
IDNRPM18054C	249	6,178	RP4	143	–
IDNRPM18074C	249	7,102	RP4	194	–
IDNRPM21104C	249	7,645	RP4	280	–
IDVSM2333T	258	5,802	VS3	291	0944M
IDVSM2334T	258	6,290	VS3	321	0960M
IDVSM2334T-5	258	6,290	VS3	321	0960M
IDVSM3661T	257	2,564	VS3	105	0632M
IDVSM3665T	258	2,973	VS3	120	0642M
IDVSM3665T-5	258	2,973	VS3	118	0640M
IDVSM3770T	258	3,825	VS3	180	0738M
IDVSM3774T	258	4,987	VS3	231	0748M
IDVSM3774T-5	258	4,987	VS3	231	0748M
IDVSM4103T	258	7,987	VS3	446	1054M
IDVSM4104T	258	8,726	VS3	457	1056M
IDVSM4110T	258	10,066	VS3	619	1254M
IDVSM4115T	258	12,303	VS3	670	1272M
IDVSM4314T	258	15,239	VS3	869	A36062M
IDVSM4316T	258	19,087	VS3	873	A36070M
IDVSM4400T-4	258	24,667	VS3	1218	A40064M
IDVSM4406T-4	258	36,542	VS3	1789	A44078M

(1) Shipping weight (lbs.) is approximate.

Index

Catalog Number	Page Number	List Price	Disc. Sym.	Ship Wgt(1)	Type Code
IDVSM4407T-4	258	43,298	VS3	2189	A44106M
IDVSM4408T-4	258	61,195	VS3	2511	A44128M
IDVSM4410T-4	258	30,620	VS3	1637	A44062M
IDVSM44304T-4	258	61,195	VS3	2816	A44160M
IDVSNM2237T	258	3,933	VS4	212	0748M
IDVSNM2237T-5	258	3,933	VS4	196	0748M
IDVSNM2238T	258	5,395	VS4	305	0948M
IDVSNM2333T	258	6,488	VS4	284	0948M
IDVSNM2333T-5	258	6,488	VS4	284	0948M
IDVSNM3534	257	759	VS4	32	3512M
IDVSNM3538	257	886	VS4	35	3516M
IDVSNM3538-5	257	886	VS4	31	3514M
IDVSNM3542	257	988	VS4	36	3516M
IDVSNM3542-5	257	988	VS4	35	3516M
IDVSNM3546	257	1,605	VS4	45	3524M
IDVSNM3546-5	257	1,605	VS4	45	3524M
IDVSNM3581T	257	2,014	VS4	58	0524M
IDVSNM3581T-5	257	2,014	VS4	58	0524M
IDVSNM3582T	257	3,119	VS4	61	0528M
IDVSNM3584T	257	2,224	VS4	64	0532M
IDVSNM3584T-5	257	2,224	VS4	64	0532M
IDVSNM3587T	257	2,322	VS4	63	0534M
IDVSNM3587T-5	257	2,322	VS4	62	0534M
IDVSNM3661T	257	3,043	VS4	111	0636M
IDVSNM3665T	258	3,393	VS4	124	0642M
IDVSWDM3538	96	2,533	WDP	32	3516M
IDVSWDM3542	96	2,878	WDP	35	3518M
IDVSWDM3546	96	2,987	WDP	40	3524M
IDVSWDM3546T	96	2,987	WDP	40	3524M
IDVSWDM3554	96	3,195	WDP	50	3534M
IDVSWDM3554T	96	3,195	WDP	50	3534M
IDVSWDM3558	96	3,402	WDP	45	3528M
IDVSWDM3558T	96	3,402	WDP	46	3528M
IDVSWDM3611T	96	3,577	WDP	80	3636M
IDVSWDM3615T	96	4,169	WDP	97	3646M
IDWNM22937T	107	6,804	WDW	283	3948M
IDWNM22938T	107	6,929	WDW	287	3956M
IDWNM3546T	107	2,554	WDW	41	3524M
IDWNM3554T	107	2,813	WDW	52	3534M
IDWNM3609T	107	3,316	WDW	77	3628M
IDWNM3611T	107	3,376	WDW	90	3640M
IDWNM3707T	107	3,820	WDW	122	3734M
IR3501M	201	848	FD1	25	3414L
IR3504M	201	975	FD1	28	3421L
IR3507M	201	1,115	FD1	40	3524L
IR3510M	201	1,207	FD1	40	3528L
JEWDM3545	105, 142	1,732	WDW	38	3520M
JEWDM3550	105, 142	1,829	WDW	41	3526M
JEWDM3555	105, 142	2,032	WDW	41	3526M
JEWDM3559	105, 142	2,409	WDW	64	3540M
JL1205A	139	479	PJ1	25	3416L
JL1301A	139	552	PJ1	23	3414L
JL1303A	139	538	PJ1	26	3420L
JL1304A	139	649	PJ1	25	3418L
JL1306A	139	708	PJ1	33	3424L
JL1307A	139	818	PJ1	33	3428L
JL1309A	139	734	PJ1	32	3428L
JL1313A	139	1,024	PJ1	36	3432LC
JL1317A	139	1,263	PJ1	45	3528L
JL1323A	139	1,296	PJ1	52	3535LC
JL3405A	138	555	PJ1	19	3416L
JL3501A	138	693	PJ1	22	3414L
JL3503A	138	636	PJ1	26	3420L
JL3504A	138	805	PJ1	27	3421L
JL3506A	138	757	PJ1	29	3424L
JL3507A	138	955	PJ1	33	3428LC
JL3509A	138	925	PJ1	42	3524L
JL3510A	138	1,097	PJ1	40	3528L
JL3513A	138	1,097	PJ1	45	3528L

Catalog Number	Page Number	List Price	Disc. Sym.	Ship Wgt(1)	Type Code
JL3514A	138	1,202	PJ1	51	3532LC
JL3515A	138	1,288	PJ1	54	3535L
JL3516A	138	1,368	PJ1	52	3535LC
JM3006	141	527	PJ3	19	3410M
JM3107	141	557	PJ3	21	3413M
JM3108	141	665	PJ3	23	3416M
JM3111	141	660	PJ3	23	3416M
JM3112	141	734	PJ3	27	3420M
JM3115	141	734	PJ3	32	3420M
JM3116	141	805	PJ3	30	3424M
JM3120	141	876	PJ3	30	3424M
JM3154	141	958	PJ3	34	3432M
JM3155	141	1,041	PJ3	35	3430M
JM3158	141	1,235	PJ3	42	3524M
JM3457	140	578	PJ3	19	3410M
JM3458	140	626	PJ3	21	3413M
JM3460	140	626	PJ3	21	3413M
JM3460-5	140	626	PJ3	21	3413M
JM3461	140	738	PJ3	23	3416M
JM3463	140	685	PJ3	23	3416M
JM3463-5	140	685	PJ3	23	3416M
JM3542	140	797	PJ3	26	3420M
JMEWDM23933T	106, 152	8,765	WDW	252	3942M
JMEWDM23934T	106, 152	10,129	WDW	275	3952M
JMEWDM3545T	106, 152	1,800	WDW	35	3516M
JMEWDM3546T	106, 152	1,879	WDW	39	3524M
JMEWDM3550T	106, 152	1,889	WDW	48	3528M
JMEWDM3554T	106, 152	1,963	WDW	50	3534M
JMEWDM3555T	106, 152	2,062	WDW	47	3526M
JMEWDM3558T	106, 152	2,149	WDW	48	3530M
JMEWDM3559T	106, 152	2,518	WDW	50	3532M
JMEWDM3611T	106, 152	2,819	WDW	70	3632M
JMEWDM3613T	106, 152	3,323	WDW	81	3634M
JMEWDM3613T-5	106, 152	3,323	WDW	74	3630M
JMEWDM3615T	106, 152	3,175	WDW	93	3642M
JMEWDM3616T	106, 152	3,937	WDW	96	3646M
JMEWDM3710T	106, 152	3,990	WDW	151	3738M
JMEWDM3711T	106, 152	5,083	WDW	130	3736M
JMEWDM3713T	106, 152	6,341	WDW	169	3752M
JMEWDM3714T	106, 152	4,242	WDW	165	3752M
JMEWDM4103T	110, 153	8,197	WDW	437	1056M
JMEWDM4104T	110, 153	9,318	WDW	460	1060M
JMEWDM4107T	110, 153	8,492	WDW	446	1050M
JMEWDM4108T	110, 153	10,043	WDW	459	1066M
JMEWDM4109T	110, 153	13,592	WDW	587	1256M
JMEWDM4110T	110, 153	12,078	WDW	600	1260M
JMEWDM4114T	110, 153	14,160	WDW	635	1266M
JMEWDM4115T	110, 153	13,876	WDW	700	1272M
JMEWDM41906T	106, 152	10,176	WDW	255	3960M
JMEWDM4310T	110, 153	21,161	WDW	999	A36056M
JMEWDM4313T	110, 153	22,622	WDW	1005	A36068M
JMEWDM4314T	110, 153	20,094	WDW	961	A3658M
JMEWDM4316T	110, 153	21,649	WDW	965	A36070M
JMFSWDM23933T-E	88, 154	12,162	WDF	286	3956M
JMFSWDM23934T-E	88, 154	13,814	WDF	295	3960M
JMFSWDM23994T-E	88, 154	12,328	WDF	265	3952M
JMFSWDM3546T-E	88, 154	3,440	WDF	37	3522M
JMFSWDM3550T-E	88, 154	3,578	WDF	50	3532M
JMFSWDM3554T-E	88, 154	3,598	WDF	45	3528M
JMFSWDM3555T-E	88, 154	4,075	WDF	50	3532M
JMFSWDM3558T-E	88, 154	4,133	WDF	56	3538M
JMFSWDM3559T-E	88, 154	4,895	WDF	61	3546M
JMFSWDM3611T-E	88, 154	5,139	WDF	83	3636M
JMFSWDM3613T-E	88, 154	5,535	WDF	81	3634M
JMFSWDM3615T-E	88, 154	5,573	WDF	101	3646M
JMFSWDM3709T-E	88, 154	6,524	WDF	131	3734M
JMFSWDM3710T-E	88, 154	6,647	WDF	139	3740M
JMFSWDM3711T-E	88, 154	7,315	WDF	154	3744M
JMFSWDM3713T-E	88, 154	10,588	WDF	187	3756M

(1) Shipping weight (lbs.) is approximate.

Index

Catalog Number	Page Number	List Price	Disc. Sym.	Ship Wgt(1)	Type Code
JMFSWDM3714T-E	88, 154	7,717	WDF	187	3756M
JMFSWDM41906T-E	88, 154	13,882	WDF	300	3960M
JML1406T	144	1,749	PC1	69	3628L
JML1408T	144	2,004	PC1	80	3634LC
JML1409T	144	2,468	PC1	81	3634LC
JML1508T	144	2,844	PC1	115	3727L
JML1509T	144	3,540	PC1	116	3729L
JML1510T	144	3,745	PC1	142	3740LC
JML1511T	144	4,354	PC1	141	3740L
JML1512T	144	4,635	PC1	150	3744LC
JML3606T	144	1,833	PC1	79	3634L
JML3608T	144	2,442	PC1	93	3640LC
JMXM14321T	118	3,420	XPP	59	3532M
JMXM18322T	118	4,023	XPP	80	3622M
JMXM18522T	118	4,589	XPP	91	3634M
JMXM18721T	118	4,757	XPP	115	3646M
JMXM21122T	118	5,625	XPP	205	3756M
JMXM21722T	118	5,406	XPP	149	3728M
JPDRX18344T	128	3,473	XDP	127	0632M
JPDRX18344T-5	128	3,473	XDP	127	0632M
JPDRX18544T	128	3,985	XDP	152	0642M
JPDRX18544T-5	128	3,985	XDP	152	0642M
JPDRX21144TY	128	6,629	XDP	252	0750M
JPDRX21144TY-5	128	6,629	XDP	252	0750M
JPDRX21744TY	128	5,082	XDP	228	0738M
JPDRX21744TY-5	128	5,082	XDP	228	0738M
JPL1406T	144	1,749	PC1	76	3628L
JPL1408T	144	2,004	PC1	87	3634LC
JPL1409T	144	2,468	PC1	88	3634LC
JPL1508T	144	2,844	PC1	117	3727L
JPL1509T	144	3,540	PC1	121	3729L
JPL1510T	144	3,745	PC1	143	3740LC
JPL1511T	144	4,354	PC1	148	3740L
JPL1512T	144	4,635	PC1	142	3744LC
JSL325A	143	619	PJ1	24	3416L
JSL425A	143	657	PJ1	26	3420L
JSL525A	143	701	PJ1	30	3424L
JSL625A	143	955	PJ1	42	3524L
JSL725A	143	958	PJ1	47	3528L
JSM3107	143	557	PJ3	21	3413M
JSM3111	143	659	PJ3	24	3416M
JSM3115	143	729	PJ3	27	3420M
JSM3120	143	869	PJ3	31	3424M
JSM3155	143	1,029	PJ3	35	3430M
JWDM3463	105, 142	1,097	WDW	33	3514M
JXL050522A	119	3,420	XPP	37	3513L
JXL050722A	119	4,022	XPP	40	3524L
JXL05122A	119	4,589	XPP	50	3524L
JXL051522	119	4,757	XPP	54	3530L
JXL05222	119	5,406	XPP	67	3540L
JXM05122	119	2,529	XPP	41	3516M
JXM051522	119	2,656	XPP	47	3520M
JXM05222	119	3,048	XPP	55	3526M
K18G10	301	241	SVC	27	3526M
K18G11	301	241	SVC	30	3526M
K18G12	301	255	SVC	33	3526M
K18G8	301	194	SVC	21	3526M
K18G9	301	194	SVC	24	3526M
K36G2	296	887	SVC	72	3526M
K36G2XT	295	887	SVC	65	3526M
K36G50	301	1,656	SVC	123	3526M
K36G8	298	443	SVC	37	–
K36G801	296	1,577	SVC	65	3526M
K36G9	298	456	SVC	25	3526M
K40G70	296	1,319	SVC	120	3526M
K40G70XT	295	2,023	SVC	125	3526M
K40G71	296	2,023	SVC	116	3526M
K40G71XT	295	2,023	SVC	125	3526M
K40G8	298	443	SVC	35	3526M
K40G801	296	2,974	SVC	117	3526M
K40G802	296	2,092	SVC	135	3526M
K40G9	298	456	SVC	30	3526M
K44G5	298	914	SVC	125	3526M
K44G70	296	2,023	SVC	21	3526M
K44G71	296	2,144	SVC	196	3526M
K44G71XT	295	2,144	SVC	30	3526M
K44G8	298	456	SVC	55	3526M
K44G801	296	3,530	SVC	140	3526M
K44G802	296	2,974	SVC	155	3526M
K44G9	298	541	SVC	135	3526M
K99G70	262	1,751	SVC	9	3526M
K99G71	262	1,751	SVC	9	3526M
K99G72	262	1,751	SVC	35	3526M
K99G73	262	1,751	SVC	4	3526M
K99G74	262	1,751	SVC	5	3526M
K99G75	262	1,751	SVC	9	3526M
K99G76	262	1,751	SVC	5	3526M
K99G77	262	1,751	SVC	5	3526M
K99G78	262	1,970	SVC	3	3526M
K99G79	262	1,970	SVC	6	3526M
K99G80	262	1,751	SVC	5	3526M
K99G81	262	1,751	SVC	5	3526M
K99G82	262	2,652	SVC	6	3526M
K99G83	262	2,652	SVC	6	3526M
KBL3406	216	1,714	BE1	27	3414L
KBL3409	216	1,880	BE1	32	3421L
KBM3454	217	1,413	BE3	26	3413M
KBM3458	217	1,502	BE3	23	3416M
KEL11203	22	728	GO1	22	3411LC
KEL11205	22	766	GO1	24	3413LC
KEL11205A	22	810	GO1	24	3413LC
KEM30003	40	749	GO3	21	3413M
KEM30006	40	784	GO3	22	3413M
KENM3454	31	845	GE3	26	3512M
KENM3534	31	932	GE3	33	3512M
KENM3535	31	1,370	GE3	35	3520M
KL1200	22	530	GO1	19	3408L
KL3400	19	626	GE1	19	3408L
KL3401	19	876	GE1	24	3418L
KL3403	19	644	GE1	20	3411L
KL3405	19	594	GE1	24	3413L
KM3454	31	542	GE3	19	3410M
KM3454-57	239	594	5E3	20	3410M
KM3457	31	553	GE3	20	3410M
KNM3454	31	573	GE3	18	3410M
KNM3457/35	31	891	GE3	29	3512M
KNM3534	31	634	GE3	23	3416M
L1177T	18	10,387	GE1	323	0956LC
L1200	20	494	GO1	18	3408L
L1201	20	757	GO1	23	3418L
L1205-50	237	548	5O1	22	3416L
L1206-50	237	667	5O1	24	3418L
L1208-50	237	603	5O1	25	3420L
L1209-50	237	837	5O1	28	3424L
L1304-50	237	759	5O1	29	3424L
L1306-50	237	734	5O1	28	3424L
L1307-50	237	937	5O1	38	3524L
L1309-50	237	772	5O1	34	3432L
L1313-50	237	1,084	5O1	43	3528L
L1313T	20	942	GO1	36	3520L
L1317-50	237	1,444	5O1	47	3532L
L1318-50	237	1,143	5O1	41	3528L
L1318T	20	995	GO1	43	3528L
L1318TM	20	1,037	GO1	42	3528L
L1319-50	237	1,317	5O1	41	3528L
L1319T	20	1,060	GO1	42	3528L
L1320T	21	1,342	GO1	46	3528LC
L1321T	20	1,273	GO1	49	3535L

(1) Shipping weight (lbs.) is approximate.

Index

Catalog Number	Page Number	List Price	Disc. Sym.	Ship Wgt(1)	Type Code
L1321TM	20	1,382	GO1	48	3535L
L1322T	21	1,298	GO1	49	3532LC
L1322TM	21	1,413	GO1	45	3532LC
L1405T	21	1,332	GO1	66	3628L
L1405T-50	237	1,531	5O1	66	3628L
L1406T	21	1,526	GO1	65	3628L
L1408T	21	1,442	GO1	76	3634LC
L1408T-50	237	1,655	5O1	91	3646LC
L1408TM	21, 208	1,696	GO1	74	3634LC
L1409T	21	1,816	GO1	79	3634L
L1410T	21	1,517	GO1	81	3640LC
L1410TM	21, 208	2,063	GO1	85	3640LC
L1430T	21	1,564	GO1	78	3634LC
L1430TM	21	2,063	GO1	82	3634LC
L1508T	21	2,251	GO1	108	3727L
L1508T-50	237	2,589	5O1	112	3730LC
L1509T	21	2,806	GO1	94	3640LC
L1510T	21	2,442	GO1	134	3740LC
L1511T	21	3,539	GO1	131	3740L
L1512T	21	3,563	GO1	132	3737LC
L3	322	111	SVC	1	–
L3351	17	525	GE1	15	3310L
L3352	17	537	GE1	15	3310L
L3353	17	547	GE1	16	3313L
L3354	17	563	GE1	16	3313L
L3355	17	596	GE1	18	3316L
L3356	17	603	GE1	18	3316L
L3400	17	594	GE1	18	3408L
L3401	17	837	GE1	23	3418L
L3403	17	609	GE1	20	3411L
L3403M	17	698	GE1	11	3411L
L3404	17	891	GE1	25	3421L
L3405	17	555	GE1	21	3413L
L3406	17	647	GE1	22	3414L
L3406M	17	734	GE1	22	3414L
L3407	17	980	GE1	27	3424L
L3408	17	627	GE1	22	3413L
L3409	17	718	GE1	26	3421L
L3409-50	237	843	5E1	31	3428L
L3409M	17	863	GE1	26	3421L
L3500	17	935	GE1	30	3516L
L3501	17	626	GE1	22	3414L
L3501-50	237	741	5E1	25	3418L
L3501M	17	734	GE1	22	3414L
L3502	17	980	GE1	28	3424L
L3503	17	627	GE1	23	3413L
L3503-50	237	725	5E1	27	3420L
L3504	17	734	GE1	27	3421L
L3504-50	237	843	5E1	32	3428L
L3504A	17	878	GE1	27	3421L
L3504M	17	863	GE1	27	3421L
L3505	17	1,388	GE1	43	3528L
L3506	17	706	GE1	28	3424L
L3506-50	237	809	5E1	35	3520L
L3507	17	845	GE1	33	3428LC
L3507-50	237	1,001	5E1	38	3524L
L3507A	17	1,059	GE1	35	3428LC
L3507M	17	1,013	GE1	33	3428LC
L3508	17	1,607	GE1	44	3528LC
L3508T	17	1,581	GE1	46	3528LC
L3509	18	818	GE1	37	3520L
L3509-50	237	940	5E1	40	3524L
L3509M	18	925	GE1	40	3524L
L3510	18	958	GE1	41	3524L
L3510-50	237	1,151	5E1	47	3532L
L3510A	18	1,191	GE1	40	3524L
L3510M	18	1,149	GE1	38	3524L
L3510T	18	978	GE1	39	3524L
L3510TM	18	1,149	GO1	40	3524L

Catalog Number	Page Number	List Price	Disc. Sym.	Ship Wgt(1)	Type Code
L3513	18	1,097	GE1	41	3524L
L3513-50	237	1,238	5E1	48	3532L
L3513M	18	1,255	GE1	46	3528L
L3513T	18	1,075	GE1	43	3524L
L3514	18	1,107	GE1	49	3532LC
L3514-50	237	1,301	5E1	46	3535LC
L3514A	18	1,411	GE1	48	3532LC
L3514M	18	1,298	GE1	51	3532LC
L3514T	18	1,123	GE1	44	3526LC
L3514T-50	237	1,301	5E1	51	3535LC
L3514TM	18	1,298	GO1	49	3532LC
L3515	18	1,400	GE1	52	3535L
L3515-50	237	1,610	5E1	53	3535LC
L3515M	18	1,466	GE1	52	3535L
L3515T	18	1,411	GE1	52	3535L
L3516T	18	1,793	GE1	51	3535LC
L3516TM	18, 208	1,848	GO1	46	3528LC
L3605	210	2,371	DPL	67	3628L
L3605T	18	1,602	GE1	68	3628L
L3605T-50	237	1,839	5E1	76	3634LC
L3605TM	18	1,955	GO1	73	3634L
L3606T	18	1,655	GE1	74	3634L
L3607	210	3,106	DPL	74	3634L
L3608T	18	2,276	GE1	88	3640LC
L3608TM	18, 208	2,348	GO1	89	3640LC
L3609T	18	1,885	GE1	80	3634LC
L3609T-50	237	2,165	5E1	95	3646LC
L3609TM	18, 208	2,040	GO1	79	3634LC
L3612TM	18, 208	2,371	GO1	100	3646LC
L3613T	18	2,934	GE1	77	3634LC
L3703	210	5,128	DPL	113	3728LC
L3705	210	4,043	DPL	117	3735LC
L3708T	18	2,251	GE1	116	3726LC
L3708T-50	237	2,589	5E1	119	3732LC
L3708TM	18	2,643	GO1	135	3744LC
L3709T	18	2,931	GE1	123	3735LC
L3710T	18	2,972	GE1	134	3734LC
L3711T	18	3,593	GE1	148	3744LC
L3712T	18	3,647	GE1	158	3748LC
L3912T	18	9,328	GE1	303	3956LC
L4	322	129	SVC	1	–
L7	322	250	SVC	1	3956LC
LPL50	322	977	GBX	43	3520S
LPL75	322	1,193	GBX	48	3524C
M1004T	207	1,446	DP2	33	3520M
M1005T	207	1,503	DP2	38	3524M
M1006T	207	1,736	DP2	41	3528M
M1007T	207	1,864	DP2	56	3623M
M1008T	207	2,244	DP2	71	3634M
M1009T	207	3,206	DP2	113	3734M
M1010T	207	3,634	DP2	133	3742M
M1019	207	1,553	DP2	36	3524M
M1020T	207	1,673	DP2	41	3528M
M1021T	207	2,027	DP2	55	3623M
M1022T	207	2,312	DP2	64	3628M
M1023T	207	2,692	DP2	72	3634M
M1024T	207	4,143	DP2	113	3735M
M1204T	207	1,446	DP2	33	3520M
M1205T	207	1,503	DP2	37	3524M
M1206T	207	1,736	DP2	41	3528M
M1207T	207	1,864	DP2	56	3623M
M1208T	207	2,244	DP2	72	3634M
M1209T	207	3,206	DP2	112	3734M
M1210T	207	3,634	DP2	132	3744M
M1211T	207	5,105	DP2	206	3936M
M1212T	207	6,256	DP2	204	3936M
M1213T	207	7,341	DP2	330	4046M
M1218	207	1,479	DP2	33	3520M
M1219	207	1,553	DP2	36	3524M

(1) Shipping weight (lbs.) is approximate.

Index

Catalog Number	Page Number	List Price	Disc. Sym.	Ship Wgt(1)	Type Code
M1220T	207	1,673	DP2	41	3528M
M1221T	207	2,027	DP2	55	3623M
M1222T	207	2,312	DP2	65	3628M
M1223T	207	2,692	DP2	72	3634M
M1224T	207	4,143	DP2	113	3735M
M1225T	207	5,510	DP2	148	3740M
M1226T	207	6,223	DP2	172	3750M
M1227T	207	7,550	DP2	345	4040M
M1228T	207	10,125	DP2	330	4046M
M1504T	205	2,154	DP2	39	3524M
M1505T	205	2,276	DP2	47	3535M
M1506T	205	2,763	DP2	64	3628M
M1507T	205	3,129	DP2	84	3640M
M1508T	205	4,087	DP2	134	3744M
M1509T	205	5,320	DP2	185	3754M
M1519	206	1,680	DP2	37	3524M
M1520T	206	1,754	DP2	42	3528M
M1521T	206	2,165	DP2	58	3623M
M1522T	206	2,485	DP2	66	3628M
M1523T	206	2,906	DP2	73	3634M
M1524T	206	4,551	DP2	126	3740M
M1554T	205	1,518	DP2	33	3520M
M1555T	205	1,579	DP2	41	3528M
M1556T	205	1,834	DP2	41	3528M
M1557T	205	1,971	DP2	65	3628M
M1558T	205	2,508	DP2	83	3640M
M1704T	205	2,154	DP2	45	3530M
M1705T	205	2,276	DP2	47	3535M
M1706T	205	2,763	DP2	65	3628M
M1707T	205	3,129	DP2	84	3640M
M1708T	205	4,087	DP2	132	3742M
M1709T	205	5,320	DP2	181	3754M
M1710T	205	8,195	DP2	263	0940M
M1711T	205	9,488	DP2	267	0944M
M1712T	205	12,055	DP2	378	1046M
M1713T	205	14,634	DP2	397	1048M
M1718	206	1,566	DP2	29	3515M
M1719	206	1,731	DP2	33	3517M
M1720T	206	1,754	DP2	35	3521M
M1721T	206	2,165	DP2	50	3528M
M1722T	206	2,485	DP2	58	3536M
M1723T	206	2,906	DP2	73	3634M
M1724T	206	4,551	DP2	128	3740M
M1725T	206	5,882	DP2	230	0928M
M1726T	206	6,769	DP2	225	0750M
M1727T	206	8,034	DP2	355	1036M
M1728T	206	10,893	DP2	390	1046M
M1729T	206	11,474	DP2	512	1240M
M1754T	205	1,518	DP2	33	3518M
M1755T	205	1,579	DP2	38	3523M
M1756T	205	1,834	DP2	45	3531M
M1757T	205	1,971	DP2	63	3628M
M1758T	205	2,508	DP2	84	3640M
M1759T	205	3,532	DP2	136	3742M
M1760T	205	4,161	DP2	158	3748M
M1761T	205	5,752	DP2	247	0934M
M1762T	205	6,799	DP2	344	1034M
M1763T	205	7,889	DP2	384	1040M
M2538T-8	37	6,068	GO3	259	3946M
M3108-57	238	647	5O3	26	3420M
M3112-57	238	720	5O3	26	3420M
M3153T	34	965	GO3	33	3428M
M3160	34	1,359	GO3	38	3522M
M3353	23	619	GE3	16	3313M
M3355	23	701	GE3	17	3316M
M3452	23	723	GE3	17	3408M
M3454	23	512	GE3	19	3410M
M3455	23	805	GE3	18	3411M
M3457	23	520	GE3	20	3410M
M3458	23	624	GE3	21	3413M
M3460	23	603	GE3	19	3410M
M3461	23	731	GE3	22	3416M
M3463	23	664	GE3	21	3413M
M3464	23	790	GE3	25	3420M
M3531	23	797	GE3	23	3411M
M3532	23	1,161	GE3	28	3514M
M3534	23	560	GE3	21	3413M
M3534-5	26	560	GE3	20	3413M
M3535	23	896	GE3	22	3414M
M3536	23	1,265	GE3	29	3514M
M3537	23	603	GE3	19	3410M
M3537-5	26	603	GE3	19	3410M
M3538	23	570	GE3	23	3416M
M3538-5	26	641	GE3	22	3416M
M3538-57	238	734	5E3	26	3420M
M3539	23	965	GE3	24	3418M
M3539-5	26	965	GE3	23	3418M
M3539-TP	187	1,029	HV3	29	3516M
M3541	23	664	GE3	21	3413M
M3541-5	26	664	GE3	21	3413M
M3541-57	238	734	5E3	25	3420M
M3542	23	685	GE3	25	3420M
M3542-5	26	685	GE3	26	3420M
M3542-57	238	785	5E3	32	3428M
M3543	23	985	GE3	32	3428M
M3543-5	26	985	GE3	33	3428M
M3543T	23	985	GE3	33	3428M
M3543T-5	26	985	GE3	34	3428M
M3560	23	1,419	GE3	38	3522M
M3562T	23	1,805	GE3	51	3530M
M3602	209	2,114	DPL	51	3530M
M3AA063075-B14	229	87	SVC	1	–
M3AA063115-B5	229	85	SVC	1	–
M3AA071085-B14	229	108	SVC	1	–
M3AA071130-B5	229	108	SVC	1	–
M3AA080100-B14	229	145	SVC	1	–
M3AA080165-B5	229	145	SVC	1	–
M3AA090115-B14	229	189	SVC	1	–
M3AA090165-B5	229	115	SVC	2	–
M3AA100130-B14	229	297	SVC	2	–
M3AA100215-B5	229	295	SVC	3	–
M3AA112130-B14	229	309	SVC	7	–
M3AA112215-B5	229	309	SVC	14	–
M3AA132165-B14	229	372	SVC	11	–
M3AA132265-B5	229	336	SVC	15	–
M3AA160215-B14	229	455	SVC	27	–
M3AA160300-B5	229	455	SVC	40	–
M3AA180300-B5	229	798	SVC	54	–
M3AA200350-B5	229	1,005	SVC	57	–
M3AA225400-B5	229	1,574	SVC	63	–
M3AA250500-B5	229	1,923	SVC	95	–
M3BP071085-B14	229	81	SVC	3	–
M3BP071130-B5	229	97	SVC	5	–
M3BP080100-B14	229	100	SVC	4	–
M3BP080165-B5	229	115	SVC	7	–
M3BP090115-B14	229	133	SVC	6	–
M3BP090165-B5	229	133	SVC	9	–
M3BP100130-B14	229	193	SVC	8	–
M3BP100215-B5	229	191	SVC	11	–
M3BP112130-B14	229	321	SVC	7	–
M3BP112215-B5	229	321	SVC	10	–
M3BP132165-B14	229	351	SVC	11	–
M3BP132265-B5	229	351	SVC	21	–
M3BP160300-B5	229	470	SVC	31	–
M3BP180300-B5	229	693	SVC	37	–
M3BP200350-B5	229	1,071	SVC	49	–
M3BP225400-B5	229	1,298	SVC	63	–
M3BP250500-B5	229	1,923	SVC	85	–

(1) Shipping weight (lbs.) is approximate.

Index

Catalog Number	Page Number	List Price	Disc. Sym.	Ship Wgt[1]	Type Code
M3BP280500-B5	229	1,327	SVC	95	–
M3BP280500-B5-2P	229	1,327	SVC	97	–
MM06184-S-AP	223	364	IPP	10	–
MM07254-S-AP	223	374	IPP	11	–
MM07254-S-PP	226	418	IPP	22	–
MM07372-S-AP	223	390	IPP	11	–
MM07372-S-PP	226	435	IPP	24	–
MM07374-S-AP	223	421	IPP	11	–
MM07374-S-PP	226	472	IPP	24	–
MM07552-S-AP	223	431	IPP	13	–
MM07552-S-PP	226	482	IPP	24	–
MM08554-S-AP	223	466	IPP	19	–
MPM3458	203	644	FD1	20	3413M
MVM06124D-S-AP	224	421	IPP	9	–
MVM06182C-S-AP	225	413	IPP	9	–
MVM06182D-S-AP	224	413	IPP	9	–
MVM06184C-S-AP	225	425	IPP	10	–
MVM06184D-S-AP	224	425	IPP	10	–
MVM06252C-S-AP	225	419	IPP	10	–
MVM06252D-S-AP	224	419	IPP	10	–
MVM07254C-S-AP	225	444	IPP	11	–
MVM07254D-S-AP	224	444	IPP	11	–
MVM07372C-S-AP	225	458	IPP	11	–
MVM07372D-S-AP	224	458	IPP	11	–
MVM07374C-S-AP	225	497	IPP	11	–
MVM07374D-S-AP	224	497	IPP	11	–
MVM07552C-S-AP	225	505	IPP	11	–
MVM07552D-S-AP	224	505	IPP	11	–
MVM08554C-S-AP	225	540	IPP	19	–
MVM08554D-S-AP	224	540	IPP	19	–
MVM3458C	236	837	BIM	22	3320M
MVM3458D	235	953	BIM	20	3320M
MVM3460C	236	891	BIM	22	3320M
MVM3461C	236	940	BIM	22	3320M
MVM3461D	235	958	BIM	20	3320M
MVM3463C	236	927	BIM	26	3328M
MVM3542C	236	986	BIM	26	3420M
MVM3542D	235	1,011	BIM	27	3420M
NM3454	23	537	GE3	20	3413M
NM3455	23	741	GE3	19	3411M
NM3534	23	601	GE3	23	3416M
NM3538	23	697	GE3	25	3420M
NM3539	23	1,060	GE3	40	3524M
NM3542	23	749	GE3	29	3514M
PCL1327M	208	1,490	DPS	57	3535LC
PCL3513M	208	1,174	DPS	38	3520LC
PCL3514M	208	1,531	DPS	54	3535LC
PCL3515M	208	1,393	DPS	43	3524LC
PCL3519M	208	1,526	DPS	52	3532LC
PL1327M	208	1,414	DPS	56	3535LC
PL3515M	208	1,327	DPS	42	3524LC
PL3519M	208	1,456	DPS	50	3532LC
PSC3413A	189	659	HV1	19	3411C
PSC3416A	189	731	HV1	21	3414C
PSC3524A	189	802	HV1	24	3418C
PTG1024LD	286	2,660	R3B	1	–
R1	322	116	SVC	1	–
R2	322	57	SVC	1	–
R5A	322	191	SVC	1	3418C
R6	322	64	SVC	1	–
RL1209A	188	548	HV1	27	3420L
RL1301A277	188	734	HV1	23	3414L
RL1304A	188	715	HV1	26	3418L
RL1304A277	188	764	HV1	26	3418L
RL1307A	188	876	HV1	34	3428L
RL1307A277	188	1,052	HV1	34	3428L
RL1310A	188	952	HV1	34	3520L
RL1310A277	188	1,082	HV1	42	3528L

Catalog Number	Page Number	List Price	Disc. Sym.	Ship Wgt[1]	Type Code
RL1323A	188	650	HV1	24	3416L
RL1324A	188	705	HV1	31	3424L
RM3007A	189	529	HV3	21	3413M
RM3108A	189	802	HV3	25	3413M
RM3112A	189	863	HV3	32	3420M
RM3116A	189	899	HV3	32	3424M
RM3154A	189	955	HV3	34	3520M
RM3157A	189	1,095	HV3	40	3524M
S46	316	173	SVC	3	–
S61	316	173	SVC	3	–
SSEWDM07186-B	89, 230	2,977	IFS	33	–
SSEWDM07186C-B	90, 231	2,803	IFS	33	–
SSEWDM07186D-B	89, 230	2,803	IFS	33	–
SSEWDM07254-B	89, 230	2,939	IFS	44	–
SSEWDM07254C-B	90, 231	2,761	IFS	44	–
SSEWDM07254D-B	89, 230	2,761	IFS	44	–
SSEWDM07256-B	89, 230	3,113	IFS	35	–
SSEWDM07256C-B	90, 231	2,943	IFS	35	–
SSEWDM07256D-B	89, 230	2,943	IFS	35	–
SSEWDM08112-B	89, 230	3,219	IFS	51	–
SSEWDM08112C-B	90, 231	3,034	IFS	51	–
SSEWDM08112D-B	90, 231	3,034	IFS	51	–
SSEWDM08374-B	89, 230	2,977	IFS	51	–
SSEWDM08374C-B	90, 231	2,803	IFS	51	–
SSEWDM08374D-B	89, 230	2,803	IFS	51	–
SSEWDM08376-B	89, 230	3,219	IFS	51	–
SSEWDM08376C-B	90, 231	3,034	IFS	51	–
SSEWDM08376D-B	89, 230	3,034	IFS	51	–
SSEWDM08552-B	89, 230	2,977	IFS	51	–
SSEWDM08552C-B	90, 231	2,803	IFS	51	–
SSEWDM08552D-B	89, 230	2,803	IFS	51	–
SSEWDM08554-B	89, 230	3,113	IFS	51	–
SSEWDM08554C-B	90, 231	2,943	IFS	51	–
SSEWDM08554D-B	89, 230	2,943	IFS	51	–
SSEWDM08752-B	89, 230	3,113	IFS	51	–
SSEWDM08752C-B	90, 231	2,943	IFS	51	–
SSEWDM08752D-B	90, 231	2,943	IFS	51	–
SSEWDM08754-B	89, 230	3,219	IFS	51	–
SSEWDM08754C-B	90, 231	3,034	IFS	51	–
SSEWDM08754D-B	90, 231	3,034	IFS	51	–
SSEWDM09114-B	89, 230	3,541	IFS	106	–
SSEWDM09114C-B	90, 231	3,333	IFS	106	–
SSEWDM09114D-B	90, 231	3,333	IFS	106	–
SSEWDM09152-B	89, 230	3,929	IFS	115	–
SSEWDM09152C-B	90, 231	3,687	IFS	115	–
SSEWDM09152D-B	90, 231	3,687	IFS	115	–
SSEWDM09154-B	89, 230	3,891	IFS	115	–
SSEWDM09154C-B	90, 231	3,642	IFS	115	–
SSEWDM09154D-B	90, 231	3,642	IFS	121	–
SSEWDM09222-B	89, 230	4,119	IFS	115	–
SSEWDM09222C-B	90, 231	3,891	IFS	115	–
SSEWDM09222D-B	90, 231	3,891	IFS	115	–
SSEWDM09556-B	89, 230	3,541	IFS	106	–
SSEWDM09556C-B	90, 231	3,333	IFS	106	–
SSEWDM09556D-B	89, 230	3,333	IFS	106	–
SSEWDM09756-B	89, 230	3,891	IFS	115	–
SSEWDM09756C-B	90, 231	3,642	IFS	115	–
SSEWDM09756D-B	90, 231	3,642	IFS	115	–
SSEWDM10032-B	89, 230	5,441	IFS	145	–
SSEWDM10032C-B	90, 231	5,138	IFS	133	–
SSEWDM10032D-B	90, 231	5,138	IFS	133	–
SSEWDM10034-B	89, 230	5,441	IFS	126	–
SSEWDM10034C-B	90, 231	5,138	IFS	126	–
SSEWDM10034D-B	90, 231	5,138	IFS	126	–
SSEWDM10156-B	89, 230	5,441	IFS	128	–
SSEWDM10156C-B	90, 231	5,138	IFS	128	–
SSEWDM10156D-B	90, 231	5,138	IFS	128	–
SSEWDM10224-B	89, 230	4,986	IFS	126	–

[1] Shipping weight (lbs.) is approximate.

Index

Catalog Number	Page Number	List Price	Disc. Sym.	Ship Wgt(1)	Type Code
SSEWDM10224C-B	90, 231	4,685	IFS	126	–
SSEWDM10224D-B	90, 231	4,685	IFS	170	–
SSEWDM11042-B	89, 230	6,196	IFS	134	–
SSEWDM11042C-B	90, 231	5,855	IFS	134	–
SSEWDM11042D-B	90, 231	5,855	IFS	134	–
SSEWDM11044-B	89, 230	6,196	IFS	134	–
SSEWDM11044C-B	90, 231	5,855	IFS	134	–
SSEWDM11044D-B	90, 231	5,855	IFS	134	–
SSEWDM11226-B	89, 230	6,196	IFS	130	–
SSEWDM11226C-B	90, 231	5,855	IFS	130	–
SSEWDM11226D-B	90, 231	5,855	IFS	130	–
SSEWDM13036-B	89, 230	7,254	IFS	148	–
SSEWDM13036C-B	90, 231	6,801	IFS	148	–
SSEWDM13036D-B	90, 231	6,801	IFS	148	–
SSEWDM13046-B	89, 230	7,632	IFS	148	–
SSEWDM13046C-B	90, 231	7,216	IFS	148	–
SSEWDM13046D-B	90, 231	7,216	IFS	148	–
SSEWDM13552-B	89, 230	7,254	IFS	152	–
SSEWDM13552C-B	90, 231	6,801	IFS	152	–
SSEWDM13552D-B	90, 231	6,801	IFS	152	–
SSEWDM13554-B	89, 230	7,254	IFS	161	–
SSEWDM13554C-B	90, 231	6,801	IFS	161	–
SSEWDM13554D-B	90, 231	6,801	IFS	161	–
SSEWDM13752-B	89, 230	7,632	IFS	165	–
SSEWDM13752C-B	90, 231	7,216	IFS	165	–
SSEWDM13752D-B	90, 231	7,216	IFS	165	–
SSEWDM13754-B	89, 230	7,632	IFS	181	–
SSEWDM13754C-B	90, 231	7,216	IFS	181	–
SSEWDM13754D-B	90, 231	7,216	IFS	181	–
SUL50104SM	159	8,358	SU1	240	–
SUL50106SM	159	8,785	SU1	240	–
SUL50154SM	159	8,358	SU1	291	–
SUL50156SM	159	10,166	SU1	256	–
SUL50204SM	159	9,358	SU1	250	–
SUL50304	159	11,912	SU1	256	–
SUL50304SM	159	11,912	SU1	270	–
SUL50306SM	159	14,288	SU1	315	–
SUL50504	159	15,638	SU1	369	–
SUM20754	161	7,334	SU3	335	–
SUM20754-4	161	7,334	SU3	340	–
SUM21004	161	8,554	SU3	351	–
SUM21004-4	161	8,554	SU3	367	–
SUM21504	161	11,093	SU3	368	–
SUM21504-4	161	11,093	SU3	377	–
SUM70104SM	160	6,917	SU3	169	–
SUM70154SM	160	7,117	SU3	175	–
SUM70204SM	160	7,274	SU3	183	–
SUM70204SM-8	160	7,274	SU3	182	–
SUM70304SM	160	7,367	SU3	200	–
SUM70306	160	7,507	SU3	235	–
SUM70504	160	7,735	SU3	240	–
SUM70504-4	160	7,735	SU3	235	–
SUM70504-8	160	7,735	SU3	235	–
SUM70504SM-4	160	7,735	SU3	235	–
SUM70506	160	10,631	SU3	225	–
SUM70754	160	10,003	SU3	243	–
SUM70754-4	160	10,003	SU3	245	–
SUM70754SM-4	160	10,003	SU3	245	–
SUM70756	160	11,378	SU3	350	–
SUM70756-4	160	11,378	SU3	350	–
SUM710004-4	161	60,201	SU3	1340	–
SUM710006-4	161	74,411	SU3	1500	–
SUM71004	160	10,377	SU3	356	–
SUM71004-4	160	10,377	SU3	356	–
SUM71004SM-4	160	10,377	SU3	356	–
SUM71006	160	14,310	SU3	391	–
SUM71006-4	160	14,310	SU3	391	–
SUM71504	160	13,650	SU3	376	–
SUM71504-4	160	13,650	SU3	374	–
SUM71504SM-4	160	13,650	SU3	374	–
SUM71506-4	160	19,336	SU3	750	–
SUM72004-4	160	16,164	SU3	407	–
SUM72004SM-4	160	15,241	SU3	378	–
SUM72006-4	160	21,322	SU3	474	–
SUM72504-4	160	19,953	SU3	495	–
SUM72504SM-4	160	19,953	SU3	517	–
SUM72506-4	160	27,666	SU3	496	–
SUM72506SM-4	160	27,666	SU3	496	–
SUM73004-4	161	21,552	SU3	520	–
SUM73004SM-4	161	21,552	SU3	445	–
SUM73006-4	161	33,199	SU3	1150	–
SUM74004-4	161	29,178	SU3	542	–
SUM75004-4	161	34,146	SU3	950	–
SUM75004SM-4	161	34,146	SU3	880	–
SUM75006-4	161	37,029	SU3	872	–
SUM76004-4	161	43,672	SU3	950	–
SUM77504-4	161	56,619	SU3	956	–
SUM77506-4	161	57,893	SU3	1374	–
TK3300	287	245	SVC	1	–
TK3400	287	434	SVC	4	–
TK3500	287	457	SVC	9	–
TK3600PM	287	604	SVC	3	–
TKP2136XPT	285	3,098	SVC	13	–
TKP500XP	285	3,219	SVC	3	–
UCC10150	199	3,934	FD1	127	3740C
UCC5700	199	1,894	FD1	74	3634C
UCC7100	199	2,081	FD1	78	3640C
UCL1015	198	3,675	FD1	137	3744LC
UCL3145	198	1,717	FD1	59	3540LC
UCL345	198	1,788	FD1	72	3634L
UCL570	198	2,113	FD1	91	3646L
UCL710	198	2,266	FD1	89	3646LC
UCL7510	198	2,868	FD1	107	3729L
UCLE1015	198	3,708	FD1	167	3750LC
UCLE153	198	1,775	FD1	52	3532LC
UCLE3145	198	1,818	FD1	61	3540LC
UCLE570	198	2,213	FD1	93	3646LC
UCLE7510	198	2,393	FD1	95	3646LC
UCM1014	198	2,402	FD3	102	3726M
UCM575	198	1,563	FD3	66	3628M
UCM713	198	1,869	FD3	89	3646M
UCME1014	198	2,482	FD3	124	3734M
UCME153	198	1,248	FD3	39	3524M
UCME3145	198	1,319	FD3	46	3528M
UCME570	198	1,657	FD3	69	3628M
UCME7510	198	1,943	FD3	85	3640M
UCME759	198	1,943	FD3	84	3640M
VAOM3527	191	1,314	HV3	57	3546M
VAOM3560	191	1,108	HV3	50	3528M
VBL3507	216	2,442	BE1	40	3428LC
VBL3510	216	2,587	BE1	49	3522LC
VBL3510T	216	2,587	BE1	49	3522LC
VBM3108	220	1,576	BO3	28	3416M
VBM3112	220	1,831	BO3	31	3420M
VBM3116	220	1,994	BO3	33	3424M
VBM3154	220	2,317	BO3	44	3518M
VBM3218T	220	4,431	BO3	84	3630M
VBM3538	217	1,673	BE3	30	3420M
VBM3538-5S	215	1,941	UH3	42	3512M
VBM3538-D	214	2,045	UH3	46	3512M
VBM3538-S	215	1,941	UH3	41	3512M
VBM3542	217	1,960	BE3	35	3428M
VBM3542-5	217	1,960	BE3	40	3516M
VBM3542-D	214	2,123	UH3	52	3514M
VBM3542-S	215	2,019	UH3	47	3514M
VBNM3538-D	214	2,091	UH3	44	3512M
VBNM3542-D	214	2,172	UH3	48	3514M
VDM3537	65	981	SDD	25	3414M

(1) Shipping weight (lbs.) is approximate.

Index

Catalog Number	Page Number	List Price	Disc. Sym.	Ship Wgt(1)	Type Code
VDM3538	65	1,015	SDD	28	3420M
VDM3541	65	1,037	SDD	27	3418M
VDM3542	65	1,056	SDD	31	3428M
VDRX050544	125	1,764	XDM	37	3512M
VDRX050744	125	1,928	XDM	37	3514M
VDRX05144	125	2,557	XDM	41	3520M
VDRX051544	125	2,595	XDM	46	3526M
VDRX14144T	125	2,570	XDM	50	3520M
VDRX141544T	125	2,608	XDM	46	3526M
VDRX14244T	125	2,673	XDM	59	3528M
VDRX18344T	125	3,254	XDM	127	0632M
VDRX18544T	125	3,766	XDM	123	0642M
VDRX21144T	125	6,228	XDM	252	0750M
VDRX21744T	125	4,680	XDM	228	0738M
VDRX251544T	125	7,476	XDM	373	0944M
VDRX25244T	125	9,374	XDM	335	0960M
VDRX282544T	125	11,453	XDM	506	1054M
VDRX28344T	125	13,666	XDM	518	1056M
VDRX32444T	125	18,100	XDM	720	1254M
VDRX32544T	125	20,753	XDM	782	1276M
VEBM3116T	220	2,541	BO3	44	3520M
VEBM3154T	220	2,654	BO3	44	3522M
VEBM3157T	220	2,745	BO3	50	3526M
VEBM3211T	220	3,148	BO3	81	3630M
VEBM3218T	220	3,787	BO3	100	3640M
VEBM3218T-DI	219	3,787	BO3	122	3640M
VEBM3248T	220	3,288	BO3	99	3640M
VEBM3542-D	214	2,330	UH3	50	3516M
VEBM3546	217	2,256	BE3	45	3520M
VEBM3546-5S	215	2,259	UH3	51	3520M
VEBM3546-D	214	2,424	UH3	54	3520M
VEBM3546-S	215	2,259	UH3	51	3520M
VEBM3546T	217	2,587	BE3	45	3520M
VEBM3546T-5	217	2,587	BE3	44	3520M
VEBM3546T-5D	214	2,603	UH3	52	3520M
VEBM3546T-D	214	2,603	UH3	51	3520M
VEBM3546T-S	215	2,277	UH3	51	3520M
VEBM3554	217	2,709	BE3	53	3526M
VEBM3554-D	214	2,524	UH3	58	3526M
VEBM3554-S	215	2,449	UH3	54	3526M
VEBM3554T	217	2,786	BE3	52	3526M
VEBM3554T-5	217	2,786	BE3	52	3526M
VEBM3554T-5D	214	2,709	UH3	55	3526M
VEBM3554T-5S	215	2,465	UH3	54	3526M
VEBM3554T-D	214	2,709	UH3	58	3526M
VEBM3554T-S	215	2,465	UH3	54	3526M
VEBM3558	217	2,789	BE3	56	3528M
VEBM3558-D	214	2,752	UH3	57	3528M
VEBM3558-S	215	2,528	UH3	58	3528M
VEBM3558T	217	2,865	BE3	57	3528M
VEBM3558T-5	217	2,865	BE3	57	3528M
VEBM3558T-5D	214	2,766	UH3	62	3528M
VEBM3558T-D	214	2,766	UH3	62	3528M
VEBM3558T-S	215	2,544	UH3	58	3528M
VEBM3611T	217	3,203	BE3	80	3632M
VEBM3611T-5	217	3,203	BE3	82	3628M
VEBM3611T-5D	214	3,652	UH3	101	3628M
VEBM3611T-D	214	3,652	UH3	101	3632M
VEBM3611T-S	215	3,046	UH3	83	3632M
VEBM3615T	217	3,753	BE3	99	3642M
VEBM3615T-5D	214	4,403	UH3	117	3640M
VEBM3615T-D	214	4,403	UH3	117	3642M
VEBM3615T-DI	219	3,753	BE3	125	3642M
VEBM3615T-S	215	3,544	UH3	106	3642M
VEBM3710T	217	6,881	BE3	172	3738M
VEBM3710T-D	214	5,996	UH3	151	3738M
VEBM3714T	217	7,504	BE3	165	3752M
VEBM3714T-D	214	6,952	UH3	177	3752M

Catalog Number	Page Number	List Price	Disc. Sym.	Ship Wgt(1)	Type Code
VEBNM3538	217	2,361	BE3	37	3516M
VEBNM3542	217, 221	2,654	BE3	53	3516M
VEBNM3546-D	214	2,445	UH3	51	3524M
VEBNM3554T-D	214	2,654	UH3	62	3534M
VECP2276T	56	5,332	SDM	338	0954M
VECP2332T	56	6,674	SDM	348	0960M
VECP2333T	56	5,154	SDM	314	0944M
VECP2333T-4	56	5,154	SDM	303	0944M
VECP2334T	56	5,464	SDM	338	0960M
VECP2334T-4	56	5,464	SDM	365	0960M
VECP3580-4	56	1,573	SDM	60	0516M
VECP3581	56	1,720	SDM	66	0524M
VECP3581-4	56	1,720	SDM	66	0524M
VECP3581T	56	1,720	SDM	67	0524M
VECP3581T-4	56	1,720	SDM	66	0524M
VECP3582T	56	1,894	SDM	69	0526M
VECP3583T-4	56	1,775	SDM	67	0524M
VECP3584T	56	1,748	SDM	71	0530M
VECP3584T-4	56	1,748	SDM	70	0530M
VECP3586T-4	56	1,858	SDM	74	0532M
VECP3587T	56	1,820	SDM	75	0534M
VECP3587T-4	56	1,820	SDM	75	0534M
VECP3660T-4	56	2,230	SDM	103	0628M
VECP3661T	56	2,337	SDM	112	0632M
VECP3661T-4	56	2,337	SDM	105	0632M
VECP3663T-4	56	2,715	SDM	108	0634M
VECP3664T	56	2,281	SDM	114	0642M
VECP3665T	56	2,378	SDM	119	0642M
VECP3665T-4	56	2,378	SDM	119	0642M
VECP3667T	56	2,249	SDM	103	0630M
VECP3764T	56	3,364	SDM	165	0738M
VECP3768T	56	3,403	SDM	225	0748M
VECP3769T-4	56	3,636	SDM	173	0732M
VECP3770T	56	3,090	SDM	170	0738M
VECP3770T-4	56	3,090	SDM	170	0738M
VECP3771T-4	56	3,851	SDM	203	0742M
VECP3774T	56	3,650	SDM	231	0748M
VECP3774T-4	56	3,650	SDM	231	0748M
VECP4100T	56	7,869	SDM	503	1046M
VECP4102T	56	10,270	SDM	528	1054M
VECP4103T	56	7,234	SDM	483	1054M
VECP4111T	56	10,809	SDM	636	1260M
VECP82333T-4	61	5,215	SD8	324	0944M
VECP82334T-4	61	5,528	SD8	355	0964M
VECP82394T-4	61	5,349	SD8	304	0934M
VECP83583T-4	61	1,812	SD8	75	0524M
VECP83584T-4	61	1,885	SD8	76	0530M
VECP83586T-4	61	1,987	SD8	83	0526M
VECP83587T-4	61	1,965	SD8	79	0534M
VECP83660T-4	61	2,414	SD8	121	0632M
VECP83661T-4	61	2,559	SD8	117	0632M
VECP83663T-4	61	2,941	SD8	132	0642M
VECP83665T-4	61	2,573	SD8	128	0642M
VECP83769T-4	61	3,794	SD8	179	0732M
VECP83770T-4	61	3,241	SD8	211	0740M
VECP83771T-4	61	4,029	SD8	225	0742M
VECP83774T-4	61	3,928	SD8	231	0748M
VECP84106T-4	61	6,097	SD8	319	0954M
VEDM3545	65	1,426	SDD	28	3420M
VEDM3546	65	1,578	SDD	37	3520M
VEDM3550	65	1,559	SDD	44	3520M
VEDM3554	65	1,707	SDD	42	3526M
VEDM3555	65	1,707	SDD	41	3526M
VEDM3555T	65	1,833	SDD	41	3526M
VEDM3558	65	1,781	SDD	47	3528M
VEDM3558T	65	1,797	SDD	47	3528M
VEDM3559T	65	1,891	SDD	50	3532M
VEDM3611T	65	1,984	SDD	86	3632M

(1) Shipping weight (lbs.) is approximate.

Index

Catalog Number	Page Number	List Price	Disc. Sym.	Ship Wgt(1)	Type Code
VEDM3615T	65	2,029	SDD	91	3642M
VEDM3710T	65	3,018	SDD	131	3738M
VEDM3714T	65	3,287	SDD	147	3752M
VEFWDM3546	101	1,749	WDW	38	3520M
VEFWDM3546T	101	1,762	WDW	36	3520M
VEFWDM3554T	101	1,890	WDW	43	3526M
VEJMM2333T	149	5,429	PC3	278	0944M
VEJMM2333T-5	149	4,973	PC3	255	0944M
VEJMM2334T	149	5,780	PC3	303	0960M
VEJMM2334T-5	149	5,780	PC3	303	0960M
VEJMM3116T	151	1,164	PC3	37	3520M
VEJMM3116T-5	151	1,164	PC3	44	3524M
VEJMM3154T	151	1,248	PC3	43	3522M
VEJMM3154T-5	151	1,248	PC3	51	3530M
VEJMM3157T	151	1,365	PC3	46	3526M
VEJMM3157T-5	151	1,365	PC3	52	3532M
VEJMM3158T	151	1,446	PC3	48	3528M
VEJMM3211T	151	1,498	PC3	74	3630M
VEJMM3211T-5	151	1,498	PC3	74	3628M
VEJMM3212T	151	1,729	PC3	63	3622M
VEJMM3218T	151	1,696	PC3	84	3640M
VEJMM3218T-5	151	1,696	PC3	77	3632M
VEJMM3219T	151	2,495	PC3	77	3632M
VEJMM3311T	151	2,559	PC3	125	3734M
VEJMM3312T	151	2,921	PC3	121	3728M
VEJMM3313T	151	2,770	PC3	165	3742M
VEJMM3314T	151	3,917	PC3	131	3734M
VEJMM3546T	149	1,138	PC3	38	3520M
VEJMM3546T-5	149	1,464	PC3	38	3520M
VEJMM3554T	149	1,200	PC3	45	3526M
VEJMM3554T-5	149	1,599	PC3	41	3526M
VEJMM3558T	149	1,438	PC3	44	3528M
VEJMM3558T-5	149	1,676	PC3	45	3528M
VEJMM3611T	149	1,640	PC3	74	3632M
VEJMM3611T-5	149	1,887	PC3	70	3632M
VEJMM3615T	149	1,935	PC3	90	3642M
VEJMM3615T-5	149	1,935	PC3	93	3642M
VEJMM3709T	149	2,962	PC3	121	3728M
VEJMM3710T	149	2,770	PC3	136	3738M
VEJMM3710T-5	149	2,733	PC3	127	3738M
VEJMM3714T	149	3,208	PC3	165	3752M
VEJMM3714T-5	149	3,015	PC3	165	3752M
VEL11301	22	779	GO1	27	3418LC
VEL11301A	22	823	GO1	27	3418LC
VEL11303	22	812	GO1	24	3413LC
VEL11303A	22	823	GO1	24	–
VEL11304	22	868	GO1	32	3424LC
VEL11304A	22	912	GO1	32	3424LC
VEL11305	22	1,345	GO1	42	3526LC
VEL11306	22	846	GO1	39	3428LC
VEL11306A	22	891	GO1	39	–
VEL11307	22	1,024	GO1	44	3524LC
VEL11307A	22	1,069	GO1	39	3524LC
VEL11308	22	1,508	GO1	47	3530LC
VEL11309	22	985	GO1	43	3524LC
VEL11309A	22	1,029	GO1	43	–
VEL11313	22	1,113	GO1	52	3532LC
VEL11313A	22	1,158	GO1	52	–
VEL11317	22	1,223	GO1	66	3540LC
VEL11317A	22	1,268	GO1	66	–
VEL11318	22	1,172	GO1	44	3528LC
VEL11318A	22	1,217	GO1	44	3528LC
VEL11319	22	1,386	GO1	59	3540LC
VEM2332T	32	5,750	GE3	322	0960M
VEM2333T	32	4,757	GE3	268	0944M
VEM2333T-5	33	4,757	GE3	266	0944M
VEM2334T	32	5,564	GE3	303	0960M
VEM2334T-5	33	5,564	GE3	296	0960M
VEM2394T	32	5,110	GE3	225	0750M

Catalog Number	Page Number	List Price	Disc. Sym.	Ship Wgt(1)	Type Code
VEM2513T	40	4,433	GO3	234	3948M
VEM2514T	40	4,490	GO3	185	3928M
VEM2515T	40	4,812	GO3	220	3948M
VEM2516T	40	5,284	GO3	233	3938M
VEM2531T	40	6,173	GO3	377	4050M
VEM2534T	40	6,565	GO3	320	4040M
VEM31104	40	789	GO3	24	3416M
VEM31107	40	840	GO3	24	3416M
VEM31108	40	865	GO3	31	3424M
VEM31109	40	940	GO3	34	3428M
VEM31111	40	837	GO3	25	3416M
VEM31112	40	947	GO3	32	3516M
VEM31115	40	856	GO3	27	3420M
VEM31116	40	995	GO3	37	3520M
VEM31120	40	883	GO3	34	3518M
VEM31153	40	1,146	GO3	39	3524M
VEM31154	40	1,085	GO3	35	3526M
VEM31155	40	1,153	GO3	43	3524M
VEM31157	40	1,136	GO3	48	3526M
VEM31158	40	1,102	GO3	50	3528M
VEM3116T	40	1,233	GO3	38	3520M
VEM3120T	40	1,070	GO3	34	3518M
VEM3154T	40	1,286	GO3	37	3522M
VEM3155T	40	1,245	GO3	43	3524M
VEM3156T	40	1,260	GO3	39	3524M
VEM3157T	40	1,220	GO3	43	3526M
VEM3158T	40	1,260	GO3	50	3528M
VEM3159T	40	1,464	GO3	68	3628M
VEM3161T	40	1,307	GO3	74	3630M
VEM3211T	40	1,531	GO3	74	3630M
VEM3212T	40	1,426	GO3	64	3544M
VEM3215T	40	1,551	GO3	82	3636M
VEM3218T	40	1,666	GO3	92	3640M
VEM3219T	40	2,192	GO3	77	3632M
VEM3305T	40	2,090	GO3	137	3734M
VEM3309T	40	2,656	GO3	141	3744M
VEM3311T	40	2,541	GO3	120	3734M
VEM3312T	40	2,638	GO3	121	3728M
VEM3313T	40	3,020	GO3	132	3742M
VEM3314T	40	3,634	GO3	131	3734M
VEM3538	31	1,016	GE3	31	3512M
VEM3538-5	32	1,016	GE3	32	3516M
VEM3542	31	1,079	GE3	35	3514M
VEM3542-5	32	1,079	GE3	33	3516M
VEM3545	31	1,102	GE3	32	3516M
VEM3545-5	32	1,102	GE3	27	3516M
VEM3545-57	239	1,039	5E3	35	3516M
VEM3546	31	1,120	GE3	36	3520M
VEM3546-5	32	1,120	GE3	35	3520M
VEM3546-57	239	1,029	5E3	34	3518M
VEM3546T	31	1,135	GE3	36	3520M
VEM3546T-5	32	1,135	GE3	36	3520M
VEM3546T-57	239	1,029	5E3	34	3518M
VEM3550	31	1,242	GE3	35	3520M
VEM3550-5	32	1,242	GE3	38	3520M
VEM3550T	31	1,258	GE3	38	3520M
VEM3550T-5	32	1,258	GE3	35	3520M
VEM3550T-57	239	1,130	5E3	43	3524M
VEM3554	31	1,240	GE3	42	3526M
VEM3554-5	32	1,240	GE3	50	3534M
VEM3554T	31	1,255	GE3	41	3526M
VEM3554T-5	32	1,255	GE3	41	3526M
VEM3554T-57	239	1,069	5E3	41	3526M
VEM3555	32	1,355	GE3	43	3526M
VEM3555-5	32	1,355	GE3	41	3526M
VEM3555-57	239	1,121	5E3	50	3532M
VEM3555T	32	1,372	GE3	41	3526M
VEM3555T-57	239	1,233	5E3	50	3532M
VEM3556	31	1,439	GE3	43	3526M

(1) Shipping weight (lbs.) is approximate.

Index

Catalog Number	Page Number	List Price	Disc. Sym.	Ship Wgt[1]	Type Code
VEM3556T	31	1,456	GE3	41	3526M
VEM3557	31	1,487	GE3	72	3632M
VEM3557T	31	1,503	GE3	72	3632M
VEM3558	32	1,309	GE3	46	3528M
VEM3558-5	32	1,309	GE3	45	3528M
VEM3558T	32	1,324	GE3	47	3528M
VEM3558T-5	32	1,324	GE3	46	3528M
VEM3558T-57	239	1,133	5E3	45	3528M
VEM3559	32	1,480	GE3	50	3532M
VEM3559-5	33	1,480	GE3	50	3532M
VEM3559T	32	1,497	GE3	50	3532M
VEM3561	32	1,429	GE3	70	3632M
VEM3561T	32	1,446	GE3	70	3632M
VEM3581	31	1,610	GE3	52	0518M
VEM3581T	31	1,610	GE3	54	0518M
VEM3581T-5	32	1,610	GE3	53	0518M
VEM3584T	31	1,666	GE3	60	0526M
VEM3584T-5	32	1,666	GE3	58	0526M
VEM3587T	32	1,742	GE3	59	0528M
VEM3587T-5	32	1,742	GE3	60	0528M
VEM3609	209	2,378	DPL	45	3528M
VEM3610T	32	1,571	GE3	50	3532M
VEM3610T-5	33	1,571	GE3	53	3532M
VEM3611	209	2,458	DPL	70	3632M
VEM3611T	32	1,406	GE3	73	3632M
VEM3611T-5	33	1,406	GE3	71	3632M
VEM3613	209	2,208	DPL	74	3630M
VEM3613T	32	1,729	GE3	75	3630M
VEM3613T-5	33	1,729	GE3	74	3630M
VEM3614	209	2,687	DPL	97	3644M
VEM3614T	32	1,826	GE3	91	3646M
VEM3615	209	2,806	DPL	93	3642M
VEM3615T	32	1,449	GE3	88	3642M
VEM3615T-5	33	1,449	GE3	88	3642M
VEM3616T	32	2,243	GE3	96	3646M
VEM3661T	32	2,019	GE3	98	0632M
VEM3661T-5	33	2,019	GE3	98	0632M
VEM3663T	32	2,384	GE3	99	0628M
VEM3664T	32	2,200	GE3	113	0642M
VEM3665T	32	2,062	GE3	109	0642M
VEM3665T-5	33	2,062	GE3	110	0642M
VEM3704T	32	2,450	GE3	132	3738M
VEM3708T	32	2,738	GE3	149	3752M
VEM3709T	32	2,641	GE3	96	3646M
VEM3709T-5	33	2,641	GE3	101	3646M
VEM3710T	32	2,412	GE3	129	3738M
VEM3710T-5	33	2,412	GE3	123	3738M
VEM3711T	32	2,674	GE3	125	3732M
VEM3711T-5	33	2,674	GE3	118	3728M
VEM3713T	32	3,679	GE3	170	3752M
VEM3713T-5	33	3,679	GE3	169	3752M
VEM3714T	32	2,694	GE3	165	3752M
VEM3714T-5	33	2,694	GE3	165	3752M
VEM3770T	32	2,799	GE3	170	0738M
VEM3770T-5	33	2,799	GE3	170	0738M
VEM3774T	32	3,101	GE3	197	0748M
VEM3774T-5	33	3,101	GE3	231	0748M
VEM4103T	32	7,296	GE3	512	1054M
VEM4104T	32	8,418	GE3	286	1056M
VEM4106T	32	5,515	GE3	229	0936M
VEM4107T	32	7,217	GE3	283	0944M
VEM4108T	32	8,335	GE3	299	0950M
VENCP83580T-4	61	1,548	SD8	59	0520M
VENCP83581T-4	61	1,671	SD8	63	0524M
VENM3538	31	1,056	GE3	32	3516M
VENM3542	31	1,153	GE3	33	3516M
VENM3546	31	1,261	GE3	38	3524M
VENM3546T	31	1,278	GE3	40	3524M

Catalog Number	Page Number	List Price	Disc. Sym.	Ship Wgt[1]	Type Code
VENM3581T	31	1,610	GE3	56	0524M
VESSFWDM3546	93	2,485	WDS	39	3524M
VESSWDM3546	93	2,254	WDS	44	3524M
VESSWDM3546-5	93	2,254	WDS	39	3524M
VESSWDM3546T	93	2,289	WDS	44	3524M
VESSWDM3554	93	2,299	WDS	46	3526M
VESSWDM3554T	93	2,333	WDS	45	3528M
VESSWDM3554T-5	93	2,333	WDS	45	3528M
VESSWDM3555-5	93	2,725	WDS	41	3532M
VESSWDM3558	93	2,781	WDS	48	3528M
VESSWDM3558T	93	2,816	WDS	45	3528M
VESSWDM3558T-5	93	2,816	WDS	56	3538M
VESSWDM3559T	93	3,346	WDS	64	3546M
VESSWDM3611T	93	3,213	WDS	60	3636M
VESSWDM3611T-5	93	3,213	WDS	83	3636M
VESSWDM3613T	93	3,761	WDS	83	3636M
VESSWDM3615T	93	3,634	WDS	101	3646M
VESSWDM3615T-5	93	3,634	WDS	112	–
VESSWDM3710T	93	4,601	WDS	139	3740M
VESSWDM3714T	93	5,088	WDS	188	3756M
VESSWDM3714T-5	93	5,088	WDS	191	3756M
VESWDM3546	94	1,803	WDP	39	3524M
VESWDM3546-5	95	1,803	WDP	39	3524M
VESWDM3546T	94	1,810	WDP	43	3524M
VESWDM3546T-5	95	1,810	WDP	39	3524M
VESWDM3554	94	1,963	WDP	47	3534M
VESWDM3554-5	95	1,963	WDP	57	3534M
VESWDM3554T	94	1,963	WDP	49	3534M
VESWDM3554T-5	95	1,963	WDP	47	3534M
VESWDM3558T	94	2,241	WDP	55	3536M
VESWDNM3558T-5	95	2,235	WDP	62	3538M
VEUHM3538	212	1,000	UH3	33	3514M
VEUHM3542	212	1,062	UH3	35	3516M
VEUHM3546	212	1,093	UH3	38	3520M
VEUHM3546-5	212	1,093	UH3	38	3520M
VEUHM3546T	212	1,113	UH3	38	3520M
VEUHM3546T-5	212	1,113	UH3	38	3520M
VEUHM3554	212	1,391	UH3	41	3526M
VEUHM3554T	212	1,163	UH3	43	3526M
VEUHM3554T-5	212	1,163	UH3	44	3526M
VEUHM3558	212	1,467	UH3	45	3528M
VEUHM3558T	212	1,291	UH3	48	3528M
VEUHM3558T-5	212	1,291	UH3	48	3528M
VEUHM3611T	212	1,467	UH3	73	3632M
VEUHM3615T	212	1,614	UH3	88	3642M
VEUHM3710T	212	2,379	UH3	151	3738M
VEWDM3538	101	1,429	WDW	32	3516M
VEWDM3542	101	1,573	WDW	32	3516M
VEWDM3546	101	1,703	WDW	40	3524M
VEWDM3546T	101	1,716	WDW	40	3524M
VEWDM3554	101	1,828	WDW	48	3534M
VEWDM3554T	101	1,843	WDW	48	3534M
VEWDM3558	101	1,945	WDW	46	3528M
VEWDM3558T	101	1,983	WDW	47	3528M
VEWDM3559	101	2,253	WDW	50	3532M
VEWDM3559T	101	2,274	WDW	50	3532M
VEWDM3561	101	2,172	WDW	73	3632M
VEWDM3561T	101	2,197	WDW	73	3632M
VEWDM3611T	101	2,491	WDW	73	3632M
VEWDM3615T	101	2,824	WDW	89	3642M
VEWDM3651T	101	2,510	WDW	91	3646M
VEWDM3710T	101	3,777	WDW	151	3738M
VEWDM3714T	101	4,059	WDW	165	3752M
VFDEM3546	193	1,222	FD3	37	3520M
VFDEM3554	193	1,251	FD3	41	3526M
VFDFL3516TM	195	2,137	FD1	53	3535LC
VFDFL3610TM	195	2,895	FD1	98	3640LC
VFDFL3612TM	195	3,535	FD1	101	3646LC

[1] Shipping weight (lbs.) is approximate.

Index

Catalog Number	Page Number	List Price	Disc. Sym.	Ship Wgt(1)	Type Code
VFDL3501M	195	963	FD1	23	3414L
VFDL3504M	195	1,103	FD1	27	3421L
VFDL3507M	195	1,284	FD1	44	3432LC
VFDL3510M	195	1,452	FD1	40	3524L
VFDL3514M	195	1,645	FD1	48	3532LC
VFDL3516TM	195	2,137	FD1	53	3535LC
VFDL3610TM	195	2,895	FD1	98	3640LC
VFDL3612TM	195	3,535	FD1	101	3646LC
VFDM3538	193	848	FD3	24	3416M
VFDM3542	193	917	FD3	27	3420M
VFSFWDM3538-E	84	2,711	WDF	35	3516M
VFSFWDM3542-E	84	2,802	WDF	37	3522M
VFSFWDM3546-E	84	2,928	WDF	44	3522M
VFSFWDM3546T-E	84	2,953	WDF	37	3522M
VFSWDL3503	81	2,163	WDF	33	3516L
VFSWDL3504	81	2,327	WDF	41	3524L
VFSWDL3506	81	2,408	WDF	33	3516L
VFSWDL3507	81	2,557	WDF	47	3532L
VFSWDL3509	81	2,579	WDF	41	3524L
VFSWDL3510	81	2,759	WDF	63	3540L
VFSWDM3537-E	84	2,562	WDF	35	3516M
VFSWDM3538-5E	85	2,607	WDF	35	3516M
VFSWDM3538-E	84	2,607	WDF	35	3516M
VFSWDM3538-E-G	86	3,032	WDF	38	–
VFSWDM3539-E	84	2,562	WDF	37	3522M
VFSWDM3541-E	84	2,655	WDF	38	3520M
VFSWDM3542-5E	85	2,698	WDF	37	3522M
VFSWDM3542-E	84	2,698	WDF	41	3522M
VFSWDM3542-E-G	86	3,123	WDF	37	–
VFSWDM3543-E	84	3,246	WDF	45	3530M
VFSWDM3545-E	84	2,792	WDF	37	3520M
VFSWDM3546-5E	85	2,821	WDF	39	3524M
VFSWDM3546-E	84	2,821	WDF	37	3522M
VFSWDM3546-E-G	86	3,246	WDF	37	–
VFSWDM3546T-5E	85	2,849	WDF	39	3524M
VFSWDM3546T-E	84	2,849	WDF	37	3522M
VFSWDM3546T-E-G	86	3,274	WDF	37	–
VFSWDM3550-E	84	2,960	WDF	53	3532M
VFSWDM3550T-E	84	2,986	WDF	50	3532M
VFSWDM3554-E	84	3,026	WDF	45	3528M
VFSWDM3554T-5E	85	3,111	WDF	48	3528M
VFSWDM3554T-E	84	3,111	WDF	45	3528M
VFSWDM3555T-E	84	3,541	WDF	50	3532M
VFSWDM3556-E	84	3,361	WDF	45	3534M
VFSWDM3558-E	84	3,517	WDF	56	3528M
VFSWDM3558T-5E	85	3,586	WDF	56	3538M
VFSWDM3558T-E	84	3,586	WDF	63	3528M
VFSWDM3559-E	84	4,174	WDF	61	3546M
VFSWDM3559-E-G	86	4,599	WDF	61	–
VFSWDM3559T-E	84	4,191	WDF	63	3546M
VFSWDM3611T-E	84	4,294	WDF	86	3636M
VFSWDM3613T-E	85	4,556	WDF	81	3634M
VFSWDM3615T-E	85	4,592	WDF	101	3646M
VFSWDM3615T-E-G	86	5,017	WDF	101	–
VFSWDM3651-E	84	4,271	WDF	83	3636M
VFSWDM3651T-E	84	4,279	WDF	83	3636M
VFSWDM3651T-E-G	86	4,704	WDF	83	–
VFSWDM3709T-E	85	5,697	WDF	131	3734M
VFSWDM3710T-E	85	5,818	WDF	136	3740M
VFSWDM3711T-E	85	6,490	WDF	149	3744M
VFSWDM3713T-E	85	9,842	WDF	187	3756M
VFSWDM3714T-5E	85	6,891	WDF	187	3756M
VFSWDM3714T-E	85	6,891	WDF	187	3756M
VFSWDNM3554-E	84	2,922	WDF	59	3540M
VFSWDNM3554-E-G	86	3,347	WDF	59	–
VFSWDNM3554T-E	84	3,006	WDF	59	3540M
VFSWDNM3554T-E-G	86	3,431	WDF	59	–
VFSWDNM3555-E	84	3,362	WDF	63	3546M
VFSWDNM3555T-E	84	3,437	WDF	63	3546M

Catalog Number	Page Number	List Price	Disc. Sym.	Ship Wgt(1)	Type Code
VFSWDNM3558-E	84	3,412	WDF	63	3546M
VFSWDNM3558-E-G	86	3,837	WDF	59	–
VFSWDNM3558T-E	84	3,480	WDF	63	3546M
VFSWDNM3558T-E-G	86	3,905	WDF	63	–
VFSWDNM3610T-E	84	4,312	WDF	96	3646M
VFSWDNM3611T-E	84	4,160	WDF	101	3646M
VFWDM3538	101	1,116	WDW	29	3512M
VFWDM3542	101	1,207	WDW	31	3514M
VHECP2333T	156	7,352	PV3	316	0944M
VHECP2334T	156	7,680	PV3	337	0960M
VHECP2394T	156	7,644	PV3	296	0930M
VHECP3660T	156	3,942	PV3	120	0624M
VHECP3661T	156	3,530	PV3	129	0632M
VHECP3663T	156	4,787	PV3	99	0632M
VHECP3665T	156	4,433	PV3	141	0642M
VHECP3769T	156	5,745	PV3	173	0726M
VHECP3770T	156	5,340	PV3	170	0738M
VHECP3771T	156	5,974	PV3	203	0742M
VHECP3774T	156	5,760	PV3	231	0748M
VHECP4103T	156	9,426	PV3	518	1054M
VHECP4104T	156	10,614	PV3	563	1056M
VHECP4106T	156	8,444	PV3	325	0944M
VHECP4107T	156	9,827	PV3	337	0950M
VHECP4108T	156	11,304	PV3	361	0950M
VHECP4109T	156	15,006	PV3	600	1240M
VHECP4110T	156	13,565	PV3	650	1254M
VHECP4114T	156	15,548	PV3	668	1252M
VHECP4115T	156	15,278	PV3	764	1272M
VHECP4310T	156	21,123	PV3	959	A36056M
VHECP4313T	156	23,149	PV3	1042	A36068M
VHECP4314T	156	19,449	PV3	969	A36062M
VHECP4316T	156	22,060	PV3	1008	A36070M
VJPFPM2513T	136	3,419	PF3	220	3936M
VJPFPM2514T	136	3,663	PF3	145	3742M
VJPFPM2514T-2/4	136	3,663	PF3	145	3742M
VJPFPM2514T-5	137	3,663	PF3	145	3742M
VJPFPM2515T	136	3,828	PF3	231	3936M
VJPFPM2515T-5	137	3,828	PF3	208	3936M
VJPFPM2516T	136	4,208	PF3	221	3934M
VJPFPM2516T-2/4	136	4,208	PF3	221	3934M
VJPFPM2516T-5	137	4,208	PF3	219	3934M
VJPFPM2531T	136	4,694	PF3	272	3956M
VJPFPM2531T-5	137	4,694	PF3	322	3956M
VJPFPM2534T	136	4,983	PF3	235	3936M
VJPFPM2534T-2/4	136	4,983	PF3	235	3936M
VJPFPM2534T-5	137	4,983	PF3	266	3936M
VJPFPM2535T	136	5,761	PF3	375	4052M
VJPFPM2535T-5	137	5,761	PF3	396	4052M
VJPFPM2538T	136	5,956	PF3	263	3954M
VJPFPM2538T-2/4	136	5,956	PF3	263	3954M
VJPFPM2538T-5	137	5,956	PF3	303	3954M
VJPFPM2539T	136	6,928	PF3	375	4052M
VJPFPM2539T-5	137	6,928	PF3	530	4052M
VJPFPM2542T	136	7,422	PF3	331	4044M
VJPFPM2542T-2/4	136	7,422	PF3	331	4044M
VJPFPM2542T-5	137	7,422	PF3	396	4044M
VJPFPM2543T	136	7,712	PF3	378	4064M
VJPFPM2543T-5	137	7,712	PF3	396	4064M
VJPFPM2546T	136	8,785	PF3	385	4062M
VJPFPM2546T-2/4	136	8,785	PF3	385	4062M
VJPFPM2546T-5	137	8,785	PF3	380	4062M
VJPFPM2547T	136	9,554	PF3	480	4252M
VJPFPM2547T-5	137	9,554	PF3	475	4252M
VJPFPM2549T	136	11,848	PF3	472	4250M
VJPFPM2549T-2/4	136	11,848	PF3	472	4250M
VJPFPM2549T-5	137	11,848	PF3	648	4250M
VJPFPM2550T	136	12,641	PF3	523	4260M
VJPFPM2550T-2/4	136	12,641	PF3	523	4260M
VJPFPM2550T-5	137	12,641	PF3	523	4260M

(1) Shipping weight (lbs.) is approximate.

Index

Catalog Number	Page Number	List Price	Disc. Sym.	Ship Wgt(1)	Type Code
VJPFPM2551T	136	11,154	PF3	565	4272M
VJPFPM2551T-5	137	11,154	PF3	565	4272M
VJPFPM3312T	136	2,142	PF3	121	3728M
VJPFPM3312T-2/4	136	2,142	PF3	121	3728M
VJPFPM3313T	136	2,390	PF3	130	3738M
VJPFPM3314T	136	2,752	PF3	131	3734M
VJPFPM3314T-2/4	136	2,752	PF3	131	3734M
VL1321T	22	1,311	GO1	48	3535L
VL1322T	22	1,335	GO1	49	3532LC
VL1406T	22	1,622	GO1	61	3532LC
VL1408T	22	1,642	GO1	78	3634LC
VL3501	19	659	GE1	22	3414L
VL3501-50	239	813	5E1	17	3418L
VL3503	19	667	5E1	23	3413L
VL3503-50	239	738	5E1	25	3420L
VL3504	19	771	GE1	27	3421L
VL3504-50	239	942	5E1	31	3428L
VL3505	19	1,426	GE1	43	3528L
VL3506	19	741	GE1	29	3424L
VL3506-50	239	850	5E1	35	3520L
VL3506A	19	818	GE1	28	3424L
VL3507	19	883	GE1	33	3428LC
VL3507-50	239	1,116	5E1	39	3524L
VL3508	19	1,640	GE1	44	3528LC
VL3509	19	853	GE1	36	3520L
VL3509-50	239	1,000	5E1	40	3524L
VL3509A	19	932	GE1	41	3524L
VL3510	19	1,011	GE1	40	3524L
VL3510-50	239	1,278	5E1	47	3532L
VL3510T	19	1,011	GE1	44	3524L
VL3513	19	1,108	GE1	40	3524L
VL3513-50	239	1,286	5E1	48	3532L
VL3513T	19	1,177	GE1	41	3524L
VL3514	19	1,146	GE1	48	3532LC
VL3514-50	239	1,444	5E1	51	3535LC
VL3514T	19	1,159	GE1	50	3532LC
VL3515	19	1,419	GE1	50	3535L
VL3515-50	239	1,632	5E1	52	3535LC
VL3515T	19	1,446	GE1	51	3535L
VL3605	210	2,557	DPL	64	3628L
VL3605T	19	2,048	GE1	66	3628L
VL3606T	19	2,286	GE1	73	3634L
VL3609T	19	2,419	GE1	79	3634LC
VLECP2333T	156	9,004	PV3	268	0944M
VLECP2334T	157	9,332	PV3	303	0960M
VLECP2394T	156	9,295	PV3	225	0934M
VLECP3660T	156	5,027	PV3	99	0628M
VLECP3661T	156	5,139	PV3	105	0632M
VLECP3663T	156	5,534	PV3	105	0632M
VLECP3665T	156	5,180	PV3	119	0642M
VLECP3769T	156	6,575	PV3	169	0732M
VLECP3770T	156	6,005	PV3	170	0738M
VLECP3771T	156	6,804	PV3	182	0742M
VLECP3774T	156	6,590	PV3	231	0748M
VLECP4103T	157	11,864	PV3	420	1054M
VLECP4104T	157	13,053	PV3	460	1056M
VLECP4106T	157	10,096	PV3	265	0944M
VLECP4107T	157	12,266	PV3	396	1048M
VLECP4108T	157	13,743	PV3	446	1048M
VLECP4109T	157	18,199	PV3	528	1240M
VLECP4110T	157	16,758	PV3	600	1254M
VLECP82333T-4	155	9,424	PV3	268	0944M
VLECP82334T-4	155	9,827	PV3	420	1046M
VLECP82394T-4	155	9,834	PV3	239	0934M
VLECP83660T-4	155	5,147	PV3	95	0624M
VLECP83661T-4	155	5,273	PV3	108	0636M
VLECP83663T-4	155	5,888	PV3	123	0642M
VLECP83665T-4	155	5,502	PV3	115	0642M

Catalog Number	Page Number	List Price	Disc. Sym.	Ship Wgt(1)	Type Code
VLECP83769T-4	155	7,163	PV3	171	0732M
VLECP83770T-4	155	6,541	PV3	178	0740M
VLECP83771T-4	155	7,140	PV3	189	0742M
VLECP83774T-4	155	7,413	PV3	231	0748M
VLECP84103T-4	155	14,099	PV3	437	1056M
VLECP84104T-4	155	15,335	PV3	460	1060M
VLECP84106T-4	155	10,621	PV3	310	0954M
VLECP84107T-4	155	14,670	PV3	396	1048M
VLECP84108T-4	155	16,160	PV3	400	1048M
VLECP84109T-4	155	22,991	PV3	607	1256M
VLECP84110T-4	155	21,560	PV3	741	1260M
VM3153T	40	998	GO3	32	3428M
VM3531	31	828	GE3	20	3411M
VM3534	31	586	GE3	21	3413M
VM3534-5	32	586	GE3	21	3413M
VM3534-57	239	672	5E3	21	3413M
VM3535	31	930	GE3	22	3414M
VM3537	31	636	GE3	20	3410M
VM3537-5	32	636	GE3	19	3410M
VM3537-57	239	729	5E3	22	3413M
VM3538	31	598	GE3	23	3416M
VM3538-5	32	672	GE3	22	3416M
VM3538-57	239	785	5E3	25	3420M
VM3539	31	998	GE3	24	3418M
VM3541	31	695	GE3	21	3413M
VM3541-5	32	695	GE3	21	3413M
VM3541-57	239	761	5E3	26	3420M
VM3542	31	636	GE3	26	3420M
VM3542-5	32	715	GE3	26	3420M
VM3542-57	239	843	5E3	32	3428M
VM3543	31	1,021	GE3	32	3428M
VM3543T	31	1,021	GE3	33	3428M
VNDM3538	65	1,015	SDD	35	3512M
VNDM3542	65	1,056	SDD	37	3514M
VNEDM3546	65	1,578	SDD	41	3524M
VNEDM3546T	65	1,594	SDD	41	3524M
VNEDM3554	65	1,707	SDD	48	3534M
VNEDM3554T	65	1,723	SDD	49	3534M
VNM3537	31	894	GE3	32	3516M
VNM3538	31	731	GE3	22	3416M
VNM3541	31	955	GE3	36	3520M
VNM3542	31	741	GE3	31	3428M
VP3311D	270	1,179	PMS	23	3428M
VP3316D	270	1,243	PMS	27	3428M
VP3326D	270	1,391	PMS	31	3428M
VP3411-14	270	1,326	PMS	30	3428M
VP3416-14	270	1,411	PMS	31	3428M
VP3426-14	270	1,442	PMS	37	3428M
VP3428-14	270	1,442	PMS	31	3428M
VP3428D	270	1,442	PMS	33	3428M
VP3436-14	270	1,689	PMS	40	3428M
VP3436D	270	1,689	PMS	40	3428M
VP3439-14	270	1,495	PMS	35	3428M
VP3439D	270	1,495	PMS	37	3428M
VP3455-14	270	2,055	PMS	45	3428M
VP3455D	270	2,055	PMS	46	3428M
VP3458-14	270	1,689	PMS	38	3428M
VP3458D	270	1,689	PMS	41	3428M
VP3468-14	270	1,834	PMS	43	3428M
VP3468D	270	1,884	PMS	47	3428M
VP3575-14	270	3,807	PMS	73	3428M
VP3575D	270	3,807	PMS	71	3428M
VP3585-14	270	4,542	PMS	80	3428M
VP3585D	270	4,542	PMS	78	3428M
VP3588-14	270	3,807	PMS	70	3428M
VP3588D	270	3,807	PMS	69	3428M
VP3603D	270	5,587	PMS	121	3428M
VP3605D	270	9,208	PMS	166	3428M

(1) Shipping weight (lbs.) is approximate.

Index

Catalog Number	Page Number	List Price	Disc. Sym.	Ship Wgt(1)	Type Code
VPECP4114T	157	18,851	PV3	587	1252M
VPECP4115T	157	18,581	PV3	700	1272M
VPECP4310T	157	25,548	PV3	999	A36056M
VPECP4313T	157	27,573	PV3	1005	A36068M
VPECP4314T	157	23,873	PV3	910	A3658M
VPECP4316T	157	26,485	PV3	965	A36070M
VPECP84114T-4	155	19,977	PV3	635	1266M
VPECP84115T-4	155	19,655	PV3	700	1272M
VPECP84310T-4	155	30,888	PV3	999	A36056M
VPECP84313T-4	155	32,051	PV3	1005	A36068M
VPECP84314T-4	155	30,071	PV3	910	A36062M
VPECP84316T-4	155	30,519	PV3	965	A36070M
VRBM3538	213	2,552	UH3	35	3420M
VRBM3542	213	2,989	UH3	47	3428M
VRBM3546	213	3,443	UH3	47	3436M
VRBM3546T	213	3,682	UH3	46	3436M
VRBM3554T	213	3,746	UH3	63	7530M
VRBM3558T	213	3,850	UH3	69	7536M
VRBM3561T	213	3,964	UH3	76	7542M
VSSFWDM3538	93	2,277	WDS	40	3512M
VSSFWDM3542	93	2,351	WDS	44	3518M
VSSWDM3457	93	1,685	WDS	33	3512M
VSSWDM3534	93	1,775	WDS	35	3512M
VSSWDM3537	93	2,001	WDS	37	3512M
VSSWDM3538	93	2,154	WDS	40	3516M
VSSWDM3541	93	2,078	WDS	41	3518M
VSSWDM3542	93	2,233	WDS	42	3518M
VSWDM3538	94	1,164	WDP	28	3512M
VSWDM3538-5	95	1,164	WDP	33	3512M
VSWDM3542	94	1,347	WDP	31	3514M
VSWDM3542-5	95	1,347	WDP	37	3514M
VUHL3518	212	764	UH1	35	3520L
VUHL3519	212	940	UH1	40	3524L
VUHM3538	212	682	UH3	30	3512M
VUHM3538-5	212	682	UH3	33	3514M
VUHM3542	212	723	UH3	35	3514M
VUHM3542-5	212	723	UH3	34	3516M
VWDL3504	97	1,028	WDW	35	3520L
VWDL3507	97	1,207	WDW	36	3520L
VWDL3510	97	1,382	WDW	42	3524L
VWDL3514	97	1,658	WDW	48	3532LC
VWDM3534	101	855	WDW	33	3512M
VWDM3538	101	1,069	WDW	29	3512M
VWDM3538-5	102	1,069	WDW	28	3512M
VWDM3542	101	1,161	WDW	33	3516M
VWDM3542-5	102	1,161	WDW	32	3516M
VXL050242A	113	1,205	XP1	29	3414L
VXL050322A	113	917	XP1	30	3416L
VXL050342A	113	1,232	XP1	29	3414L
VXL050362A	113	1,650	XP1	42	3528L
VXL050522A	113	1,187	XP1	42	3420L
VXL050542A	113	1,360	XP1	36	3424L
VXL050562A	113	1,892	XP1	50	3528L
VXL050722A	113	1,270	XP1	40	3524L
VXL050742A	113	1,515	XP1	48	3528L
VXL05122A	113	1,360	XP1	50	3524L
VXL05142A	113	1,721	XP1	48	3528L
VXL051522	113	1,958	XP1	42	3530L
VXL051542A	113	2,271	XP1	73	3546L
VXL18242	113	3,613	XP1	93	3634L
VXM050242A	116	1,039	XPM	25	3410M
VXM050342A	116	1,230	XPM	28	3413M
VXM050522A	116	1,396	XPM	27	3410M
VXM050542-5	117	1,276	XPM	37	3512M
VXM050542A	116	1,276	XPM	30	3416M
VXM050562A	116	1,816	XPM	40	3516M
VXM050722A	117	1,451	XPM	29	3413M
VXM050742-5	117	1,456	XPM	37	3516M
VXM050742A	117	1,456	XPM	35	3420M
VXM050762A	117	1,923	XPM	47	3524M
VXM05122	117	2,294	XPM	41	3516M
VXM05142	117	2,462	XPM	50	3520M
VXM05142-5	117	2,462	XPM	50	3520M
VXM051542	117	2,498	XPM	50	3526M
VXM05162	117	3,063	XPM	49	3526M
VXM05242	117	2,561	XPM	64	3540M
VXM14142T	117	2,475	XPM	50	3520M
VXM14142T-5	117	2,475	XPM	50	3520M
VXM141522T	117	2,434	XPM	47	3520M
VXM141542T	117	2,511	XPM	50	3526M
VXM141542T-5	117	2,511	XPM	50	3526M
VXM141562T	117	4,087	XPM	102	3632M
VXM14222T	117	2,826	XPM	55	3526M
VXM14242T	117	2,574	XPM	64	3540M
VXM14242T-5	117	2,574	XPM	64	3540M
VXM18322T	117	3,804	XPM	80	3622M
VXM18342T	117	3,148	XPM	102	3632M
VXM18342T-5	117	3,148	XPM	102	3632M
VXM18522T	117	4,370	XPM	91	3634M
VXM18542T	117	3,641	XPM	118	3646M
VXM18542T-5	117	3,641	XPM	118	3642M
VXM21142T	117	6,009	XPM	189	3752M
VXM21722T	117	5,004	XPM	149	3728M
VXM21742T	117	4,520	XPM	163	3738M
VXM21742T-5	117	4,520	XPM	163	3738M
VXT3012T	49	1,223	XTM	53	0516M
VXT3012T-5	49	1,223	XTM	53	0516M
VXT3014T	49	1,201	XTM	58	0524M
VXT3014T-5	49	1,201	XTM	58	0524M
VXT30152T	49	1,296	XTM	58	0524M
VXT30152T-5	49	1,296	XTM	58	0524M
VXT30154T	49	1,362	XTM	63	0530M
VXT30154T-5	49	1,362	XTM	63	0530M
VXT30156T	49	1,565	XTM	99	0630M
VXT30156T-5	49	1,565	XTM	99	0630M
VXT3016T	49	1,338	XTM	56	0526M
VXT3016T-5	49	1,338	XTM	56	0526M
VXT3022T	49	1,358	XTM	64	0532M
VXT3022T-5	49	1,358	XTM	64	0532M
VXT3024T	49	1,388	XTM	65	0534M
VXT3024T-5	49	1,388	XTM	65	0534M
VXT3026T	49	1,743	XTM	115	0640M
VXT3026T-5	49	1,743	XTM	115	0640M
VXT3032T	49	1,576	XTM	99	0628M
VXT3032T-140	49	1,530	XTM	64	0532M
VXT3032T-5	49	1,576	XTM	99	0628M
VXT3034T	49	1,526	XTM	105	0632M
VXT3034T-5	49	1,526	XTM	105	0632M
VXT3036T	49	2,082	XTM	194	0738M
VXT3036T-5	49	2,082	XTM	211	0736M
VXT3052T	49	1,782	XTM	115	0632M
VXT3052T-5	49	1,782	XTM	105	0632M
VXT3054T	49	1,677	XTM	115	0642M
VXT3054T-5	49	1,677	XTM	115	0642M
VXT3056T	49	2,624	XTM	203	0744M
VXT3056T-5	49	2,624	XTM	226	0748M
VXT3072T	49	2,410	XTM	171	0732M
VXT3072T-180	49	2,103	XTM	123	0642M
VXT3072T-5	50	2,410	XTM	170	0726M
VXT3074T	49	2,348	XTM	203	0738M
VXT3074T-5	50	2,348	XTM	231	0748M
VXT3076T	49	3,948	XTM	302	0954M
VXT3076T-5	50	3,948	XTM	302	0954M
VXT3102T	49	2,786	XTM	198	0738M
VXT3102T-5	50	2,787	XTM	198	0738M
VXT3104T	49	2,769	XTM	231	0748M
VXT3104T-5	50	2,769	XTM	196	0750M
VXT3106T	49	4,762	XTM	322	0960M

(1) Shipping weight (lbs.) is approximate.

Index

Catalog Number	Page Number	List Price	Disc. Sym.	Ship Wgt(1)	Type Code
VXT3106T-5	50	4,762	XTM	322	0960M
VXT3152T	49	3,974	XTM	240	0930M
VXT3152T-210	49	3,415	XTM	225	0750M
VXT3152T-5	50	3,974	XTM	239	0934M
VXT3154T	49	3,979	XTM	268	0944M
VXT3154T-5	50	3,979	XTM	286	0948M
VXT3156T	49	6,766	XTM	437	1046M
VXT3156T-5	50	6,766	XTM	391	1046M
VXT3202T	49	4,874	XTM	240	0936M
VXT3202T-5	50	4,874	XTM	229	0936M
VXT3204T	49	4,736	XTM	322	0960M
VXT3204T-5	50	4,736	XTM	322	0960M
VXT3206T	49	8,086	XTM	437	1054M
VXT3206T-5	50	8,086	XTM	455	1062M
VXT3252T-250	49	5,503	XTM	300	0950M
VXT3252TS	49	6,213	XTM	396	1048M
VXT3252TS-5	50	6,213	XTM	396	1048M
VXT3254T	49	5,880	XTM	437	1056M
VXT3254T-5	50	5,880	XTM	437	1056M
VXT3256T	49	9,281	XTM	605	1260M
VXT3256T-5	50	9,281	XTM	605	1260M
VXT3302TS	49	7,154	XTM	396	1048M
VXT3302TS-5	50	7,154	XTM	396	1048M
VXT3304T	49	6,933	XTM	460	1060M
VXT3304T-5	50	6,933	XTM	460	1060M
W70	321	75	SVC	1	–
W82	321	85	SVC	1	–
WCL1406T	144	1,760	PC1	81	3628L
WCL1408T	144	2,019	PC1	91	3634LC
WCL1409T	144	2,491	PC1	91	3634L
WCL1508T	144	2,868	PC1	116	3727L
WCL1509T	144	3,563	PC1	117	3729L
WCL1511T	144	4,395	PC1	143	3740L
WD5600A01SP	110	43	SVC	1	–
WD5603A01SP	110	18	SVC	1	–
WD5603A05SP	110	73	SVC	3	–
WDL3504	97	1,024	WDW	34	3520L
WDL3507	97	1,199	WDW	37	3520L
WDL3510	97	1,386	WDW	41	3524L
WDL3514T	97	1,708	WDW	50	3532LC
WDM3538	98	1,023	WDW	27	3512M
WDM3542	98	1,093	WDW	30	3514M
WDM3558TP	103	1,951	WDW	39	3528M
WDM3561TP	103	2,396	WDW	59	3540M
WDNMM3546-4	104	1,523	WDW	39	3436M
XEFRPM21104	63	9,816	RP5	170	–
XEFRPM25154	63	10,634	RP5	195	–
XEFRPM25204	63	11,452	RP5	210	–
XEFRPM28254	63	12,271	RP5	290	–
XEFRPM28304	63	13,089	RP5	315	–
XEFRPM32404	63	14,096	RP5	435	–
XEFRPM32504	63	15,046	RP5	500	–
XEFRPM36604	63	20,168	RP5	690	–
XEFRPM36754	63	23,559	RP5	775	–
XEFRPM401004	63	30,931	RP5	955	–
XL040242A	112	911	XP1	27	3411L
XL040322A	112	807	XP1	28	3413L
XL040342A	112	1,174	XP1	29	3414L
XL040542A	112	1,291	XP1	36	3424L
XL050242A	112	869	XP1	29	3414L
XL050245A	112	1,082	XP1	29	3414L
XL050342A	112	1,118	XP1	29	3414L
XL050362A	112	1,582	XP1	50	3528L
XL050522A	112	1,060	XP1	50	3420L
XL050542A	112	1,232	XP1	36	3424L
XL050545A	112	1,444	XP1	36	3424L
XL050562A	112	1,823	XP1	50	3528L
XL050722A	112	1,195	XP1	50	3524L

Catalog Number	Page Number	List Price	Disc. Sym.	Ship Wgt(1)	Type Code
XL050742A	112	1,447	XP1	53	3528L
XL050745A	112	1,660	XP1	53	3528L
XL050762	112	2,108	XP1	63	3540L
XL05122A	112	1,291	XP1	50	3524L
XL05142A	112	1,648	XP1	53	3528L
XL14142T	112	1,614	XP1	48	3524L
XL141522T	112	1,871	XP1	42	3530L
XL14222T	112	2,312	XP1	67	3540L
XL181542	112	3,353	XP1	93	3634L
XL18162	112	3,611	XP1	82	3634L
XL18242T	112	3,397	XP1	93	3634L
XL18322T	112	3,530	XP1	91	3634L
XL21342	112	5,363	XP1	161	3740L
XL21542	112	6,822	XP1	111	3726LC
XM040242A	114	947	XPM	25	3410M
XM040542A	114	1,184	XPM	30	3416M
XM050342A	114	1,138	XPM	28	3413M
XM050362A	114	1,633	XPM	36	3512M
XM050522A	114	1,304	XPM	27	3410M
XM050542-5	115	1,184	XPM	37	3512M
XM050542A	114	1,184	XPM	30	3416M
XM050562A	114	1,724	XPM	40	3516M
XM050722A	114	1,359	XPM	29	3413M
XM050742-5	115	1,363	XPM	45	3516M
XM050742A	114	1,363	XPM	35	3420M
XM050762A	114	1,831	XPM	47	3524M
XM05122	114	2,202	XPM	41	3516M
XM05122-5	115	2,202	XPM	41	3516M
XM05142	114	2,370	XPM	50	3520M
XM05142-5	115	2,370	XPM	50	3520M
XM051542	114	2,406	XPM	46	3526M
XM05162	114	2,971	XPM	49	3526M
XM05242	114	2,468	XPM	53	3540M
XM140762TA	114	1,831	XPM	47	3524M
XM14142T	114	2,370	XPM	50	3520M
XM14142T-5	115	2,370	XPM	50	3520M
XM141522T	114	2,328	XPM	47	3520M
XM141522T-5	115	2,328	XPM	47	3520M
XM141542T	114	2,406	XPM	46	3526M
XM141542T-5	115	2,406	XPM	46	3526M
XM14162T	114	2,971	XPM	46	3526M
XM14222T	114	2,720	XPM	46	3526M
XM14222T-5	115	2,720	XPM	55	3526M
XM14242T	114	2,468	XPM	59	3540M
XM14242T-5	115	2,468	XPM	48	3540M
XM18142	114	2,501	XPM	50	3520M
XM181562T	114	3,568	XPM	102	3632M
XM18262T	114	3,870	XPM	100	3644M
XM18322T	114	3,285	XPM	80	3622M
XM18342T	114	2,630	XPM	102	3632M
XM18342T-5	115	2,630	XPM	102	3632M
XM18522T	114	3,852	XPM	91	3634M
XM18522T-5	115	3,852	XPM	93	3630M
XM18542T	114	3,122	XPM	118	3646M
XM18542T-5	115	3,122	XPM	97	3642M
XM18542T-CI	114	3,481	XPM	151	0640M
XM21122T	114	5,592	XPM	122	3750M
XM21142T	114	5,447	XPM	189	3752M
XM21362T	114	4,374	XPM	139	3738M
XM21562T	114	4,854	XPM	184	3752M
XM21722T	114	4,854	XPM	125	3728M
XM21742T	114	4,443	XPM	161	3744M
XM21742T-5	115	3,959	XPM	161	3736M
XM251522T	115	5,271	XPM	349	0934M
XM251542T	115	6,177	XPM	373	0944M
XM25162T	114	6,723	XPM	400	0956M
XM25222T	115	6,760	XPM	390	0950M
XM25242T	115	8,003	XPM	396	0960M

(1) Shipping weight (lbs.) is approximate.

Index

Catalog Number	Page Number	List Price	Disc. Sym.	Ship Wgt(1)	Type Code
XM25762T	114	5,592	XPM	374	0954M
XM281562T	115	10,837	XPM	478	1046M
XM282522T	115	8,996	XPM	507	1048M
XM282542T	115	9,709	XPM	537	1054M
XM28262T	115	11,127	XPM	466	1062M
XM28322T	115	10,573	XPM	525	1048M
XM28342T	115	11,836	XPM	554	1056M
XM322562T	115	13,913	XPM	741	1260M
XM32362T	115	15,349	XPM	766	1264M
XM32422T	115	14,104	XPM	745	1252M
XM32442T	115	15,862	XPM	713	1254M
XM32522T	115	18,059	XPM	766	1264M
XM32542T	115	18,413	XPM	790	1272M
XM36462T	115	17,789	XPM	915	A36062M
XM36562T	115	20,078	XPM	918	A36062M
XM36642T	115	20,597	XPM	972	A3658M
XT3012T	44	1,173	XTM	53	0516M
XT3012T-5	45	1,173	XTM	53	0516M
XT3014T	44	1,151	XTM	58	0524M
XT3014T-5	45	1,151	XTM	58	0524M
XT30152T	44	1,243	XTM	58	0524M
XT30152T-5	45	1,243	XTM	58	0524M
XT30154T	44	1,296	XTM	63	0530M
XT30154T-5	45	1,296	XTM	63	0530M
XT30156T	44	1,500	XTM	99	0630M
XT30156T-5	45	1,500	XTM	99	0630M
XT3016T	44	1,288	XTM	56	0526M
XT3016T-5	45	1,288	XTM	56	0526M
XT3022T	44	1,305	XTM	64	0532M
XT3022T-5	45	1,305	XTM	64	0532M
XT3024T	44	1,335	XTM	65	0534M
XT3024T-5	45	1,335	XTM	65	0534M
XT3026T	44	1,664	XTM	113	0642M
XT3026T-5	45	1,664	XTM	115	0640M
XT3032T	44	1,497	XTM	99	0628M
XT3032T-140	44	1,477	XTM	64	0532M
XT3032T-5	45	1,497	XTM	99	0628M
XT3034T	44	1,447	XTM	105	0632M
XT3034T-5	45	1,447	XTM	105	0632M
XT3036T	44	1,971	XTM	194	0738M
XT3036T-5	45	1,971	XTM	211	0736M
XT3052T	44	1,704	XTM	115	0632M
XT3052T-5	45	1,704	XTM	105	0632M
XT3054T	44	1,598	XTM	115	0642M
XT3054T-5	45	1,598	XTM	115	0642M
XT3056T	44	2,513	XTM	203	0746M
XT3056T-5	45	2,513	XTM	226	0748M
XT3072T	44	2,298	XTM	171	0732M
XT3072T-180	44	2,025	XTM	123	0642M
XT3072T-5	45	2,298	XTM	170	0726M
XT3074T	44	2,236	XTM	203	0738M
XT3074T-5	45	2,236	XTM	231	0748M
XT3076T	44	3,803	XTM	302	0954M
XT3076T-5	45	3,803	XTM	302	0954M
XT31002TS	45	25,325	XTM	1327	A40060M
XT31002TS-5	46	25,325	XTM	1327	A40060M
XT31004T	45	24,665	XTM	1375	A40072M
XT31004T-5	46	24,665	XTM	1375	A40072M
XT31006T-4	45	33,682	XTM	1800	A44062M
XT31006T-5	46	33,681	XTM	2029	A44084M
XT3102T	44	2,674	XTM	198	0738M
XT3102T-5	45	2,674	XTM	198	0738M
XT3104T	44	2,657	XTM	231	0748M
XT3104T-5	45	2,657	XTM	196	0750M
XT3106T	44	4,617	XTM	323	0960M
XT3106T-5	45	4,617	XTM	322	0960M
XT31252TS	45	32,401	XTM	1539	A4468M
XT31252TS-5	46	32,401	XTM	1539	A4468M
XT31254T-4	45	31,111	XTM	1669	A44076M
XT31254T-5	46	31,111	XTM	1669	A44076M
XT31256T-4	45	38,671	XTM	1913	A44076M
XT31256T-5	46	38,671	XTM	1913	A44076M
XT31502TS-4	45	39,811	XTM	2017	A4478M
XT31502TS-5	46	39,810	XTM	2017	A4478M
XT31504T-4	45	36,729	XTM	1826	A4488M
XT31504T-5	46	36,728	XTM	1826	A4488M
XT31506T-4	45	44,473	XTM	4000	A44112M
XT31506T-5	46	44,472	XTM	2000	A44120M
XT3152T	44	3,829	XTM	239	0930M
XT3152T-210	44	3,303	XTM	225	0750M
XT3152T-5	45	3,829	XTM	239	0934M
XT3154T	44	3,835	XTM	269	0944M
XT3154T-5	45	3,835	XTM	286	0948M
XT3156T	44	6,542	XTM	437	1046M
XT3156T-5	45	6,542	XTM	391	1046M
XT32002TS-4	45	46,272	XTM	2330	A44104M
XT32002TS-5	46	46,272	XTM	2330	A44104M
XT32004T-4	45	44,483	XTM	2676	A44120M
XT32004T-5	46	44,483	XTM	2676	A44120M
XT32006T-4	45	54,419	XTM	2789	A44140M
XT32006T-5	46	54,419	XTM	2789	A44140M
XT3202T	44	4,729	XTM	229	0936M
XT3202T-5	46	4,729	XTM	229	0936M
XT3204T	44	4,591	XTM	322	0960M
XT3204T-5	46	4,591	XTM	322	0960M
XT3206T	44	7,863	XTM	437	1054M
XT3206T-5	46	7,863	XTM	455	1062M
XT32502TS-4	45	69,764	XTM	2595	A44112M
XT32502TS-5	46	69,764	XTM	2855	A44144M
XT32504T-4	45	56,369	XTM	2888	A44144M
XT32504T-5	46	56,369	XTM	3027	A44160M
XT32506T-4	45	74,775	XTM	3125	A44160M
XT32506T-5	46	74,775	XTM	3125	A44160M
XT3252T-250	44	5,358	XTM	299	0950M
XT3252TS	44	5,989	XTM	396	1048M
XT3252TS-5	46	5,989	XTM	396	1048M
XT3254T	44	5,657	XTM	437	1056M
XT3254T-5	46	5,657	XTM	437	1056M
XT3256T	44	8,985	XTM	605	1260M
XT3256T-5	46	8,985	XTM	605	1260M
XT33002TS-4	45	80,766	XTM	2595	A44128M
XT33002TS-5	46	80,766	XTM	3149	A44160M
XT33004T-4	45	66,235	XTM	3130	A44152M
XT33004T-5	46	66,234	XTM	3027	A44160M
XT3302TS	45	6,930	XTM	444	1048M
XT3302TS-5	46	6,930	XTM	396	1048M
XT3304T	45	6,709	XTM	460	1056M
XT3304T-5	46	6,709	XTM	460	1060M
XT3306T	45	10,307	XTM	630	1264M
XT3306T-5	46	10,307	XTM	640	1264M
XT3402TS	45	9,015	XTM	587	1240M
XT3402TS-5	46	9,015	XTM	528	1240M
XT3404T	45	8,682	XTM	600	1254M
XT3404T-5	46	8,682	XTM	600	1260M
XT3406T	45	13,790	XTM	908	A36062M
XT3406T-5	46	13,790	XTM	908	A36062M
XT3502TS	45	11,165	XTM	635	1252M
XT3502TS-5	46	11,165	XTM	575	1252M
XT3504T	45	10,787	XTM	700	1272M
XT3504T-5	46	10,787	XTM	700	1272M
XT3506T	45	16,259	XTM	908	A36062M
XT3506T-5	46	16,259	XTM	996	A3668M
XT3602TS	45	16,190	XTM	999	A36056M
XT3602TS-5	46	16,190	XTM	999	A36056M
XT3604T	45	14,997	XTM	947	A3658M
XT3604T-5	46	14,997	XTM	952	A3658M
XT3606T	45	19,431	XTM	1322	A40064M
XT3606T-5	46	19,431	XTM	1322	A40064M

(1) Shipping weight (lbs.) is approximate.

Index

Catalog Number	Page Number	List Price	Disc. Sym.	Ship Wgt(1)	Type Code
XT3752TS	45	18,909	XTM	1005	A36068M
XT3752TS-5	46	18,909	XTM	1005	A36068M
XT3754T	45	17,759	XTM	965	A36070M
XT3754T-5	46	17,759	XTM	965	A36070M
XT3756T	45	22,809	XTM	1322	A40064M
XT3756T-5	46	22,809	XTM	1322	A40064M
YPC144A	191	489	HV1	18	3408C
YPC164A	191	555	HV1	22	3411C
YPC244A	191	529	HV1	21	3411C
YPC245A	191	537	HV1	21	3411C
YPC264A	191	608	HV1	22	3414C
YPC344A	191	608	HV1	22	3414C
YPC345A	191	616	HV1	24	3414C
YPC364A	191	695	HV1	27	3420C
ZDBRPM18154C	251	11,449	RP2	180	–
ZDBRPM18204C	251	12,225	RP2	209	–
ZDBRPM21304C	251	12,366	RP2	290	–
ZDBRPM21404	251	13,010	RP2	355	–
ZDBRPM25504	251	14,140	RP2	475	–
ZDBRPM25604	251	19,352	RP2	540	–
ZDBRPM25754	251	22,493	RP2	605	–
ZDBRPM281004R1	251	25,036	RP2	805	–
ZDBRPM281254	251	26,308	RP2	890	–
ZDFRPM18104C	251	11,611	RP3	179	–
ZDFRPM21204C	251	12,291	RP3	290	–
ZDFRPM21254C	251	12,995	RP3	355	–
ZDFRPM25304C	251	13,642	RP3	475	–
ZDFRPM25404	251	14,087	RP3	605	–
ZDM2276T	259	10,691	VS2	333	0954M
ZDM2332T	259	12,531	VS2	356	0960M
ZDM2333T	260	8,091	VS2	317	0944M
ZDM2333T-5	260	8,091	VS2	289	0944M
ZDM2334T	260	8,482	VS2	342	0960M
ZDM2334T-5	260	8,482	VS2	340	0960M
ZDM3581T	259	5,042	VS2	66	0524M
ZDM3581T-5	259	5,042	VS2	65	0518M
ZDM3582T	259	5,506	VS2	62	0526M
ZDM3584T	259	5,197	VS2	70	0530M
ZDM3584T-5	259	5,197	VS2	62	0528M
ZDM3587T	259	5,389	VS2	75	0534M
ZDM3587T-5	259	5,389	VS2	74	0534M
ZDM3661T	259	6,227	VS2	112	0632M
ZDM3661T-5	259	6,227	VS2	110	0628M
ZDM3664T	259	5,994	VS2	113	0642M
ZDM3665T	259	6,448	VS2	125	0640M
ZDM3665T-5	259	6,448	VS2	125	0640M
ZDM3667T	259	5,896	VS2	99	0630M
ZDM3764T	259	7,102	VS2	187	0738M
ZDM3768T	259	8,163	VS2	226	0748M
ZDM3770T	259	7,283	VS2	170	0738M
ZDM3770T-5	259	7,283	VS2	170	0738M
ZDM3774T	259	7,632	VS2	231	0748M
ZDM3774T-5	259	7,632	VS2	231	0748M
ZDM4100T	260	14,414	VS2	445	1046M
ZDM4102T	260	15,934	VS2	462	1054M
ZDM4103T	260	9,898	VS2	416	1054M
ZDM4104T	260	11,009	VS2	445	1056M
ZDM4110T	260	14,042	VS2	610	1254M
ZDM4111T	260	17,826	VS2	615	1260M
ZDM4115T	260	15,471	VS2	631	1272M
ZDM4117T	260	19,567	VS2	624	1264M
ZDNM2237T	259	7,089	VS4	242	0932M
ZDNM2238T	259	8,203	VS4	284	0948M
ZDNM2333T	260	9,297	VS4	286	0948M
ZDNM2334T	260	9,390	VS4	405	1056M
ZDNM3581T	259	4,400	VS4	59	0524M
ZDNM3584T	259	4,605	VS4	58	0530M
ZDNM3661T	259	5,427	VS4	104	0632M

Catalog Number	Page Number	List Price	Disc. Sym.	Ship Wgt(1)	Type Code
ZDNM3669T	259	5,078	VS4	95	0624M
ZDNM3767T	259	6,165	VS4	173	0740M
ZDNRPM18054C	251	10,006	RP4	143	–
ZDNRPM18074C	251	10,931	RP4	194	–
ZDNRPM21104C	251	11,125	RP4	280	–
ZDPM18010C-BV	251	16,760	RP2	132	–
ZDPM18015C-BV	251	16,868	RP2	158	–
ZDPM18020C-BV	251	17,622	RP2	180	–
ZDPM18025C-BV	251	18,959	RP2	209	–
ZDPM18030C-BV	251	18,959	RP2	209	–
ZDPM21040-BV	251	17,742	RP2	290	–
ZDPM21050-BV	251	18,141	RP2	325	–
ZDPM21060-BV	251	19,239	RP2	355	–
ZDPM25075-BV	251	27,348	RP2	540	–
ZDPM25100-BV	251	28,294	RP2	605	–
ZDPM28125-BV	251	29,817	RP2	730	–
ZDPM28150-BV	251	31,051	RP2	805	–
ZDVSCP2333T	261	9,837	VS3	374	0944M
ZDVSCP2334T	261	10,447	VS3	388	0960M
ZDVSCP3661T	261	5,978	VS3	135	0632M
ZDVSCP3665T	261	6,486	VS3	128	0642M
ZDVSCP3770T	261	7,514	VS3	201	0738M
ZDVSCP3774T	261	8,223	VS3	218	0748M
ZDVSCP4103T	261	12,497	VS3	481	1054M
ZDVSCP4104T	261	13,420	VS3	494	1056M
ZDVSCP4110T	261	15,391	VS3	762	1254M
ZDVSCP4115T	261	18,187	VS3	757	1272M
ZDVSM2333T	260	8,610	VS3	295	0944M
ZDVSM2334T	260	9,098	VS3	317	0960M
ZDVSM3661T	259	5,374	VS3	118	0632M
ZDVSM3665T	259	5,780	VS3	129	0642M
ZDVSM3770T	259	6,632	VS3	184	0738M
ZDVSM3774T	259	7,795	VS3	210	0748M
ZDVSM4103T	260	10,794	VS3	458	1054M
ZDVSM4104T	260	11,533	VS3	472	1056M
ZDVSM4110T	260	12,874	VS3	716	1254M
ZDVSM4115T	260	15,110	VS3	721	1272M
ZDVSM4314T	260	18,047	VS3	907	A36062M
ZDVSM4316T	260	21,895	VS3	944	A36068M
ZDVSM4400T-4	260	27,476	VS3	1230	A40064M
ZDVSM4406T-4	260	39,349	VS3	1806	A44078M
ZDVSM4407T-4	260	46,106	VS3	2203	A44106M
ZDVSM4408T-4	260	64,003	VS3	2550	A44128M
ZDVSM4410T-4	260	33,426	VS3	1667	A44062M
ZDVSM44304T-4	260	64,003	VS3	2817	A44160M
ZDVSNCP3581T	261	4,620	VS4	65	0524M
ZDVSNCP3584T	261	4,826	VS4	72	0534M
ZDVSNCP3587T	261	5,299	VS4	73	0534M
ZDVSNM2237T	259	6,739	VS4	211	0748M
ZDVSNM2238T	259	8,203	VS4	325	0948M
ZDVSNM2333T	260	9,297	VS4	348	0948M
ZDVSNM3538	259	3,272	VS4	37	3516M
ZDVSNM3542	259	3,372	VS4	38	3518M
ZDVSNM3581T	259	4,400	VS4	59	0524M
ZDVSNM3584T	259	4,605	VS4	70	0534M
ZDVSNM3587T	259	5,078	VS4	66	0534M
ZDVSNM3661T	259	5,448	VS4	111	0636M
ZDVSNM3665T	259	5,865	VS4	124	0642M
ZDWNM22937T	107	9,332	WDW	250	3948M
ZDWNM22938T	107	9,496	WDW	286	3956M
ZDWNM3546T	107	5,116	WDW	44	3524M
ZDWNM3554T	107	5,375	WDW	56	3534M
ZDWNM3609T	107	5,888	WDW	71	3628M
ZDWNM3611T	107	5,943	WDW	90	3640M
ZDWNM3707T	107	6,386	WDW	126	3734M

(1) Shipping weight (lbs.) is approximate.

IEC quick reference chart

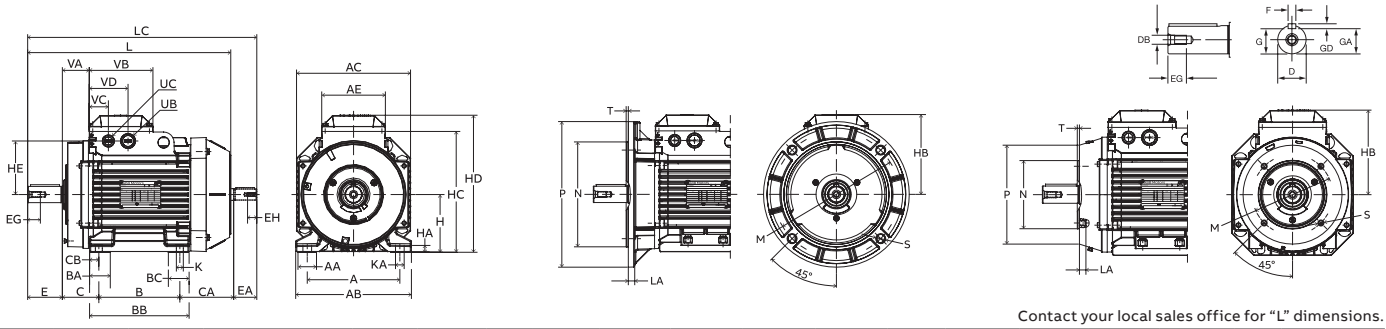

Contact your local sales office for "L" dimensions.

IEC			Foot Mounted				Shaft					B5 Flange				B14 Face		
Frame	A	B	B[1]	H	D	E	DB	EG	LA	M	N	P	S	T	M	N	P	S	T
63	100mm 3.94"	80mm 3.15"	-	63mm 2.48"	11mm 0.43"	23mm 0.91"	M4	10mm 0.39"	10mm 0.39"	115mm 4.53"	95mm 3.74"	120mm 4.72"	7mm 0.28"	3mm 0.12"	75mm 2.95"	60mm 2.36"	90mm 3.54"	M5	2.5mm 0.10"
71	112mm 4.41"	90mm 3.54"	-	71mm 2.80"	14mm 0.55"	30mm 1.18"	M5	12.5mm 0.49"	9mm 0.35"	130mm 5.12"	110mm 4.33"	160mm 6.30"	10mm 0.39"	3.5mm 0.14"	85mm 3.35"	70mm 2.76"	105mm 4.13"	M6	2.5mm 0.10"
80	125mm 4.92"	100mm 3.94"	-	80mm 3.15"	19mm 0.75"	40mm 1.57"	M6	16mm 0.63"	10mm 0.39"	165mm 6.50"	130mm 5.12"	200mm 7.87"	12mm 0.47"	3.5mm 0.14"	100mm 3.94"	80mm 3.15"	120mm 4.72"	M6	3mm 0.12"
90S	140mm 5.51"	100mm 3.94"	-	90mm 3.54"	24mm 0.94"	50mm 1.97"	M8	19mm 0.75"	10mm 0.39"	165mm 6.50"	130mm 5.12"	200mm 7.87"	12mm 0.47"	3.5mm 0.14"	115mm 4.53"	95mm 3.74"	140mm 5.51"	M8	3mm 0.12"
90L	140mm 5.51"	125mm 4.92"	-	90mm 3.54"	24mm 0.94"	50mm 1.97"	M8	19mm 0.75"	10mm 0.39"	165mm 6.50"	130mm 5.12"	200mm 7.87"	12mm 0.47"	3.5mm 0.14"	115mm 4.53"	95mm 3.74"	140mm 5.51"	M8	3mm 0.12"
100	160mm 6.30"	140mm 5.51"	-	100mm 3.94"	28mm 1.10"	60mm 2.36"	M10	22mm 0.87"	11mm 0.43"	215mm 8.46"	180mm 7.09"	250mm 9.84"	15mm 0.59"	4mm 0.16"	130mm 5.12"	110mm 4.33"	160mm 6.30"	M8	3.5mm 0.14"
112	190mm 7.48"	140mm 5.51"	-	112mm 4.41"	28mm 1.10"	60mm 2.36"	M10	22mm 0.87"	11mm 0.43"	215mm 8.46"	180mm 7.09"	250mm 9.84"	15mm 0.59"	4mm 0.16"	130mm 5.12"	110mm 4.33"	160mm 6.30"	M8	3.5mm 0.14"
132	216mm 8.50"	140mm 5.51"	178mm 7.01"	132mm 5.20"	38mm 1.50"	80mm 3.15"	M12	28mm 1.10"	12.5mm 0.49"	265mm 10.43"	230mm 9.06"	300mm 11.81"	15mm 0.59"	4mm 0.16"	165mm 6.50"	130mm 5.12"	200mm 7.87"	M10	3.5mm 0.14"
160	254mm 10.00"	210mm 8.27"	254mm 10.00"	160mm 6.30"	42mm 1.65"	110mm 4.33"	M16	36mm 1.42"	20mm 0.79"	300mm 11.81"	250mm 9.84"	350mm 13.78"	19mm 0.75"	5mm 0.20"	215mm 8.46"	180mm 7.09"	250mm 9.84"	M12	4mm 0.16"
180	279mm 10.98"	241mm 9.49"	279mm 10.98"	180mm 7.09"	48mm 1.89"	110mm 4.33"	M16	36mm 1.42"	20mm 0.79"	300mm 11.81"	250mm 9.84"	350mm 13.78"	19mm 0.75"	5mm 0.20"	–	–	–	–	–
200	318mm 12.52"	267mm 10.51"	305mm 12.01"	200mm 7.87"	55mm 2.17"	110mm 4.33"	M20	42mm 1.65"	20mm 0.79"	350mm 13.78"	300mm 11.81"	400mm 15.75"	19mm 0.75"	5mm 0.20"	–	–	–	–	–
225 S	356mm 14.02"	286mm 11.26"	311mm 12.24"	225mm 8.86"	55mm 2.17"	110mm 4.33"	M20	42mm 1.65"	20mm 0.79"	400mm 15.75"	350mm 13.78"	450mm 17.72"	19mm 0.75"	5mm 0.20"	–	–	–	–	–
225 M	356mm 14.02"	286mm 11.26"	311mm 12.24"	225mm 8.86"	60mm 2.36"	140mm 5.51"	M20	42mm 1.65"	20mm 0.79"	400mm 15.75"	350mm 13.78"	450mm 17.72"	19mm 0.75"	5mm 0.20"	–	–	–	–	–
250 S	406mm 15.98"	311mm 12.24"	349mm 13.74"	250mm 9.84"	60mm 2.36"	140mm 5.51"	M20	42mm 1.65"	24mm 0.94"	500mm 19.69"	450mm 17.72"	550mm 21.65"	19mm 0.75"	5mm 0.20"	–	–	–	–	–
250 M	406mm 15.98"	311mm 12.24"	349mm 13.74"	250mm 9.84"	65mm 2.56"	140mm 5.51"	M20	42mm 1.65"	24mm 0.94"	500mm 19.69"	450mm 17.72"	550mm 21.65"	19mm 0.75"	5mm 0.20"	–	–	–	–	–
280 S	457mm 17.99"	368mm 14.49"	419mm 16.50"	280mm 11.02"	65mm 2.56"	140mm 5.51"	M20	42mm 1.65"	23mm 0.91"	500mm 19.69"	450mm 17.72"	550mm 21.65"	18mm 0.71"	5mm 0.20"	–	–	–	–	–
280 M	457mm 17.99"	368mm 14.49"	419mm 16.50"	280mm 11.02"	75mm 2.95"	140mm 5.51"	M20	42mm 1.65"	23mm 0.91"	500mm 19.69"	450mm 17.72"	550mm 21.65"	18mm 0.71"	5mm 0.20"	–	–	–	–	–
315 S, 2p	508mm 20"	406mm 16"	457mm 18"	315mm 12.4"	65mm 2.56"	140mm 5.51"	M20	40mm 1.57"	25mm 0.98"	600mm 23.62"	550mm 21.65"	660mm 25.98"	23mm 0.91"	6mm 0.24"	–	–	–	–	–
315 S, 4p-8p	508mm 20"	406mm 16"	457mm 18"	315mm 12.4"	80mm 3.15"	170mm 6.69"	M20	40mm 1.57"	25mm 0.98"	600mm 23.62"	550mm 21.65"	660mm 25.98"	23mm 0.91"	6mm 0.24"	–	–	–	–	–
315 M, 2p	508mm 20"	457mm 18"	508mm 20"	315mm 12.4"	65mm 2.56"	140mm 5.51"	M20	40mm 1.57"	25mm 0.98"	600mm 23.62"	550mm 21.65"	660mm 25.98"	23mm 0.91"	6mm 0.24"	–	–	–	–	–
315 M, 4-8p	508mm 20"	457mm 18"	508mm 20"	315mm 12.4"	90mm 3.54"	170mm 6.69"	M24	48mm 1.89"	25mm 0.98"	600mm 23.62"	550mm 21.65"	660mm 25.98"	23mm 0.91"	6mm 0.24"	–	–	–	–	–
355 S, 2p	610mm 24.02"	500mm 19.69"	560mm 22.05"	355mm 13.98"	70mm 2.76"	140mm 5.51"	M20	42mm 1.65"	35mm 1.38"	740mm 29.13"	680mm 26.77"	800mm 31.50"	23mm 0.91"	6mm 0.24"	–	–	–	–	–
355 S, 4-8p	610mm 24.02"	500mm 19.69"	560mm 22.05"	355mm 13.98"	100mm 3.94"	210mm 8.27"	M24	51mm 2.01"	35mm 1.38"	740mm 29.13"	680mm 26.77"	800mm 31.50"	23mm 0.91"	6mm 0.24"	–	–	–	–	–
355 M, 2p	610mm 24.02"	560mm 22.05"	630mm 24.80"	355mm 13.98"	70mm 2.76"	140mm 5.51"	M20	42mm 1.65"	35mm 1.38"	740mm 29.13"	680mm 26.77"	800mm 31.50"	23mm 0.91"	6mm 0.24"	–	–	–	–	–
355 M, 4-8p	610mm 24.02"	560mm 22.05"	630mm 24.80"	355mm 13.98"	100mm 3.94"	210mm 8.27"	M24	51mm 2.01"	35mm 1.38"	740mm 29.13"	680mm 26.77"	800mm 31.50"	23mm 0.91"	6mm 0.24"	–	–	–	–	–
355 L, 2p	610mm 24.02"	630mm 24.80"	710mm 27.95"	355mm 13.98"	70mm 2.76"	140mm 5.51"	M20	42mm 1.65"	35mm 1.38"	740mm 29.13"	680mm 26.77"	800mm 31.50"	23mm 0.91"	6mm 0.24"	–	–	–	–	–
355 L, 4-8p	610mm 24.02"	630mm 24.80"	710mm 27.95"	355mm 13.98"	100mm 3.94"	210mm 8.27"	M24	51mm 2.01"	35mm 1.38"	740mm 29.13"	680mm 26.77"	800mm 31.50"	23mm 0.91"	6mm 0.24"	–	–	–	–	–

Legend: 1 mm = .03937", 1" = 25.40 mm

Horizontal Shaft Arrangements

B3 Foot Mounted.

B5 "D" type flange at drive end, no feet.

B6 Foot wall mount with feet on left hand side when viewed from drive end.

B7 Foot wall mount with feet on right hand side when viewed from drive end.

B8 Ceiling mounted with feet above motor.

B14 "C" type face at drive end, no feet.

Vertical Shaft Arrangements

V1 "D" type flange at drive end, shaft down, no feet.

V3 "D" type flange at drive end, shaft up, no feet.

V5 Vertical foot, wall mounted, shaft down

V6 Vertical foot, wall mounted, shaft up.

V18 "C" type face at drive end, shaft down, no feet.

V19 "C" type face at drive end, shaft up, no feet.

NEMA quick reference chart

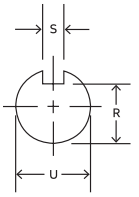

NEMA Shaft (U)	Keyseat Dimensions (R)	Keyseat Dimensions (S)	NEMA Shaft (U)	Keyseat Dimensions (R)	Keyseat Dimensions (S)
3/8	21/64	FLAT	1-7/8	1-19/32	1/2
1/2	29/64	FLAT	2-1/8	1-27/32	1/2
5/8	33/64	3/16	2-3/8	2-1/64	5/8
7/8	49/64	3/16	2-1/2	2-3/16	5/8
1-1/8	63/64	1/4	2-7/8	2-29/64	3/4
1-3/8	1-13/64	5/16	3-3/8	2-7/8	7/8
1-5/8	1-13/32	3/8	3-7/8	3-5/16	1

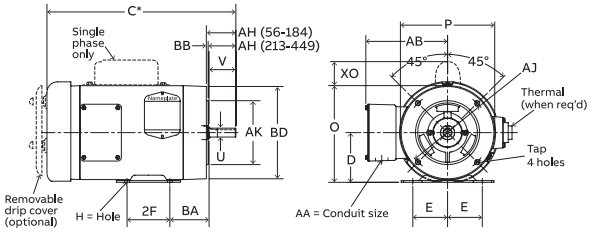

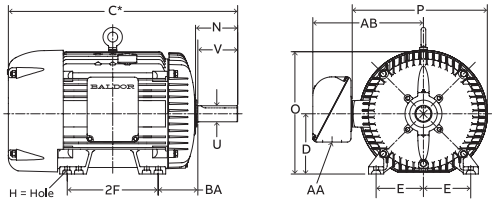

Drawings represent standard TEFC general purpose motors.
*Dimensions are for reference only.

*Contact your local sales office for "C" Dimensions.
Dimensions - N, O, P, AB and XO are specific to Baldor-Reliance®.

NEMA Frame	D	E	2F	H	N	O	P	U	V	AA	AB	AH	AJ	AK	BA	BB	BD	XO	TAP
42	2-5/8	1-3/4	1-11/16	9/32 Slot	1-1/2	5	4-11/16	3/8	1-1/8	3/8	4-1/32	1-5/16	3-3/4	3	2-1/16	1/8	4-5/8	1-9/16	1/4-20
48	3	2-1/8	2-3/4	11/32 Slot	1-7/8	5-7/8	5-11/16	1/2	1-1/2	1/2	4-3/8	1-11/16	3-3/4	3	2-1/2	1/8	5-5/8	2-1/4	1/4-20
56	3-1/2	2-7/16	3	11/32	2-7/16	6-7/8	6-5/8	5/8	1-7/8	1/2	5	2-1/16	5-7/8	4-1/2	2-3/4	1/8	6-1/2	2-1/4	3/8-16
56H			5	Slot	2-1/8														
143T	3-1/2	2-3/4	4	11/32	2-1/2	6-7/8	6-5/8	7/8	2-1/4	3/4	5-1/4	2-1/8	5-7/8	4-1/2	2-1/4	1/8	6-1/2	2-1/4	3/8-16
145T			5																
182			4-1/2		2-11/16			7/8	2-1/4			2-1/8	5-7/8	4-1/2		1/8	6-1/2		3/8-16
184	4-1/2	3-3/4	5-1/2	13/32	2-11/16	8-11/16	7-7/8	7/8	2-1/4	3/4	5-7/8	2-1/8	5-7/8	4-1/2	2-3/4	1/8	6-1/2	2-3/8	3/8-16
182T			4-1/2		3-9/16			1-1/8	2-3/4			2-5/8	7-1/4	8-1/2		1/4	9		1/2-13
184T			5-1/2		3-9/16			1-1/8	2-3/4			2-5/8	7-1/4	8-1/2		1/4	9		1/2-13
213			5-1/2		3-1/2			1-1/8	3			2-3/4							
215	5-1/4	4-1/4	7	13/32	3-1/2	10-1/4	9-9/16	1-1/8	3	1	7-3/8	2-3/4	7-1/4	8-1/2	3-1/2	1/4	9	2-3/4	1/2-13
213T			5-1/2		3-7/8			1-3/8	3-3/8			3-1/8							
215T			7		3-7/8			1-3/8	3-3/8			3-1/8							
254U			8-1/4		4-1/16			1-3/8	3-3/4			3-1/2							
256U	6-1/4	5	10	17/32	4-1/16	12-7/8	12-15/16	1-3/8	3-3/4	1-1/4	9-5/8	3-1/2	7-1/4	8-1/2	4-1/4	1/4	10	—	1/2-13
254T			8-1/4		4-5/16			1-5/8	4			3-3/4							
256T			10		4-5/16			1-5/8	4			3-3/4							
284U			9-1/2		5-1/8			1-5/8	4-7/8			4-5/8							
286U			11		5-1/8			1-5/8	4-7/8			4-5/8							
284T	7	5-1/2	9-1/2	17/32	4-7/8	14-5/8	14-5/8	1-7/8	4-5/8	1-1/2	13-1/8	4-3/8	9	10-1/2	4-3/4	1/4	11-1/4	—	1/2-13
286T			11		4-7/8			1-7/8	4-5/8			4-3/8							
284TS			9-1/2		3-3/8			1-5/8	3-1/4			3							
286TS			11		3-3/8			1-5/8	3-1/4			3							
324U			10-1/2		5-7/8			1-7/8	5-5/8			5-3/8							
326U			12		5-7/8			1-7/8	5-5/8			5-3/8							
324T	8	6-1/4	10-1/2	21/32	5-1/2	16-1/2	16-1/2	2-1/8	5-1/4	2	14-1/8	5	11	12-1/2	5-1/4	1/4	13-3/8	—	5/8-11
326T			12		5-1/2			2-1/8	5-1/4			5							
324TS			10-1/2		3-15/16			1-7/8	3-3/4			3-1/2							
326TS			12		3-15/16			1-7/8	3-3/4			3-1/2							
364U			11-1/4		6-3/4			2-1/8	6-3/8		18	6-1/8							
365U			12-1/4		6-3/4			2-1/8	6-3/8		18	6-1/8							
364T	9	7	11-1/4	21/32	6-1/4	18-1/2	19-1/2	2-3/8	5-7/8	3	18-1/16	5-5/8	11	12-1/2	5-7/8	1/4	13-3/8	—	5/8-11
365T			12-1/4		6-1/4			2-3/8	5-7/8		18-1/16	5-5/8							
364TS			11-1/4		4			1-7/8	3-3/4		18-1/16	3-1/2							
365TS			12-1/4		4			1-7/8	3-3/4		18-1/16	3-1/2							
404U			12-1/4		7-3/16			2-3/8	7-1/8		19-1/4	6-7/8							
405U			13-3/4		7-3/16			2-3/8	7-1/8		19-1/4	6-7/8							
404T	10	8	12-1/4	13/16	7-5/16	21-5/16	22-1/2	2-7/8	7-1/4	3	19-5/16	7	11	12-1/2	6-5/8	1/4	13-7/8	—	5/8-11
405T			13-3/4		7-5/16			2-7/8	7-1/4		19-5/16	7							
404TS			12-1/4		4-1/2			2-1/8	4-1/4		19-5/16	4							
405TS			13-3/4		4-1/2			2-1/8	4-1/4		19-5/16	4							
444U			14-1/2		8-5/8	24.24	27.57	2-7/8	8-5/8	3	22.68	8-3/8							
445U			16-1/2		8-5/8	24.24	27.57	2-7/8	8-5/8	3	22.68	8-3/8							
444T			14-1/2		8-9/16	24.24	27.57	3-3/8	8-3/8	4	22.68	8-1/4							
445T			16-1/2		8-9/16	24.24	27.57	3-3/8	8-3/8	4	22.68	8-1/4							
447T	11	9	20	13/16	8-9/16	24.24	27.57	3-3/8	8-3/8	4	23.86	8-1/4	14	16	7-1/2	1/4	16-3/4	—	5/8-11
449T			25		8-9/16	24.24	27.57	3-3/8	8-1/2	4	23.86	8-1/4							
444TS			14-1/2		4-13/16	24.24	27.57	2-3/8	4-5/8	4	22.68	4-1/2							
445TS			16-1/2		4-13/16	24.24	27.57	2-3/8	4-5/8	4	22.68	4-1/2							
447TS			20		4-13/16	24.24	27.57	2-3/8	4-5/8	4	23.86	4-1/2							
449TS			25		4-13/16	24.24	27.57	2-3/8	4-3/4	4	23.86	4-1/2							
586T			22		13-3/8	38-1/4	29-3/8	3-7/8	11-5/8	3	23-3/4								M24x2.125
587T			25		13-3/8	38-1/4	29-3/8	3-7/8	11-5/8	3	23-3/4								M24x2.125
588T			28		13-3/8	38-1/4	29-3/8	3-7/8	11-5/8	4	23-3/4								M24x2.125
586TZ	14-1/2	11-1/2	22	1-1/4	13-3/8	38-1/4	29-3/8	4-3/8	11-5/8	3	23-3/4	—	—	—	10	—	—	—	M24x2
587TZ			25		13-3/8	38-1/4	29-3/8	4-3/8	11-5/8	3	23-3/4								M24x2
586TS			22		6-1/2	38-1/4	29-3/8	2-3/8	4-3/4	3	23-3/4								M20x1.7
587TS			25		6-1/2	38-1/4	29-3/8	2-3/8	4-3/4	3	23-3/4								M20x1.7

U Frame TS Frame

The above chart provides typical legacy Baldor-Reliance® motor dimensions. For more exact dimensional data, please check the specific drawing for each catalog number. NEMA states only a minimum value for AA dimension. AA dimensions shown in chart are legacy Baldor-Reliance typical values meeting or exceeding NEMA. Please check motor drawing for actual dimensions.

Frame L449T is not included in this chart. Please refer to the Large AC motor chart, or to the specific motor drawings for L449T dimensions.

NEMA C-Face	BA Dimensions
143-5TC	2-3/4
182-4TC	3-1/2
213-5TC	4-1/4
254-6TC	4-3/4

Frame	D	E	F	N	U	V	BA
			NEMA frames prior to 1953				
66	4-1/8	2-15/16	2-1/2	2-1/4	3/4	2-1/4	3-1/8
203	5	4	2-3/4	2-7/16	3/4	2	3-1/8
204			3-1/4				
224	5-1/2	4-1/2	3-3/8	3-1/4	1	3	3-1/2
225			3-3/4				
254	6-1/4	5	4-1/8	3-7/16	1-1/8	3-3/8	4-1/4
284	7	5-1/2	4-3/4	4-1/4	1-1/4	3-3/4	4-3/4
324	8	6-1/4	5-1/4	5-3/8	1-5/8	4-7/8	5-1/4
326			6				
364	9	7	5-5/8	5-5/8	1-7/8	5-3/8	5-7/8
365			6-1/8				
404	10	8	6-1/8	6-3/8	2-1/8	6-1/8	6-5/8
405			6-7/8				
444	11	9	7-1/4	7-1/8	2-3/8	6-7/8	7-1/2
445			8-1/4				
504	12-1/2	10	8	8-5/8	2-7/8	8-3/8	8-1/2
505			9				

ABB Motors and Mechanical Inc., P.O. Box 2400, Fort Smith, AR 72902-2400, U.S.A.

Large AC quick reference chart

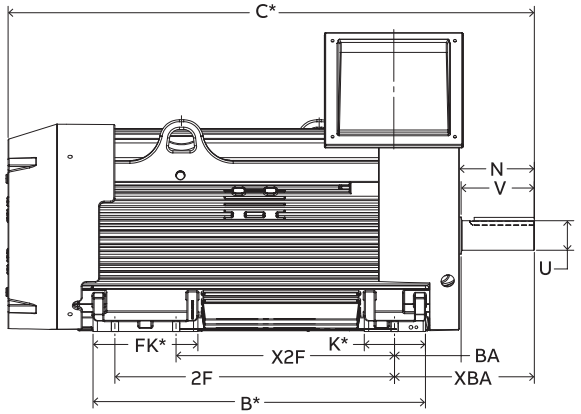

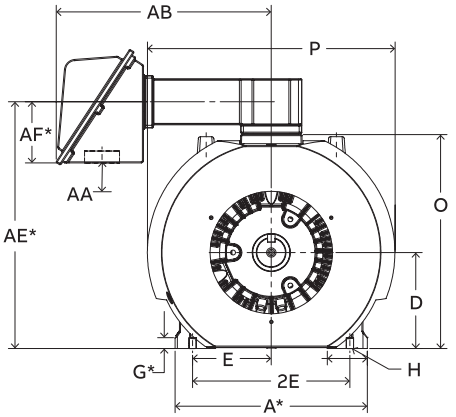

Drawings represent standard large AC TEFC motors.

***Dimensions are for reference only.**

***Contact your local sales office for "C" dimensions.**
Dimensions - N, O, P and AB are specific to legacy Baldor-Reliance® motors.

Frame	D	E	Dual foot mount holes 2F	Dual foot mount holes X2F	H	N	O	P	U	V	AA	AB	BA	XBA
L449TS	11	9	32	25	13/16	4.84	24.49	28.32	2 3/8	4 3/4	4.60	26.86	7 1/2	–
L449T						8.56			3 3/8	8 3/8				
5008S						6.44			2 3/8	6				15 1/2
5008L	12 1/2	10	25	22	15/16	10.44	27.25	32.46	4 1/8	10	–	30.28	–	19 1/2
5008L						10.44			4 1/2	10				19 1/2
5010S						6.44			2 3/8	6				15 1/2
5010L	12 1/2	10	32	28	15/16	10.44	27.25	32.46	4 1/8	10	–	30.28	–	19 1/2
5010L						10.44			4 1/2	10				19 1/2
5012L	12 1/2	10	40	36	15/16	10.44	27.25	32.46	4 1/8	10	–	30.28	–	19 1/2
5012L						10.44			4 1/2	10				19 1/2
5810S						7.84			2 3/8	6 1/2				17
5810L	14 1/2	11 1/2	36	32	1 7/8	14.53	32.31	36.86	4 1/8	13	–	32.05	–	23 11/16
5810L						14.53			4 1/2	13				23 11/16

The above chart provides typical legacy Baldor-Reliance motor dimensions.
For more exact dimensional data, please check the specific drawing for each catalog number.
AA dimension shown in chart are legacy Baldor-Reliance typical values.
Customer to drill hole in terminal box for frames larger than 449.
Dimensions are in inches.
If mounting clearance details are required, consult factory.

ABB Motors and Mechanical Inc., P.O. Box 2400, Fort Smith, AR 72902-2400, U.S.A.

Catalog notes

1. Class F insulated motor with 1.15 service factor or higher that operates within Class “B” temperature limits at rated horsepower.
2. 1.00 service factor
3. Capacitor start, induction run
5. Belted duty only, roller bearing
6. F-2 mounting
7. Copper bar rotor
8. Class “H” Insulated
9. Metric frame dimensions
10. Non-stock, built on demand.
11. F-3 mounting
12. 1.25 service factor
13. 1.35 service factor
14. 1.00 service factor, Class F rise
15. Small Motor Rule compliant. Average efficiency.
16. Motor can no longer be produced as of June 1, 2016. The Integral Horsepower Rule allows for existing inventory of this motor built prior to June 1, 2016 to be sold until inventory is depleted.
17. Capable of 100% thrust in either direction.
18. Motors are rated for Division 2, Class I, Groups C&D only.
19. 60/50 Hertz motor. 60 Hertz data shown, contact your local sales office for 50 Hertz data.
20. Class F insulation
21. Stage 3 EU MEPS
22. Non-encapsulated winding
24. Part winding start or DOL
25. Wye start, delta run or DOL
27. Motors have ball bearing suitable for coupled loads. If load is belted, a roller bearing may be required, contact your local sales office.
29. V-dimension is 2.5”
30. Usable at 208 volts
31. Design D
33. Voltage @ 60 Hz
35. Design A, exceeds Design B inrush limits.
36. Can mount as NEMA 56, 143T & 145T frames with NEMA 56 frame shaft dimensions.
37. Can mount as NEMA 56, 143T & 145T frames with NEMA 143T-145T frame shaft dimensions.
38. Motor not suitable for inverter use.
40. Brake motors may be mounted for vertical mounting with brake below motor.
41. Brake motors may be mounted for vertical mounting with brake above or below motor.
42. Brake motors must be modified for vertical mounting. Springs included with brake.
45. Horizontal mount, no C-Face. May be converted to C-Face in Mod Express® or built as custom motors.
46. Includes 1024 ppr encoder
47. BA dimension does not meet NEMA standards.
48. Includes phase insulation. Suitable for use on inverter.
50. Voltage @ 50 Hz, usable on 460 Volt 60 Hz
51. Full Load Amps @ 400 Volt nominal - 50 Hz
52. IP55 enclosure
53. Tungsten carbide outer seal
56. Legacy Reliance® E-Line motor design. Has F1 side mounted conduit box. Single frame mounting holes in 447 & 449 frame sizes.
57. Can mount as NEMA 145T frame with 145T frame shaft dimensions.
59. Suitable for operation @ 415V, 50 Hz
60. Totally-enclosed, non-ventilated, continuous duty.
63. Foot also drilled for 447T frame mounting.
64. Motors include 100 ohm platinum winding RTDs and space heaters.
65. Capacitor start, capacitor run (two value capacitor)
66. Resilient mount single phase motors with moderate starting torque for fan applications
67. NEMA 48 Base Mount, not swivel mount
68. 3 lead
69. 6 lead suitable for part winding start on 200 volts
70. Constant velocity fan: 230/460 volts, three phase
71. Nominal efficiency is based at the 1800 RPM (High RPM) and low speed efficiency is available just not published.
73. SCR motors with a 3:1 constant torque speed range.
74. V-dimension is 3”.
77. Inverter duty.
78. Furnished without conduit box. (Order kit BK2400)
80. Motor has thermostat and provisions for adding flange mounted tach.
81. 230/460V 3Φ motor, 200/400V 3Φ motor or 115/230V 1Φ motor connected for voltage shown. Can be reconnected for other voltage.
82. Single voltage motor. Cannot reconnect.
83. May be operated on 50Hz rectified power supply with full nameplate rating. AC supply voltage must be same as 60Hz supply; i.e., either 230 or 460 volts. Motor nameplate is stamped D-50/60. Motor mounted blower may be added to DPG enclosure.
84. May be operated on 50Hz rectified power supply with full nameplate rating only when motor is force ventilated with motor mounted blower. AC supply voltage must be same as 60Hz supply.
85. Cannot be operated at full nameplate rating on 50Hz rectified power supply.
87. Motor has thermostat and provisions for adding adapter mounted tach.
88. Sleeve bearings - coupled loads only
89. Cooling fan on each end
90. Foot mounted and 180TC face
91. Foot mounted and 210TC face
92. Foot mounted and 250TC face
93. Foot mounted only
94. Foot mounted only. These stock models include VPI insulation on L440 only, insulated ODE bearing, shaft ground brush, and stator RTD's.
95. Foot mounted only. Includes filter, VPI, insulated ODE bearing and two sets of thermostats.
96. UL Recognized thermal protection
97. One size smaller flange and shaft
99. G-Series motor design. Has F3 Lead outlet in frame and an arm mounted conduit box for F1 & F2 Lead Location. Dual Frame mounting holes in 445/447 and 447/449 frames.
100. Motor will be discontinued once inventory is depleted
101. Blower on drive end
102. Force vent with blower and filter. Full nameplate rating on 50 Hz rectified power, AC supply voltage must be same as 60 Hz supply.
103. Force vent with blower, full nameplate rating on 50 Hz rectified power. AC supply voltage must be same as 60 Hz supply, thermostats and tach provisions.
104. Force vent with blower, cannot run full nameplate on 50 Hz rectified power, thermostats and tach provisions.
105. Force vent with blower on drive end filter, thermostats and tach provisions.
106. Suitable for sinewave operation
107. Uses HS25 encoder, 1024 PPR

—

ABB Motors and Mechanical Inc.
5711 RS Boreham Jr. Steet
Fort Smith, AR 72901
Ph: 1.479.646.4711

baldor.abb.com

© Copyright 2022 ABB. All rights reserved.
Specifications subject to change without notice.

501 02/22